YAMAICHI ELECTRONICS

ENGINEERED TO CONNECT

CONNECTORS AND SOCKETS

CONNECTOR SOLUTIONS

The technical data and specifications of the products shown in this catalogue are for reference only, and apply to products available at the time of catalogue printing in Nov. 2012. Product modification often involves changes to technical data and size, and it is therefore recommended that the buyer request the latest technical data and specifications before placing a purchasing contract.

Technische Daten und Massangaben der im Katalog aufgeführten Produkte beziehen sich auf Referenzprodukte aus dem Produktsortiment bei Erscheinen des Katalogs im Nov. 2012 Produktänderungen, insbesondere aufgrund technischer Weiterentwicklung, bedingen regelmäßig veränderte technische Daten und Maße. Dem Besteller wird daher dringend empfohlen, vor Vertragsabschluss technische Daten und Massangaben gesondert nachzufragen.

COMPANY PROFILE

WORLDWIDE

Yamaichi Electronics, as a supplier of high performance interconnection devices was established 1956 in Tokyo. Yamaichi rapidly achieved world class status as a manufacturer of high quality and reliable components, for use in the most demanding applications of electronic systems, including those with high temperature environments, protected interconnections for harsh environments, high speed interconnections for the Telecom/Datacom infrastructure or robust and long-living solar panel cabling systems.

Yamaichi uses state-of-the-art automated production and assembly equipment to produce high precision fine pitch sockets, connectors, cable assemblies and flexible printed circuits with consistent quality and reliability.

With nearly 5,000 employees and more than 70,000 m^2 of manufacturing space in Japan, the Philippines, South Korea, China and Germany, Yamaichi can provide its customers with conventional and custom products in the most favorable combination of price, quality and delivery.

EUROPE

Yamaichi Electronics Deutschland GmbH is located in Munich and is your European partner for sockets, connectors, cables / assemblies, PCB designs as well as fine pitch flexible printed circuits. Our network includes a knowledgeable and experienced sales staff in Germany, Italy, the UK and France. Also we are supported by a European network of exclusive distributors. (Contact addresses at the end of this catalogue).

In order to facilitate the local market demands, Yamaichi has two Design Centers in Munich and Sousse (Tunisia). Our expertise covers the factory automation, wireless communication, telecom/datacom, semiconductor, photovoltaic, medical, automotive and other technologies. Moreover we offer PCB design services as well as cable assemblies from our production facility in Northern Germany.

Quality Assurance
Yamaichi places great importance on Quality. As the European subsidiary, it is our target to meet the high quality requirements set by the Yamaichi Group. For this reason, we started many years ago with a continuous improvement program. Yamaichi is approved according to the current DIN EN ISO 9001:2008.

YAMAICHI ELECTRONICS
ENGINEERED TO CONNECT

TABLE OF CONTENTS

CARD CONNECTORS

SD and MMC
microSD
Compact Flash
SIM and microSIM
Combination Connectors
PCMCIA II

HIGH SPEED CONNECTORS

AdvancedMC Connectors for AdvancedTCA and MicroTCA
High Speed Connector and Cable System
Miniature Connectors for Coxial Cables
High Speed Mezzanine Connectors
CFP Mechanical Unit for Telecom/Datacom

INTERNAL CONNECTORS

Y-Lock Pullforce Connector / Cable System
Board-to-Cable and Board-to-Board
ZIF Connectors for FFC / FPC
FFC (Flexible Flat Cable)

I/O CONNECTORS

USB and IEEE1394
HDMI
DVI
SAS
Earphone and Modular Jacks
Mini Delta Ribbon
D-Sub (HD and Standard)
MiniDIN
SCSI-2, -3 and -4

CABLES AND ASSEMBLIES

Cable Assembly
Flat Cables
Flat / Round Cables
Round Cables (Multi Twisted Pairs)

PRODUCTION SOCKETS

Quad Flat Packages
Dual Inline Packages
Arrays

CARD CONNECTORS

		SERIES	PAGE
	Compatible Flash Memory Cards for Yamaichi Connectors		17
SD and MMC	SD and MMC Card Reader, Push/Push - Small Size (ht = 3.1mm)	FPS	18
	SD and MMC Card Reader, Push/Push - Low Profile (ht = 2.8mm)	FPS	20
	SD and MMC Card Reader, Push/Push - Low Profile (ht = 2.8mm)	FPS	22
	SD and MMC Card Reader, Push Push for Automotive	FPS	24
	SD and MMC Card Reader, Push/Push - Reversed Type	FPS	26
	SD and MMC Card Reader, Special Switch Position (Top Mount)	FPS	28
	SD and MMC Card Reader, Special Switch Position (Reversed Type)	FPS	30
	SD and MMC Card Reader, Manual Insertion	FPS	32
	SD and MMC Card Reader, Manual Insertion (Short Type)	FPS	34
	SD and MMC Card Reader, One Action Lock Type	FPS	35
microSD	microSD Card Adapter, microSD-to-SD	PJS	36
	microSD Card Reader, Push/Push (Top Mount)	PJS	37
	microSD Card Reader, Push/Push (Reversed Type)	PJS	38
	microSD Card Reader, Push/Push (Top Mount)	PJS	39
	microSD Card Reader, Manual Insertion (Vertical Type)	PJS	40
	microSD Card Reader, (Hinge Type)	PJS	41
microSIM	microSIM Card Raeader, Pull Eject Type (ht. =1.34mm)	FUS	42
SIM	SIM Card Reader, Push/Push Standard Type (w. and w/o. Switch)	FMS	43
	SIM Card Reader, Push/Push Ejector Reversed Type (w. and w/o. Switch)	FMS	44
	SIM Card Reader, Push/Lock Ejector (Standard w/o. Switch)	FMS	45
	SIM Card Reader, Push/Push Ejector Low Profile (Standard w/o. Switch)	FMS	46
	SIM Card Reader, Push/Push Ejector Low Profile (with Switch)	FMS	47
	SIM Card Reader, Removable Tray Top Mount	FMS	48
	SIM Card Reader, Removable Tray Reversed Type	FMS	49
	SIM Card Reader, Small Size Low Profile (ht =1.40mm) Manual Insertion	FMS	50
	SIM Card Reader, Standard Type Manual Insertion (without Switch)	FMS	51
	8 Pin SIM Card Reader, Manual Insertion (with Separate Switch)	FMS	52
	8 Pin SIM Card Reader, Push/Push Ejector (with Switch)	FMS	53
Combo Connectors	2-in-1 microSD / SIM (Push/Push and Manual)	FRS	54
	3-in-1 SD / MMC / MS Duo Card Reader (Top Mount)	FRS	55
	3-in-1 SD / MMC / MS Duo Card Reader (Push/Push)	FRS	56
	3-in-1 SD / MMC / HG Duo Card Reader (Push/Push)	FRS	57

CARD CONNECTORS

		SERIES	PAGE
Compact Flash	Compact Flash Card Reader, Type I (with/without Ejector)	CF	58
	Compact Flash Card Reader, Type I and II (Ejector Optional)	CF	59
	Compact Flash Card Reader, Type I and II (Reversed Type)	CF	60
	Compact Flash Card Reader, Slim Type I (without Ejector)	CF	61
	Compact Flash Card Reader, Slim Type I (Reversed Type)	CF	62
	Compact Flash Card Reader, Slim Type I and II	CF	63
	Compact Flash Card Reader, Slim Type I and II (Reversed Type)	CF	64
	Compact Flash Card Reader, Locking Mechanism	CF	65
PCMCIA II	TH - PCMCIA II Slot, Single Deck	CNT	66
	TH - PCMCIA II Slot, Double Deck	CNT	68
	SMT - PCMCIA II Slot, Single Deck	CNS	70
	SMT - PCMCIA II Slot, Double Deck	CNS	72

HIGH SPEED CONNECTORS

AdvancedMC Connectors for AdvancedTCA and MicroTCA

		SERIES	PAGE
AdvancedMC	Introduction AdvancedCMT - Compression Mount Technology	Info	77
	Introduction ATCA and MicroTCA Technology	Info	78
AdvancedTCA	AdvancedMC Connector for AdvancedTCA	CN074	79
	AdvancedMC Connector, for ATCA (Type B)	CN074	80
	AdvancedMC Connector, for ATCA (Type B+)	CN074	81
	AdvancedMC Connector, for ATCA (Type AB)	CN074	82
	AdvancedMC Connector, for ATCA (Type A+B+)	CN074	83
	AdvancedMC Connector, for ATCA (Type A+B+ mid size)	CN074	84
MicroTCA	Introduction AdvancedMC Connector for MicroTCA	CN080	85
	AdvancedMC Connector, for MicroTCA	CN080	86
	MCH Plug (MicroTCA Carrier Hub)	CN084	87
microTCA	Power Connectors for MicroTCA	CNU009	88
AdvancedTCA	Power Connectors for AdvancedTCA	CNU004	89

HIGH SPEED CONNECTORS

		SERIES	PAGE
Non-ZIF Connectors for High Speed Cable			
HF507	Introduction Non-ZIF for High Speed Connector System	HF507S	90
	90° Non-ZIF Direct Mating Type for High Speed Cable (0.50mm Pitch)	HF507S	91
	180° Non-ZIF Socket for High Speed Cable (0.50mm Pitch)	HF507S	92
	90° Non-ZIF Socket for High Speed Cable (0.50mm Pitch)	HF507S	93
	YFLEX Cable for Series HF507S	YFB	94
	Non-ZIF Adapter Plug for Discrete Wire, HF507S Series	HF507P	95
	Shielded High Speed FFC for HF507S Series (0.5mm Pitch)	YFT	96
	Flexible Flat Cable (0.5mm Pitch)	HF601	97
	90° ZIF Connector Flip Type, SMT (0.5mm Pitch)	HF601	98
	180° ZIF Connector Flip Type, SMT (0.5mm Pitch)	HF601	99
	90° ZIF High Speed Connector 22 Pin Flip Type, SMT (0.5mm Pitch)	HF601	100
	High Speed Cable for 22 Pins (0.5mm Pitch)	HF601	101
	90° ZIF Connector Flip Type, SMT (0.5mm Pitch)	HF509	102
Miniature Connectors for Coxial Cables			
HF201	Miniature Connectors for Coxial Cables	HF201P	103
	Cable Sockets for HF201P	HF201S	104
CFP for 100 Gbps Ethernet			
CA009	CFP Mechanical Unit and Connectors	CA009	105
QSFP Connector			
CN120	QSFP Host Connector	CN120	106

INTERNAL CONNECTORS

		SERIES	PAGE
Board Edge Connectors			
BEC	Board Edge Connector 230 Pins (SMT)	BEC	110
Y-Lock Pullforce Connector / Cable System			
Y-LPF-C	Y-Lock Pullforce Connector and Cable System - Introduction		112
	180° SMT Y-Lock Pullforce Connector (0.50mm Pitch)	Y-LPF-C	113
	180° SMT Y-Lock Pullforce Connector (1.00mm Pitch)	Y-LPF-C	114
	90° SMT Y-Lock Pullforce Connector (1.00mm Pitch)	Y-LPF-C	115
Y-LPF-F	Y-Lock Pullforce Locking Cable System (0.50mm and 1.0mm Pitch)	Y-LPF-F	116
ZIF Connectors for FFC / FPC			
FPC / FC	Flexible Flat Cable, 0.50mm and 1.00mm Pitch	FC-P	117
	180° SMT ZIF for Flexible Flat Cable / Flexible Printed Circuit (1.00mm Pitch)	FPC-96	118
	90° SMT ZIF for Flexible Flat Cable / Flexible Printed Circuit (1.00mm Pitch)	FPC-96	119
	180° SMT ZIF for Flexible Flat Cable / Flexible Printed Circuit (0.50mm Pitch)	FPC-98	120
	90° SMT ZIF for Flexible Flat Cable / Flexible Printed Circuit (0.50mm Pitch)	FPC-98	121

Board-to-Cable and Board-to-Board

2.54mm Pitch

		SERIES	PAGE
FA	180° / 90° MIL Std. Latch Header Plug	FAP	122
	180° / 90° MIL Std. Box Header Plug	FAP	124
	IDC Type Socket, MIL Std.	FAS	126
	IDC - Socket (2-Point Contact)	FAS	128
FG	PC Board Transition Header (2 Rows)	FGP	129
UF	Crimp Type Socket (Double Row, Polarity Key)	UFS	130
	Crimp Contacts, Crimp tool and Polarity Keys (Accessories)	UFS	131
FP	180° / 90° TH Pin Header Single and Dual Row	FP2	132
	180° SMT Pin Header Single and Dual Row	FP4	133
	180° SMT Box Header Dual Row	FP7	134
	180° / 90° THBox Header Dual Row	FP7	135
	180° SMT Male Header Dual Row	FP8	136
FS	90° IDC Socket	FS1	137
	180° TH Female Header Single and Dual Row (ht = 7.1mm)	FS3	138
	180° SMT Female Header Single and Dual Row (ht = 7.1mm)	FS5	139

2.00mm Pitch

ZJ	Mini-Jumper	ZJ1	140
ZP	IDC Transition Plug	ZP1	141
	Various Pin Headers (1.5mm Base)	ZP2	142
	Header for SMT (Various Heights)	ZP4	143
	180° / 90° TH Dual Row Box Header	ZP7	144
	180° SMT Dual Row Box Header	ZP7	145
	180° Active Eject Pin Header	ZP8	146
	90° Active Eject Pin Header	ZP9	147
ZS	IDC Socket with / without Polarization Bump	ZS1	148
	180° TH Socket for PCB Mount	ZS3A	149
	90° TH Socket for PCB Mount	ZS4A	150
	180° SMT Socket	ZS5A	151
	180° SMT Low Profile (2.5mm ht.) Socket	ZS6A	152
	Connections for Various Heights and Pin Counts (Board-to-Board)	ZS5A / ZP4	153

Board-to-Cable and Board-to-Board (cont'd)

1.27mm Pitch

		SERIES	PAGE
NP/ NS	180° / 90° TH Pin Header, Single and Dual Row	NP2	154
	180° SMT Pin Header, Single and Dual Row	NP4	155
	180° / 90° TH Box Header, Dual Row	NP7	156
	180° SMT Box Header, Dual Row	NP7	157
	180° TH Female Box Header, Dual Row	NS3	158
	180° SMT Female Header, Dual Row	NS5	159
MatchCon	180° TH Female Box Header w. and w/o. Lock	MBS	160
	180° SMT Female Box Header w. and w/o. Lock	MBS	161
	180° TH Male Box Header without Lock	MBP	162
	90° TH Female Box Header w. and w/o. Lock	MBS	163
	90° TH Male IDC Paddle Type	MCP	164
	90° Male IDC for Flat Cable	MCP	165
NF	90° Solder Dip Latch Header Plug	NFP	166
	180° Solder Dip Latch Header Plug	NFP	167
	IDC Type Socket	NFS	168
	IDC Transition Header	NFP	169
	90° Solder Dip Box Header	NFP	170
	180° Solder Dip Box Header	NFP	171
ND	90° Solder Dip Plug	NDP	172
	180° Solder Dip Plug	NDP	173
	90° SMT Type Plug (50 Leads)	NDP	174
	90° Solder Dip Socket	NDS	175
	180° Solder Dip Socket	NDS	176
	180° SMT Type Socket (50 Leads)	NDS	177
	NDS - NDP Connection Patterns	NDS / NDP	178

0.50mm Pitch

RD	180° SMT Female Header	RDS	179
	180° SMT Male Header	RDP	180

BoardFit 3.0mm and 4.2mm Power Connectors

3.0mm Pitch

BoardFit3.0	180° and 90° TH Male Header 3.00mm Pitch (Single Row)	P3BP	181
	180° and 90° TH Male Header 3.00mm Pitch (Dual Row)	P3BP	182
	180° SMT Male Header 3.00mm Pitch (Single and Dual Row)	P3BP	183
	90° SMT Male Header 3.00mm Pitch (Single and Dual Row)	P3BP	184
	180° Male Cable 3.00mm Pitch (Single & Dual Row)	P3CP	185
	180° Female Cable 3.00mm Pitch (Single & Dual Row)	P3CS	186

4.2mm Pitch

BoardFit4.2	180° and 90° TH Male Header 4.20mm Pitch (Dual Row)	P4BP	187
	Male Cable Power Connector 4.20mm (Single & Dual Row)	P4CP	188
	Crimp Contacts - Male Cable Power Connector 4.20mm)	P4CP	189
	Female Cable Power Connector 4.20mm (Single & Dual Row)	P4CS	190
	Crimp Contacts - Female Cable Power Connector 4.20mm)	P4CS	191

		SERIES	PAGE
microUSB / USB / miniUSB and IEEE	micro USB3.0 Type AB, 10 Pin Female PCB R/A (SMT)	Micro USB-AB3.0	194
	micro USB3.0 Type B, 10 Pin Female PCB R/A (SMT)	Micro USB-B3.0	195
	micro USB3.0 Type A, 10 Pin Male Solder Plug Type	Micro USB-A3.0	196
	micro USB3.0 Type B, 10 Pin Male Solder Plug Type	Micro USB-A3.0	197
	USB3.0 Type A, 9 Pin Female PCB R/A (SMT)	USB-A3.0	198
	USB3.0 Type A, Single Port - 9 Pin Female Dip Type (SMT)	USB-A3.0	199
	USB3.0 Type A, Dual Port - 9 Pin Female Dip Type (TH)	USA-A3.0	200
	USB3.0 Type A, 9 Pin Male Solder Plug Type	USB-A3.0	201
	USB3.0 Type B, 9 Pin Female PCB 180° (TH)	USB-B3.0	202
	USB3.0 Type B, 9 Pin Female PCB R/A (TH)	USB-B3.0	203
	USB3.0 Type B, 9 Pin Male Solder Type	USB-B3.0	204
	Matching Cables for Type A - 9 Pin	USB-A3.0	205
	Universal Serial Bus, Type A - 90° Receptacle (TH Single Port)	USB-A	206
	Universal Serial Bus, Type A - 90° Receptacle (TH Dual Port)	USB-A	207
	Universal Serial Bus, Type A - 90° Receptacle (TH)	USB-A	208
	Universal Serial Bus, Type A - 180° Receptacle (TH)	USB-A	209
	Universal Serial Bus, Type A - 90° Receptacle (TH Single Port)	USB-A	210
	Universal Serial Bus, Type A - Plug	USB-A	211
	Universal Serial Bus, Type A - with Power Receptacle (PCB Mounting)	USB-APOWER	212
	Universal Serial Bus, Type A - with Power Plug (Solder Type)	USB-APOWER	213
	Universal Serial Bus, Type B - 90° Receptacle (TH)	USB-B	214
	Universal Serial Bus, Type B - 180° Receptacle (TH)	USB-B	215
	Universal Serial Bus, Type B - Plug	USB-B	216
	Mini Universal Serial Bus, 90° Receptacle (8 Pin PCB, SMT Type)	USB-M	217
	Mini Universal Serial Bus, 180° Receptacle (8 Pin Solder Port)	USB-M	218
	Mini Universal Serial Bus, 90° Receptacle (5 Pin SMT)	USB-M	219
	Mini Universal Serial Bus, Plug (5 Pin Solder Port Type)	USB-M	220
	Mini Universal Serial Bus, 90° Receptacle (4 Pin SMT)	USB-M	221
	Mini Universal Serial Bus, Plug (4 Pin Solder Port Type)	USB-M	222
	Micro Universal Serial Bus, Type A Plug (5 Pin Solder Type)	USB-MC5	223
	Micro Universal Serial Bus, Type AB - 90° Receptacle (5 Pin PCB R/A) SMT	USB-MC5	224
	Micro Universal Serial Bus, Type B - 90° Receptacle (5 Pin PCB R/A) SMT	USB-MC5	225
	Micro Universal Serial Bus, Plug (5 Pin Solder Type)	USB-MC5	226
	IEEE1394 (Fire Wire) , Plug and Receptacle	IEEE1394	227
HDMI	90° HDMI Connector for PCB (SMT Type 3 and 4)	HDMI	228
	90° HDMI Connector for PCB (SMT Type 5)	HDMI	229
DVI	90° DVI Receptacle Connector Solder Dip	DVI	230
	180° DVI Receptacle Connector Solder Dip	DVI	231
	DVIP / VGA Adapter	DVI	232
	DVI-to-DVI Single Link Connector / Cable Assembly	DVI	233
SAS	180° SAS Connector 29 Pin (DIP Type)	SAS	234
	180° SAS Connector 29 Pin (SMT / DIP Type)	SAS	235
SCSI-2/-3	IDC Type Plastic Plug for Internal Use (1.27mm Pitch)	NHP	236
	IDC Type Socket with Latch Blocks (1.27mm Pitch)	NHS	237
	IDC Type Socket without Latch Blocks (1.27mm Pitch)	NHS	238
	IDC Type Plugs (1.27mm Pitch, Cable ⌀0.8 to 1.1mm)	NCP	239
	90° Solder Dip Sockets (PCB - Hook Lock)	NCS	240
Mini Delta Ribbon (MDR)	90° Solder Dip Sockets - Dual Port	NCS	241
	Covers Cross-Reference (SCSI-2/-3 and Mini Delta Ribbon)	NC / NH	242
	Metal Covers (180° Cable Exits)	NHA	243

INPUT / OUTPUT CONNECTORS

		SERIES	PAGE
SCSI-4 with Covers	90° Solder Dip Socket (0.80mm Pitch)	RCS	245
	IDC Type Plug, 1 Side / 4 Rows (0.80mm Pitch)	RCP	246
	Metal Covers, 1 Side / 4 Rows	RCA	247
High Density D-Sub (3 Rows)	180° Solder Cup (Male)	CT	248
	180° Solder Cup (Female)	CT	249
	180° Solder Dip (Male)	CT	250
	180° Solder Dip (Female)	CT	251
	90° Solder Dip (Male, PCB-Snap-in)	CT	252
	90° Solder Dip (Female, PCB-Snap-in)	CT	253
	90° Solder Dip - Slim Line (Female, 2.50mm)	CT	254
	90° SMT Type - Low Profile (Female)	CT	255
Standard D-Sub	180° Solder Cup (Male / Female)	DS	256
	180° Solder Dip (Male / Female)	DD	257
	90° Solder Dip (Male / Female)	DR	258
	90° Solder Dip - Short Distance (Male / Female)	DRS	259
	90° SMT Type (Male)	DSM	260
	90° SMT Type (Female)	DSM	261
	IDC Type (Male / Female) for Flat Cable	DF	262
	90° Solder Dip with Filter (Male / Female)	DRF	263
	Dual Port Solder Dip	DDP	264
	Mixed Dual Port Solder Dip (Male and Female Combination)	DDP	265
	Plastic and Metal Hoods (High Density and Standard)	FK / FP	266
	Plastic and Metal Hoods (High Density and Standard)	FK / FM	267
MiniDIN	180° PTH Jam-Nut Socket	G	268
	Solder Jack, Assembly Type	J	269
	180° PTH Socket	K	270
	90° PTH Socket (with Shield)	SS	271
	Solder Plug, Assembly Type	P / POT	272
	Cable Assemblies for Standard MiniDIN Series	CTMD	273
	90° PTH Power Socket (with and without Shield)	SP / SSP	274
	Power Plug	PP	275
	Cable Assemblies for Power Supply	CTMD	276
Earphone Jacks	General Specifications and Mating Plugs for LJE Series	LJE	277
	TH Earphone Jacks (Ø2.5mm)	LJE	277
	TH Earphone Jacks (Ø3.5mm)	LJE	278
	General Specifications and Mating Plugs for AJ Series	AJ	281
	SMT Earphone Jacks (Ø2.5mm)	AJ	281
	SMT Earphone Jacks (Ø3.5mm)	AJ	283
Modular Jacks	Modular Jacks (PCB Mounted, Unshielded)	TS	284
	Modular Jacks (PCB Mounted, Shielded)	TS	288
	Modular Jacks (PCB Edge-Mounted, Shielded)	TS-EDS04	292

CABLES AND ASSEMBLIES

		SERIES	PAGE
	Introduction, Yamaichi and Cable Assembly		297
Flat Cables	0.635mm Pitch (25MIL) Okiflex B&S Type (150V, 105°C)	Flex	298
	0.847mm Pitch (33MIL) Hitachi Cable (150V, 105°C)	TFC30	299
	1.00mm Pitch High Density Flex (300V, 105°C)	DK	300
	1.27mm Pitch High Density Flex (300V, 105°C)	DK	301
	1.27mm Pitch (50MIL) Okiflex S Type (300V, 105°C)	Flex	302
	1.27mm Pitch (50MIL) Okiflex TP Type (150V, 80°C)	TP-Flex	303
	1.27mm Pitch (50MIL) Okiflex SF Type (150V, 60°C)	FS-Flex	304
Flat / Round Cables	0.635mm Pitch (25MIL) Okiflex SFX Type (150V, 80°C)	SFX-S2	305
	1.27mm Pitch (50MIL) Okiflex SFX Type (150V, 80°C)	SFX-S	306
Round Cables (Multi Twisted Pair)	1.27mm Pitch (50MIL AWG 30)	7/0.1	307
	1.27mm Pitch (50MIL AWG 28)	7/0.127	308
	1.27mm Pitch (50MIL AWG 28)	UL20276	309

PRODUCTION SOCKETS

		SERIES	PAGE
Packages			
QFP / TQFP / BQFP	SMT - Socket and TH - Emulation Adapter (Series Introduction)	IC149 / ICP	313
	Series Overview (available Sockets)	IC149 / ICP	314
	QFP-Socket Cross-Reference		315
	Socket Outline Dimensions for IC149 Series		316
	Adapter Dimensions and Extender for Emulation Adapter	ICP / Ext	317
	Sockets and Adapters (44 to 240 Pins)	IC149 / ICP	318
PLCC	SMT - 3 Terminal Styles (20 to 84 Pins)	IC160Z	331
SOP	SMT - Identical Footprint with Narrow Housing (Design 5)	IC179	334
SPGA (Arrays)	TH - Interstitial	YED210	336
PGA (Arrays)	TH - Solder Dip and Wire Wrap Terminals	YED122	337
Appendix			
	Soldering information for various materials		338
	Part Number Index		339
	General Terms of Agrement / Allgemein Geschäftsbedingungen		340
	Yamaichi Contact Addresses		344

CARD CONNECTORS

COMPATIBLE FLASH MEMORY CARDS 17
SERIES FPS, PJS, FMS, FUS, CF

SD AND MMC 18
SERIES FPS

MICROSD 36
SERIES PJS

MICROSIM 42
SERIES FUS

SIM 43
SERIES FMS

COMBINATION CONNECTORS 54
SERIES FRS

COMPACT FLASH 58
SERIES CF

PCMCIA II 66
SERIES CNT, CNS

COMPATIBLE FLASH MEMORY CARDS FOR YAMAICHI CONNECTORS

FEATURES	SECURE DIGITAL (SD)	MULTIMEDIACARD (MMC)	MICROSD
Yamaichi Connector	FPS009	FPS009	PJS008
Series Page Number	18	18	36
Read/Write [MB/s]	2.5 / 2.5	2.5 / 2.5	12.5 / 12.5
Write Protect	no	no	yes
Voltage	2.7 ~ 3.6	2.7 ~ 3.6	2.7 ~ 3.6
Op. Temp. Range	-25 ~ +85°C	-25 ~ +85°C	-25 ~ +85°C
# of Pads	9	7	8
Weight (g)	1.5	1.5	0.4
Volume (mm³)	1,075	1,075	165
Dimensions	24 x 32 x 2.1	24 x 32 x 1.4	11 x 15 x 1.0
Association	www.sdcard.org	www.mmca.org	www.sdcard.org

FEATURES	MICROSIM	SIM	COMPACT FLASH (CF)
Yamaichi Connector	FUS	FMS	CF050
Series Page Number	42	43	58
Read/Write [MB/s]	-	-	20 / 20
Write Protect	-	-	no
Voltage	-	-	3.3 / 5.0
Op. Temp. Range	-25 ~ +85°C	-25~ +85°C	0 ~ +70°C
# of Pads	8	8	50
Weight (g)	-	-	Typ.I: 11.4 / Typ.II: 13.5
Volume (mm³)	(281)	(281)	Typ.I: 5,141 / Typ.II: 7,790
Dimensions	12 x 15 x 0.76	15 x 25 x 0.76	42.8 x 36.4 x 3.3/ (Typ.II 5.0)
Association	www.etsi.org	www.etsi.org	www.compactflash.org

as of Nov 2012

SPECIFICATIONS

Insulation Resistance:	1,000MΩ min. at 500V DC
Withstanding Voltage:	500V ACrms for 1 minute
Contact Resistance:	100mΩ at 1mA / 20mV max.
Voltage Rating:	250Vrms AC
Current Rating:	0.5A
Operating Temp. Range:	-25°C to +85°C
Coplanarity:	≤ 0.1mm
Mating Cycles:	10,000 (office environment)

PART NUMBER

FPS 009 - 2305 - 0

- Series No.
- Number of Contacts
- Design No.
- 0 = Tape & Reel Packaging

MATERIALS AND FINISH

Insulator:	LCP glass filled (GF 40%)
Shielding Plate:	SUS, t = 0.20
Contacts:	PB, t = 0.15 / Contact area = Ni-Au / Solder Tails = Ni-SnCu

FEATURES

- Connector for both card types (MMC and SD card)
- Smooth extraction function by Push-in/ Push-out of card
- Soft lock mechanism for SD card
- Tape & Reel packaging (500 pcs per reel)
- Card detector and Write protection switch
- Mechanism to avoid flying out of the card
- Small size (Ht. 3.1 x W. 28.0 x L. 29.8)
- 2-point contact, protection against electrical interruption

OUTLINE DIMENSIONS

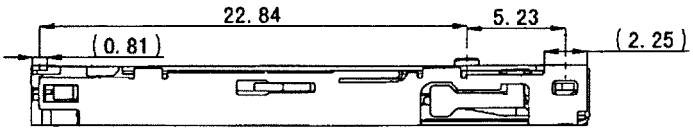

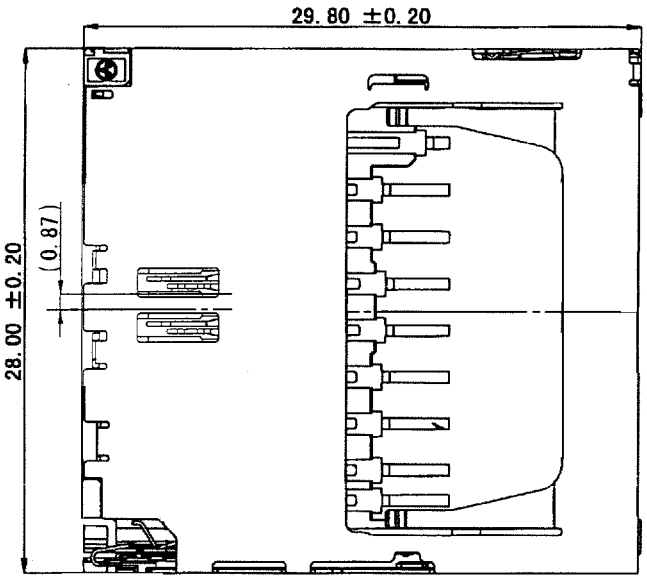

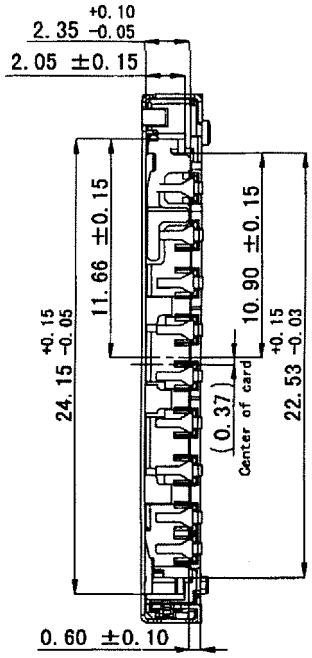

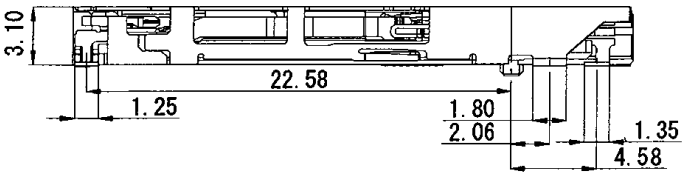

CIRCUIT DIAGRAM FOR SWITCH

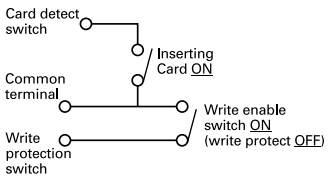

RECOMMENDED PCB LAYOUT FOR FPS009-2305-0

Top View

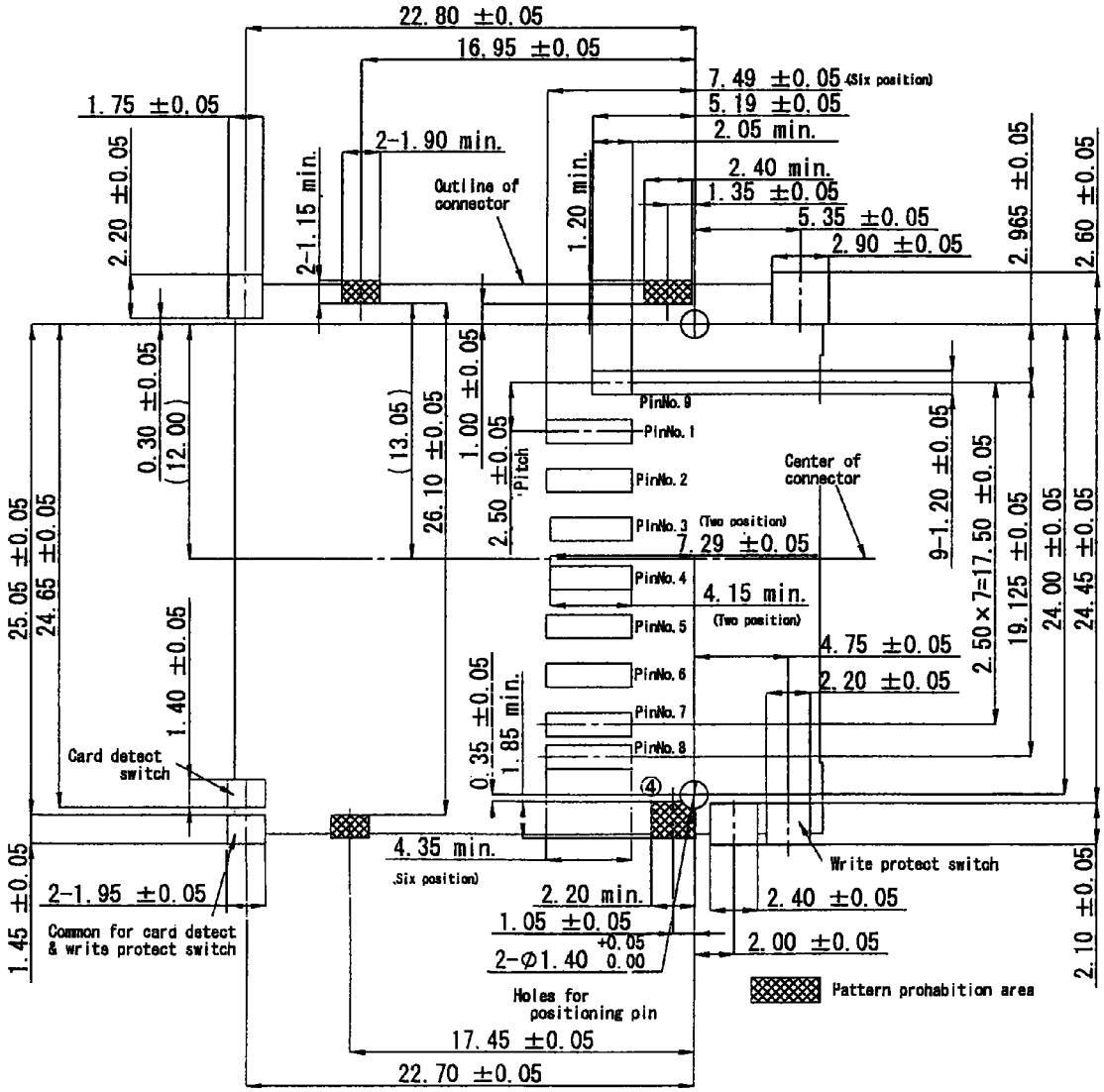

CARD INSERTION DETAILS

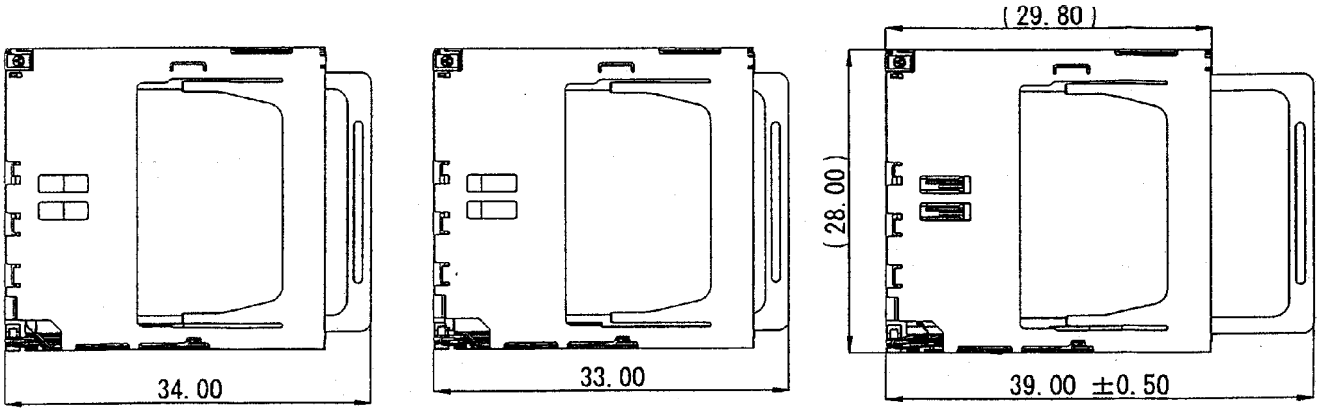

Card locked position | Card pushed position | Card eject position

SPECIFICATIONS

Insulation Resistance:	1,000MΩ min. at 500V DC
Withstanding Voltage:	500V ACrms for 1 minute
Contact Resistance:	100mΩ at 1mA / 20mV max.
Voltage Rating:	250Vrms AC
Current Rating:	0.5A
Operating Temp. Range:	-25°C to +85°C
Coplanarity:	≤ 0.1mm
Mating Cycles:	10,000 (office environment)

PART NUMBER

FPS 009 - 2409 - 0

- Series No.
- Number of Contacts
- Design No.
- 0 = Tape & Reel Packaging

Materials and Finish

Insulator:	LCP glass filled (GF 40%) UL94V-0
Shielding Plate:	SUS, t = 0.20
Contacts:	PB, BeCu t = 0.18 / Contact area = Ni-Au / Solder Tails = Ni-SnCu

Features

- Connector for both card types (MMC and SD card)
- Smooth extraction function by Push-in/ Push-out of card
- Soft lock mechanism for SD card
- Low profile (Ht. 2.8 x W. 28.0 x L. 30.5)
- Card detector
- Write protection switch
- Mechanism to avoid flying out of the card
- Tape & Reel packaging (600 pcs / reel)
- Two-point contact, protection against electrical interruption

OUTLINE DIMENSIONS

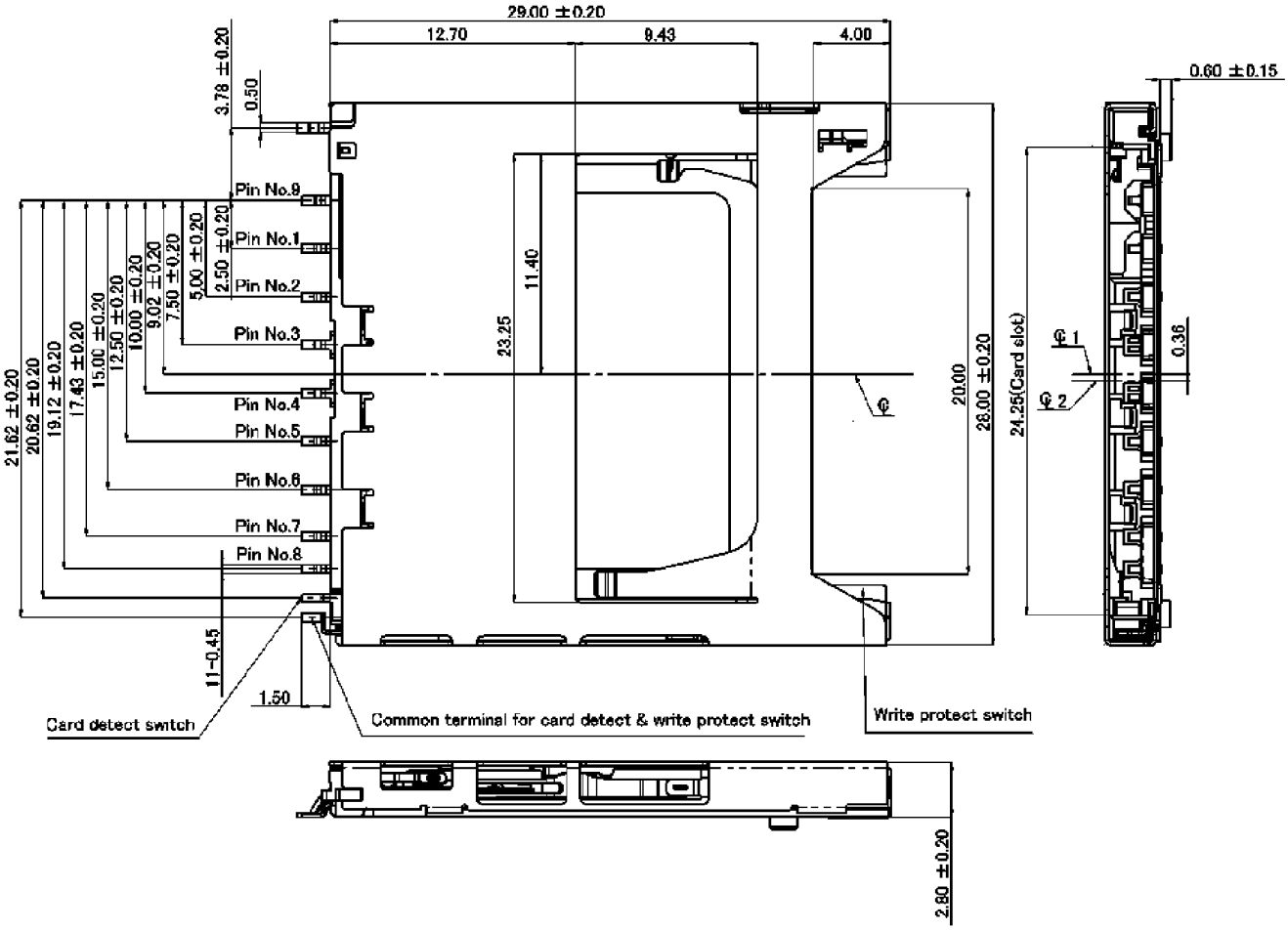

RECOMMENDED PCB LAYOUT FOR FPS009-2409-0

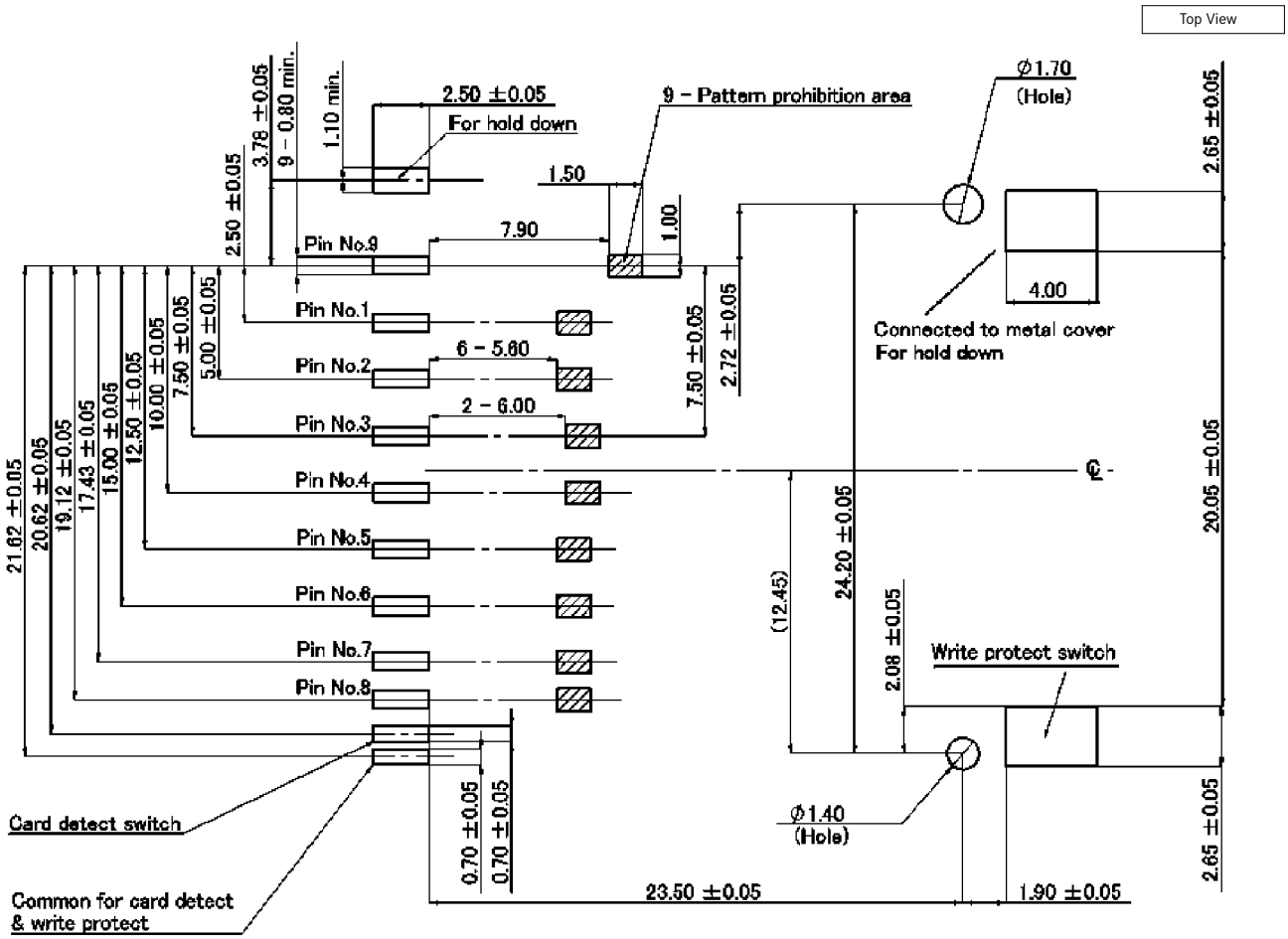

CIRCUIT DIAGRAM FOR SWITCH

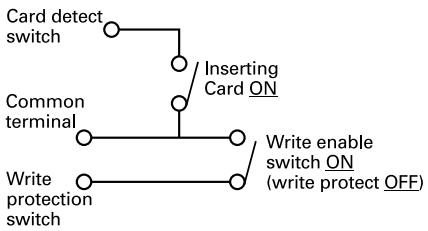

CARD INSERTION DETAILS

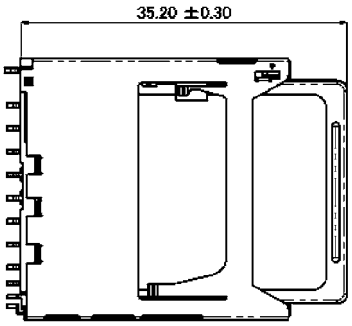

Card locked position

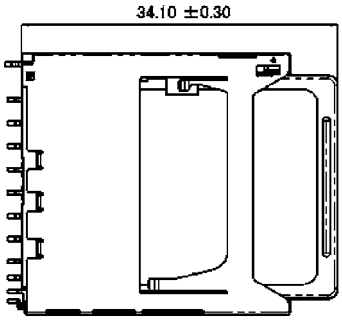

Card pushed position

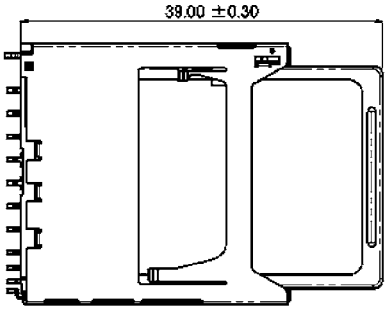

Card eject position

SPECIFICATIONS

Insulation Resistance:	1,000MΩ min. at 500V DC
Withstanding Voltage:	500V ACrms for 1 minute
Contact Resistance:	100mΩ at 1mA / 40mV max.
Voltage Rating:	5V DC
Current Rating:	0.5A
Operating Temp. Range:	-25°C to +85°C
Coplanarity:	≤ 0.1mm
Mating Cycles:	10,000 (office environment)

PART NUMBER

FPS 009 - 2901 - 0

- Series No.
- Number of Contacts
- Design No.
- 0 = Tape & Reel Packaging

MATERIALS AND FINISH

Insulator:	LCP glass filled (GF 40%)
Shielding Plate:	SUS
Contacts:	PB, t = 0.15 / Contact area = Ni-Au /

FEATURES

- Connector for both card types (MMC and SD card)
- Smooth extraction function by Push-in/ Push-out of card
- Soft lock mechanism for SD card
- Super low profile (Ht. 2.80 x W. 28.10 x L. 27.10)
- Card detector
- Write protection switch
- Mechanism to avoid flying out of the card
- Closed cover
- Tape & Reel packaging (500 pcs / reel)

OUTLINE DIMENSIONS

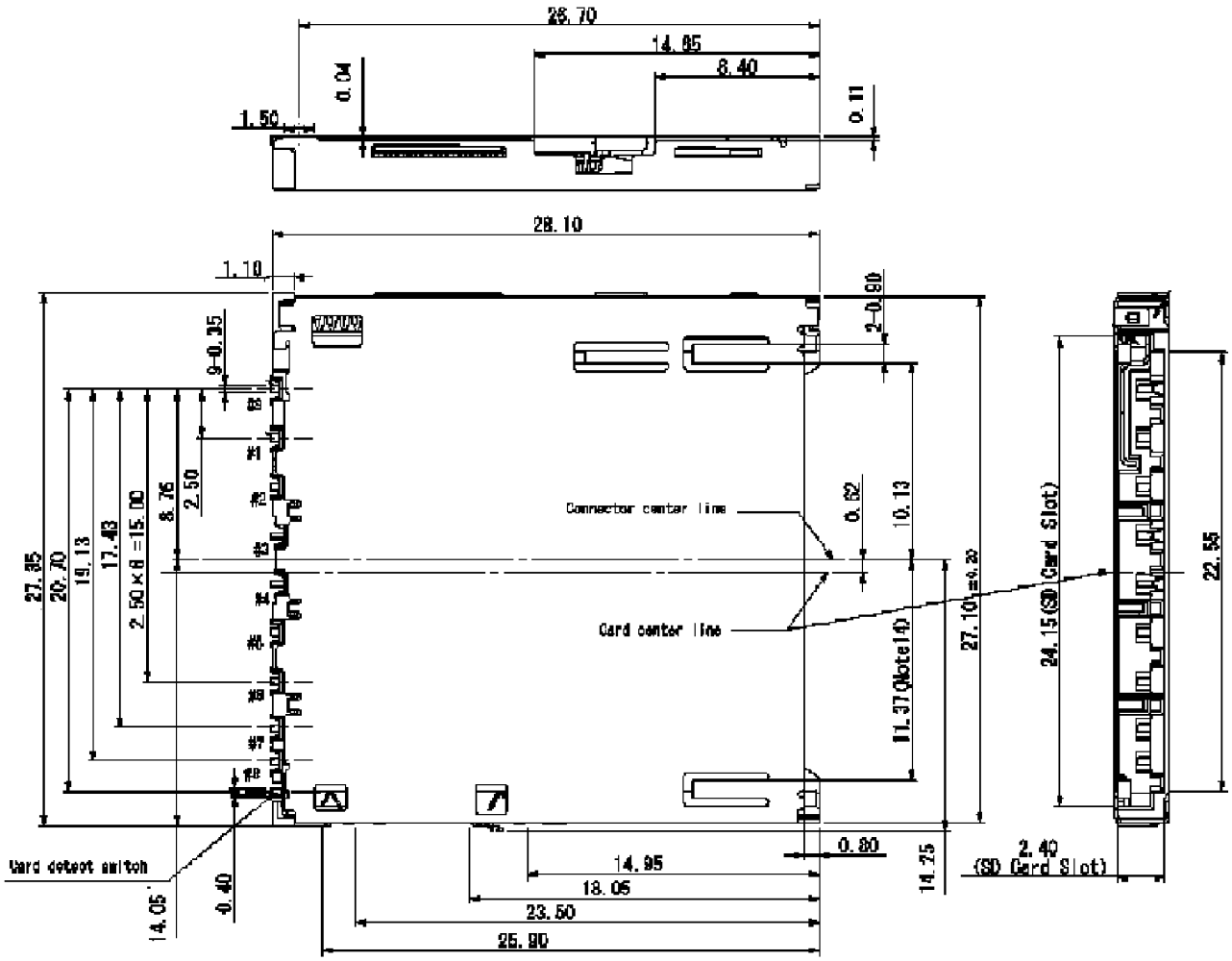

RECOMMENDED PCB LAYOUT FOR FPS009-2901-0

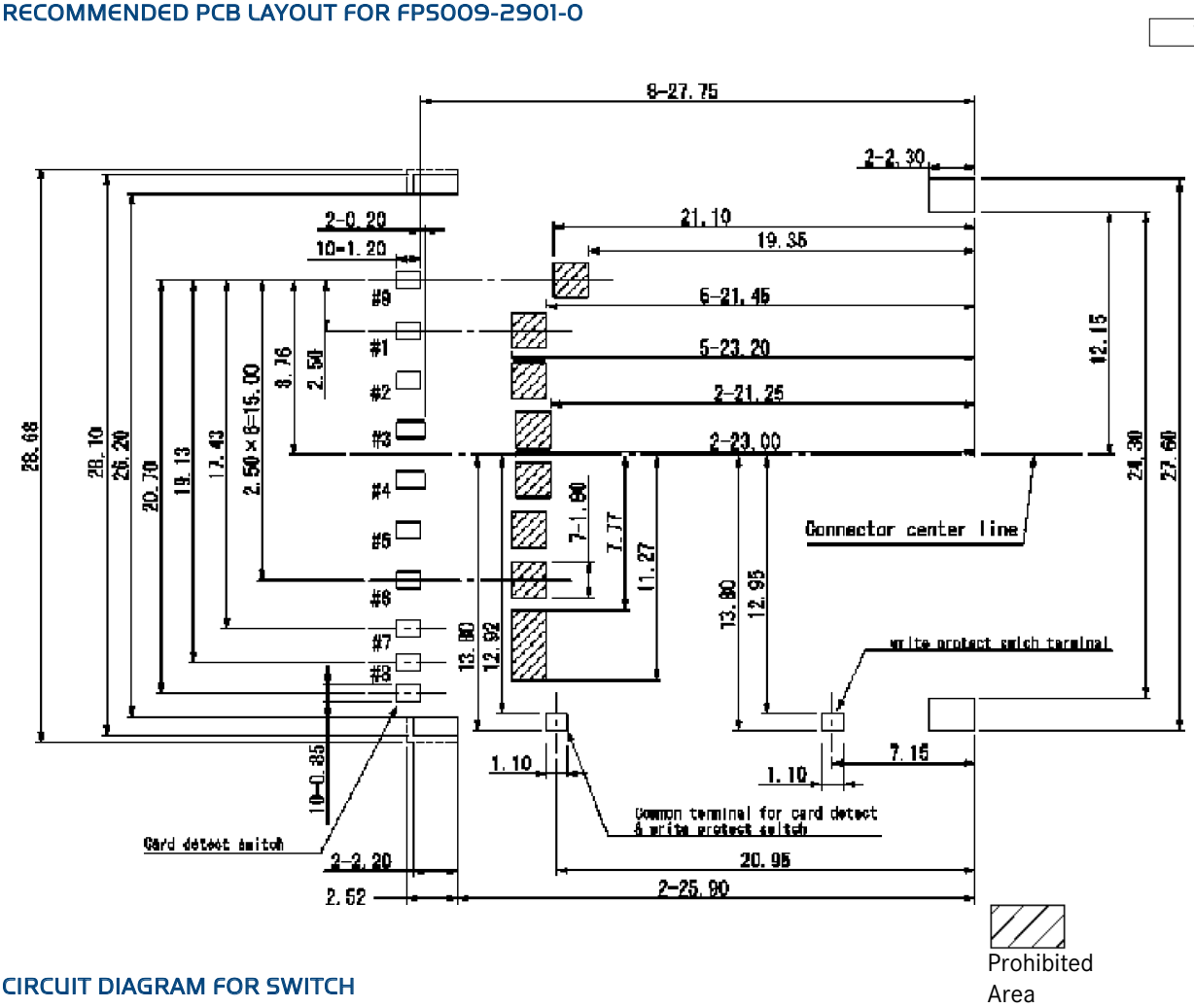

CIRCUIT DIAGRAM FOR SWITCH

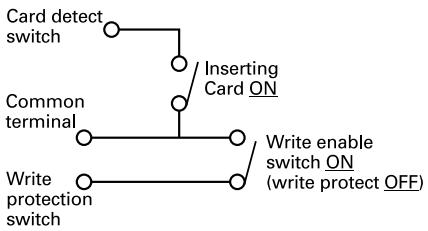

CARD INSERTION DETAILS

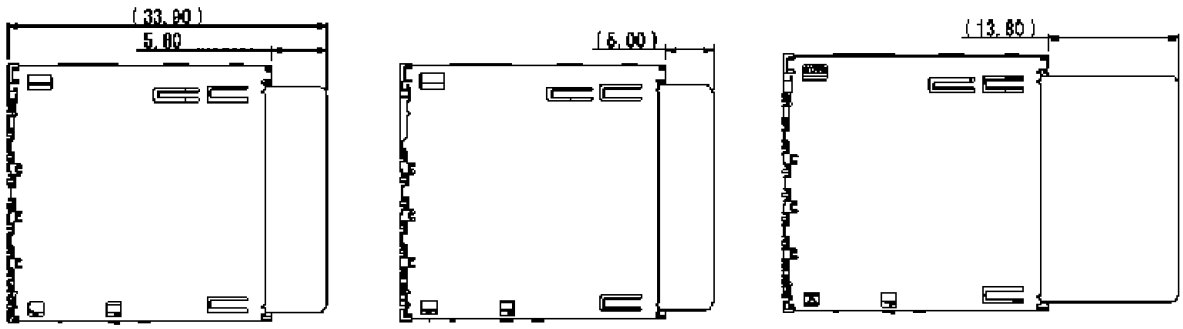

Card locked position

Card pushed position

Card eject position

SPECIFICATIONS

Insulation Resistance:	1,000MΩ min. at 500V DC
Withstanding Voltage:	500V ACrms for 1 minute
Contact Resistance:	100mΩ at 1mA / 20mV max.
Voltage Rating:	5V DC
Current Rating:	0.5A
Operating Temp. Range:	-25°C to +85°C
Mating Cycles:	5,000 (harsh environment)
	10,000 (office environment)

PART NUMBER

FPS 009 - 2903 - 0

- Series No.
- Number of Contacts
- Design No.
- 0 = Tape & Reel Packaging

MATERIALS AND FINISH

Insulator:	LCP (GF) UL 94V-0
Shielding Plate:	SUS
Contacts:	PB, Ni-Au / Sn

FEATURES

- SD reader for harsh environment with automotive applications
- Connector for both card types (MMC and SD card)
- Smooth extraction function by Push-in/ Push-out of card
- Double spring coil
- EMI prevention with four grounding terminals
- Card detector
- Write protection switch
- Tape & Reel packaging (500 pcs / reel)

OUTLINE DIMENSIONS

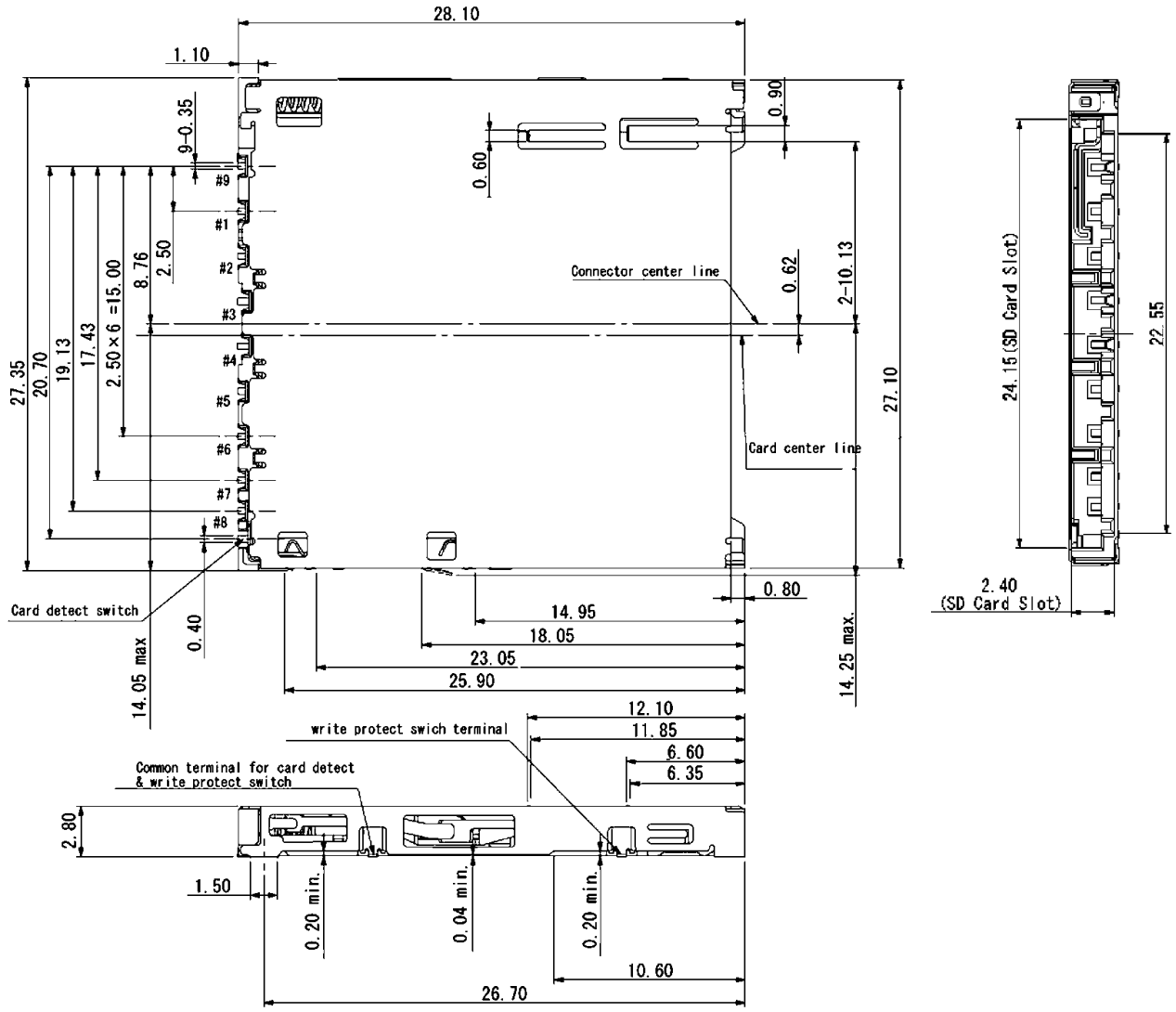

RECOMMENDED PCB LAYOUT FOR FPS009-2903-0

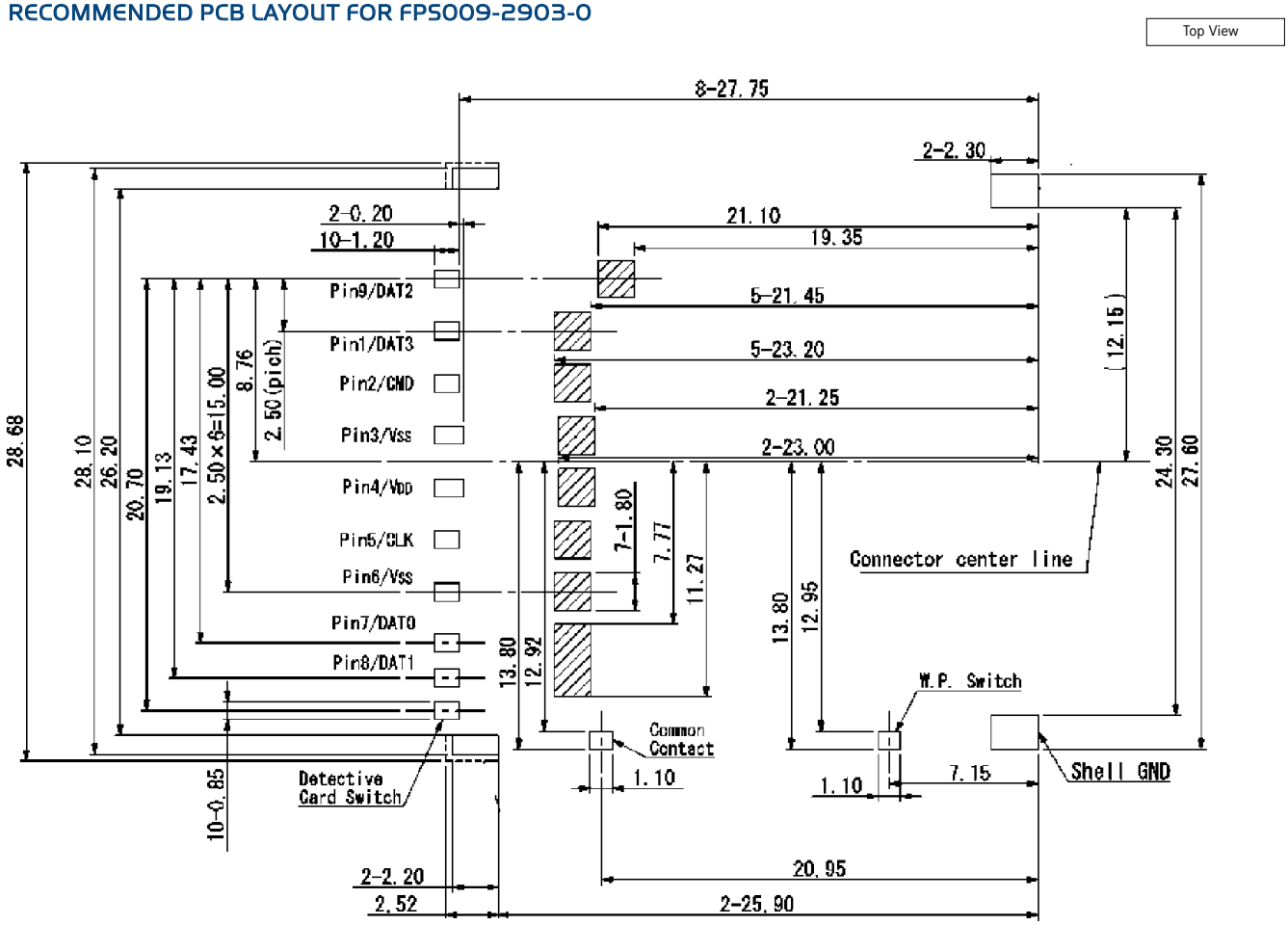

CIRCUIT DIAGRAM FOR SWITCH

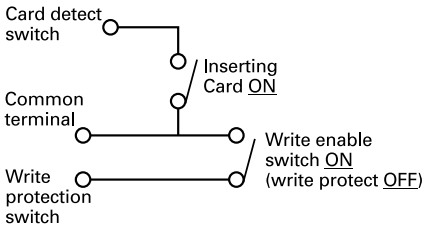

CARD INSERTION DETAILS

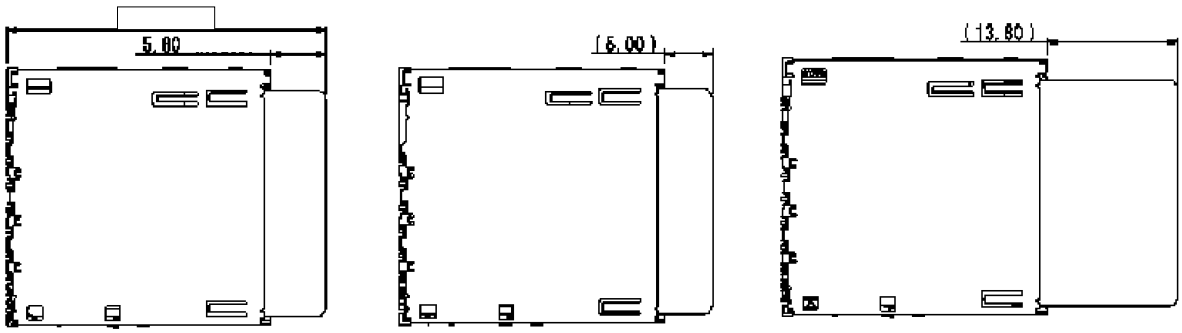

Card locked position

Card pushed position

Card eject position

SPECIFICATIONS

Insulation Resistance:	500MΩ min. at 500V DC
Withstanding Voltage:	500V ACrms for 1 minute
Contact Resistance:	100mΩ at 1mA / 20mV max.
Voltage Rating:	5Vrms AC
Current Rating:	0.5A
Operating Temp. Range:	-25°C to +85°C
Coplanarity:	≤ 0.1mm
Mating Cycles:	10,000 times (office environment)

PART NUMBER

FPS 009 - 2960 - 0

- Series No.
- Number of Contacts
- Design No.
- 0 = Tape & Reel Packaging

MATERIALS AND FINISH

Insulator:	LCP
Shielding Plate:	SUS
Contacts:	PB, Ni-Au and Sn

FEATURES

- Connector for both card types (MMC and SD card)
- For assembly underneath the PC-board (reversed)
- Smooth extraction function by Push-in/ Push-out of card
- Low profile (Ht. 2.85 x W. 28.00 x L. 29.00)
- EMI prevention
- SDIO capable
- Card detector
- Write protection switch
- Card mis-insertion prevention design
- Soft lock mechanism for SD card
- Card fly-out stop design
- Tape & Reel packaging (500 pcs / reel)

OUTLINE DIMENSIONS

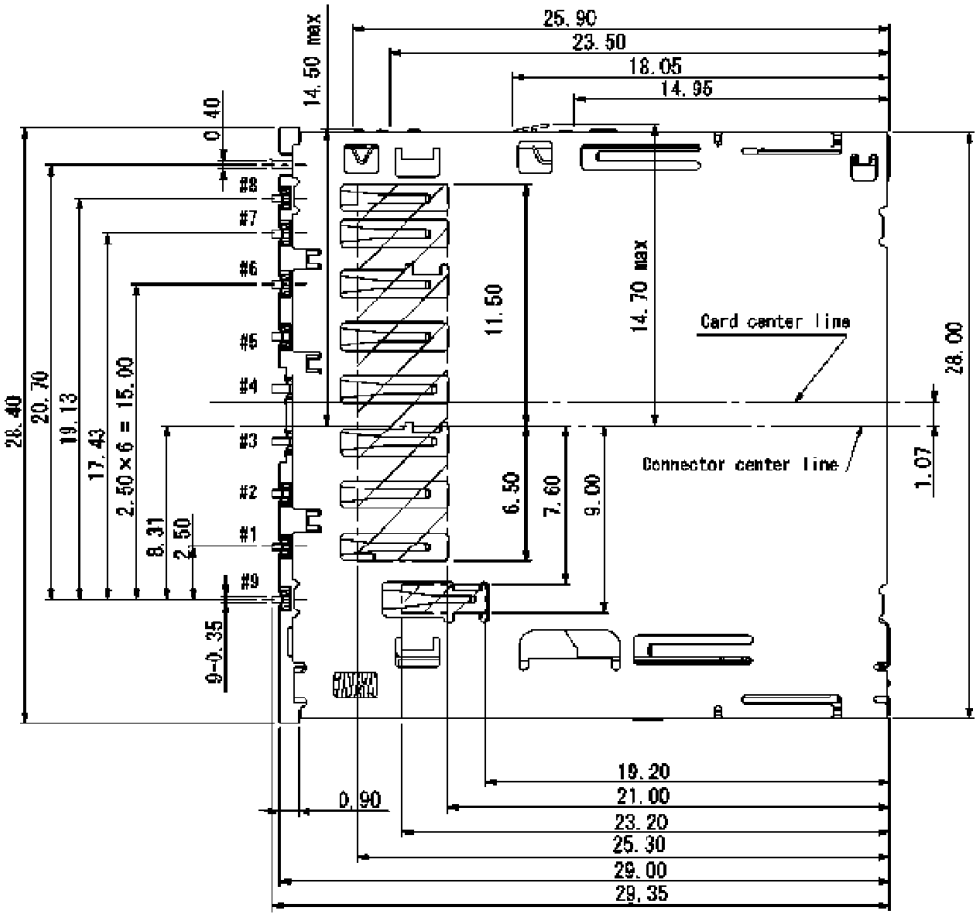

RECOMMENDED PCB LAYOUT FPS009-2960-0

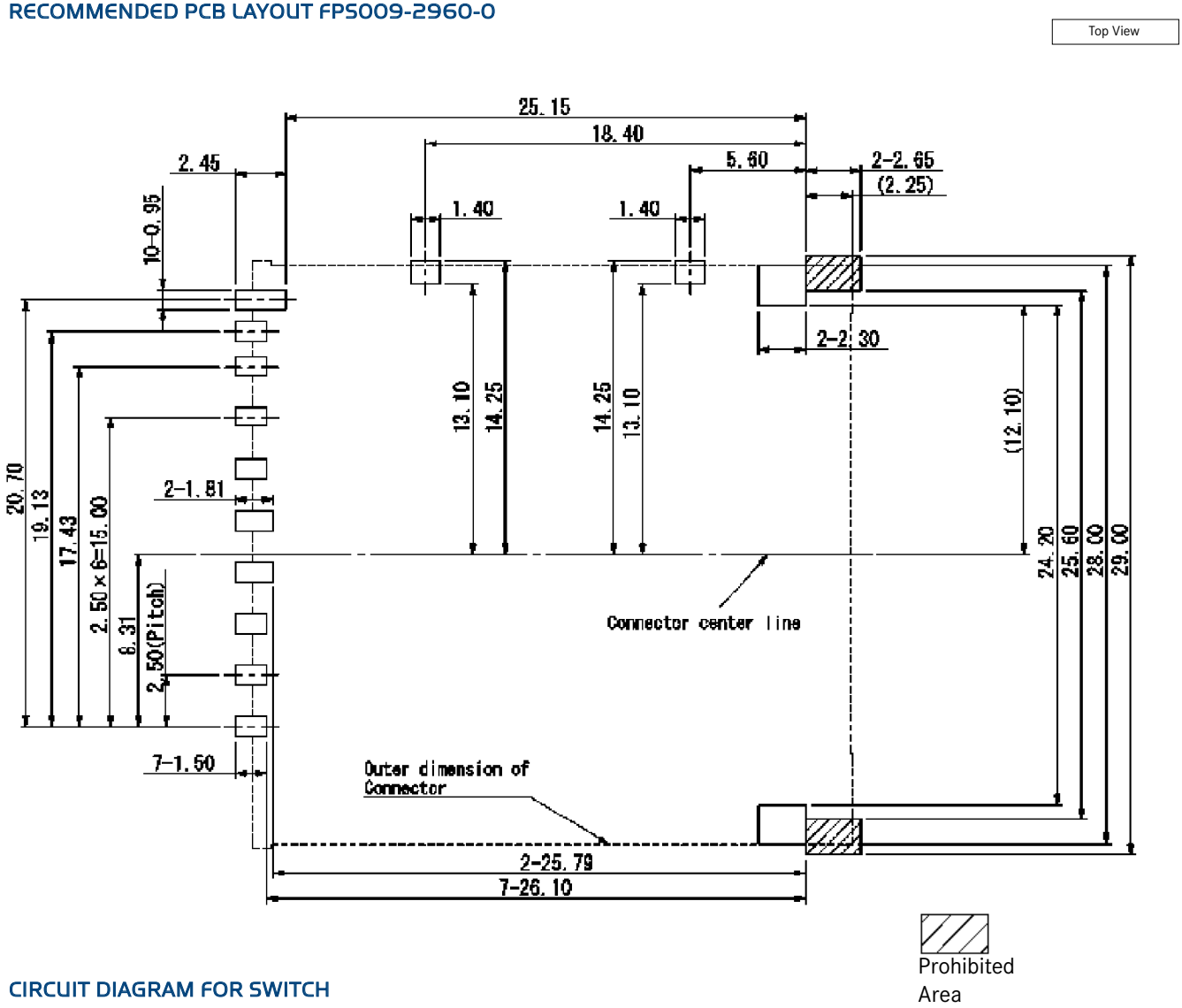

CIRCUIT DIAGRAM FOR SWITCH

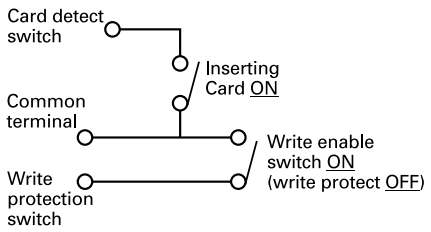

CARD INSERTION DETAILS

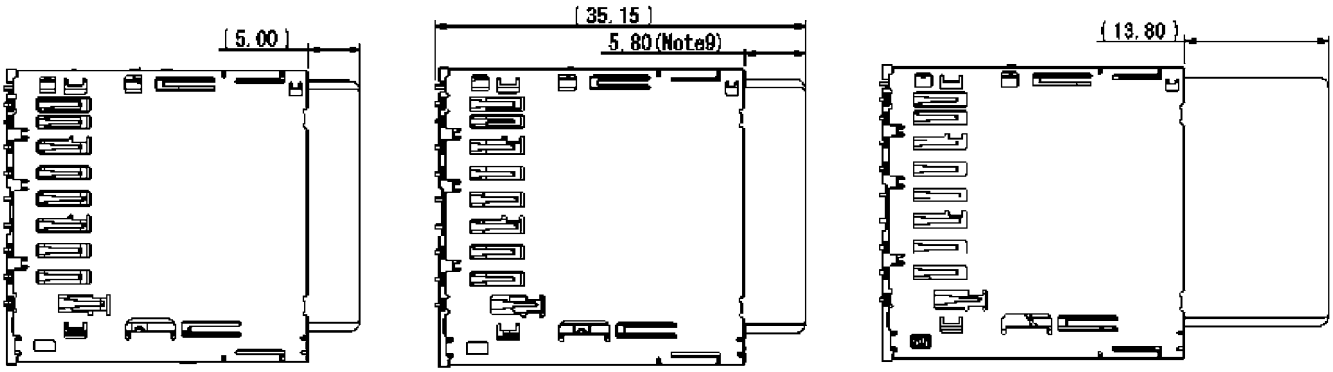

Card pushed position | Card locked position | Card eject position

SPECIFICATIONS

Insulation Resistance:	1,000MΩ min. at 500V DC
Withstanding Voltage:	500V ACrms for 1 minute
Contact Resistance:	100mΩ at 1mA / 40mV max.
Voltage Rating:	5V DC
Current Rating:	0.5A
Operating Temp. Range:	-25°C to +85°C
Mating Cycles:	10,000 (office environment)

PART NUMBER

FPS 009 - 2920 - 0

- Series No.
- Number of Contacts
- Design No.
- 0 = Tape & Reel Packaging

MATERIALS AND FINISH

Insulator:	LCP UL 94V-0
Shielding Plate:	SUS
Contacts:	PB, t = 0.15 / Contact area = Ni-Au

FEATURES

- Card stay detection switch at the slot area
- EMI prevention with four grounding terminals
- Smooth extraction function by Push-in/ Push-out of card
- Write protection switch
- SDIO capable
- Tape & Reel packaging (500 pcs / reel)

OUTLINE DIMENSIONS

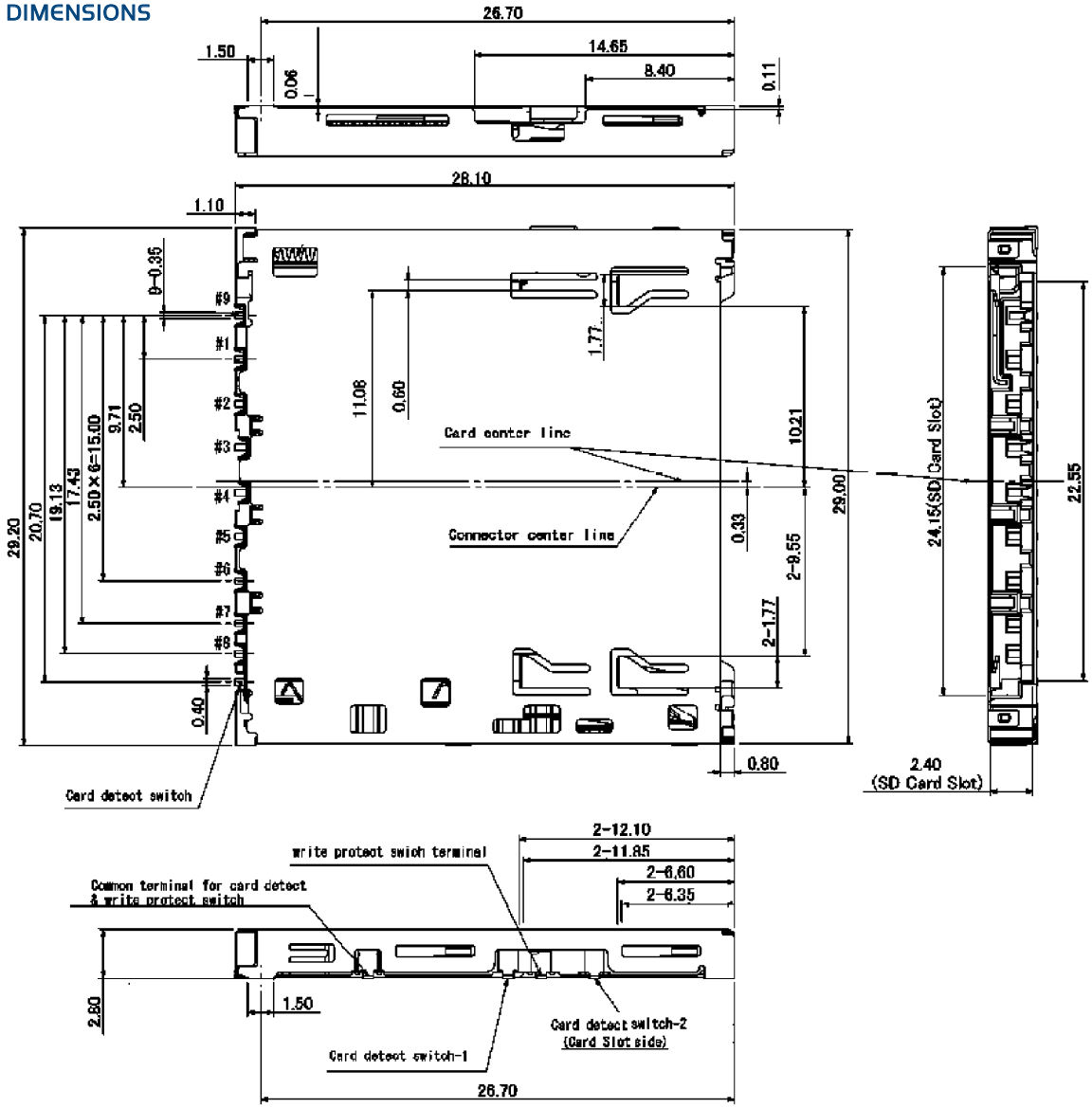

RECOMMENDED PCB LAYOUT FOR FPS009-2920-0

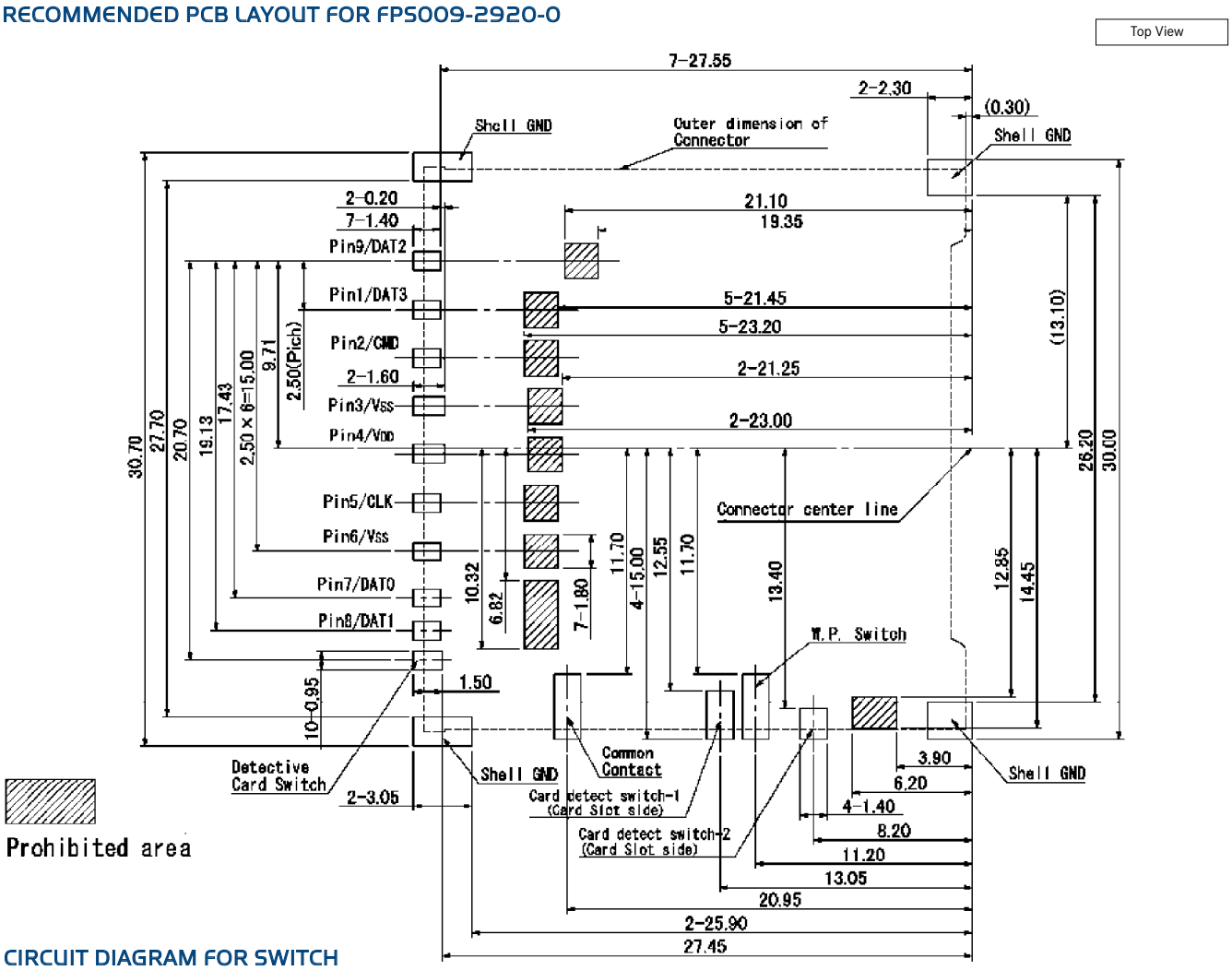

CIRCUIT DIAGRAM FOR SWITCH

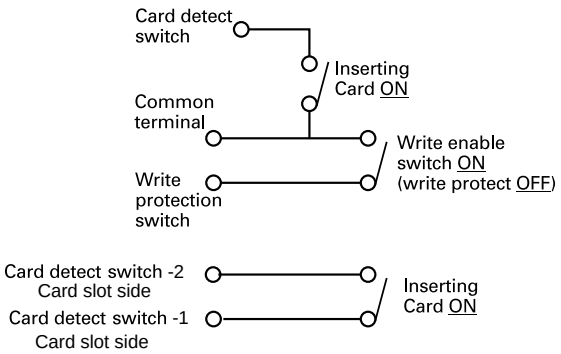

CARD INSERTION DETAILS

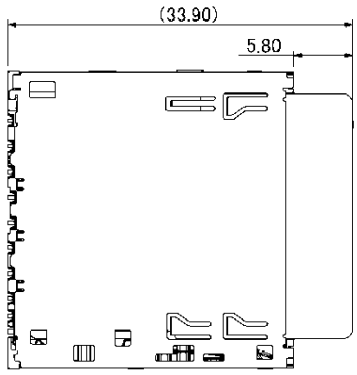

Card locked position

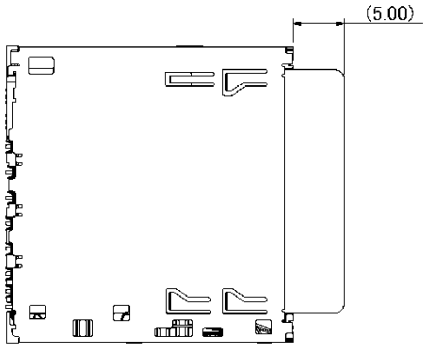

Card pushed position

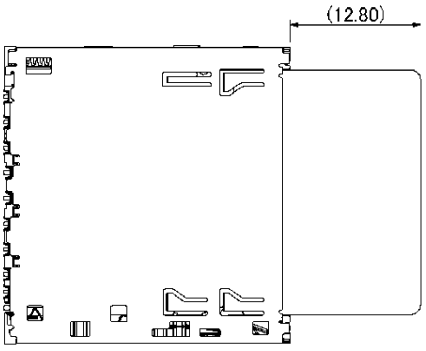

Card eject position

SPECIFICATIONS

Insulation Resistance:	1,000MΩ min. at 500V DC
Withstanding Voltage:	500V ACrms for 1 minute
Contact Resistance:	100mΩ at 1mA / 40mV max.
Voltage Rating:	5V DC
Current Rating:	0.5A
Operating Temp. Range:	-25°C to +85°C
Mating Cycles:	10,000 (office environment)

PART NUMBER

FPS 009 - 2970 - 0

- Series No.
- Number of Contacts
- Design No.
- 0 = Tape & Reel Packaging

MATERIALS AND FINISH

Insulator:	LCP UL 94V-0
Shielding Plate:	SUS
Contacts:	PB, t = 0.15 / Contact area = Ni-Au

FEATURES

- Card stay detection switch at the slot area
- EMI prevention with four grounding terminals
- Smooth extraction function by Push-in/ Push-out of card
- Write protection switch
- SDIO capable
- Tape & Reel packaging (400 pcs / reel)

OUTLINE DIMENSIONS

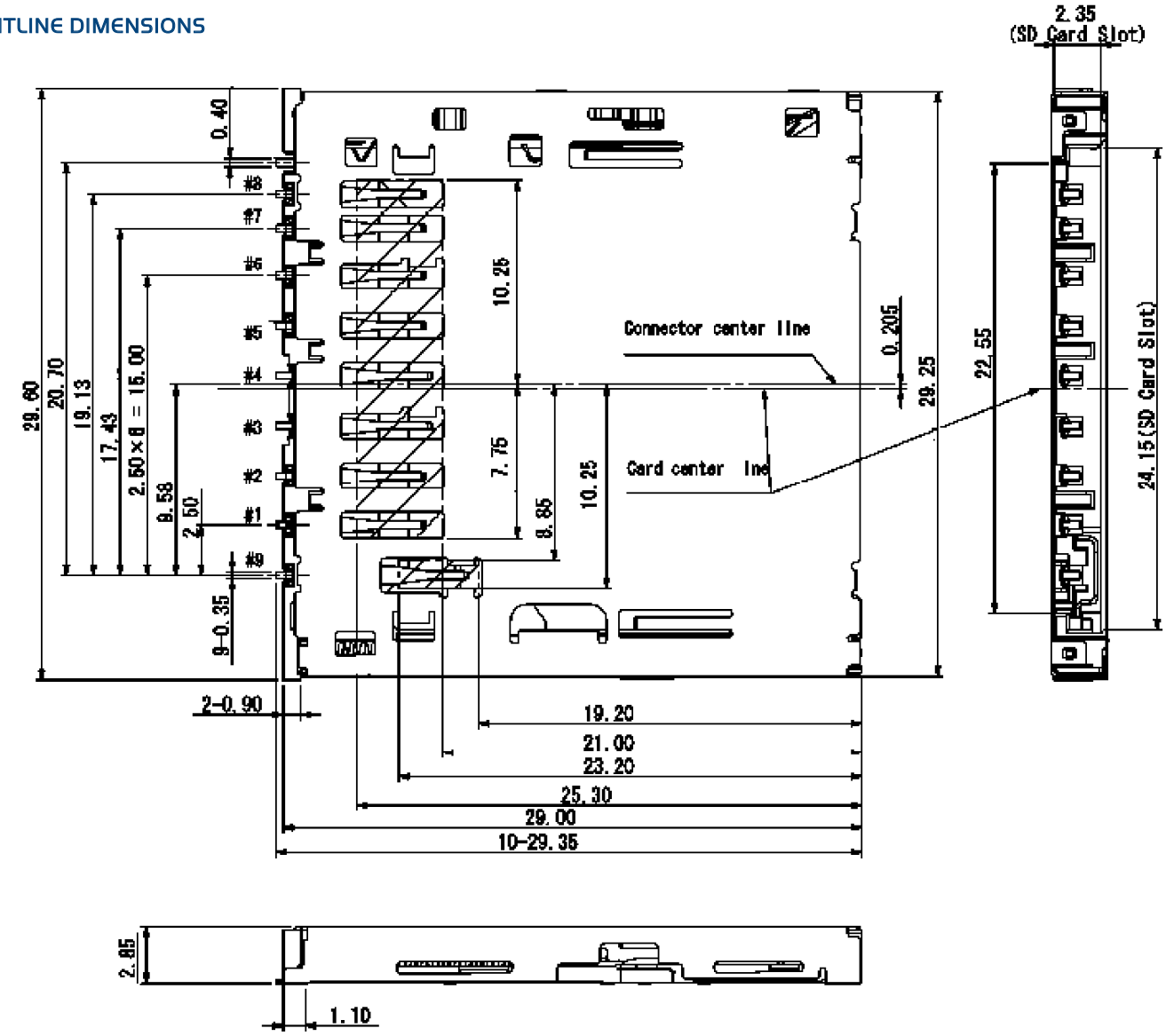

RECOMMENDED PCB LAYOUT FOR FPS009-2970-0

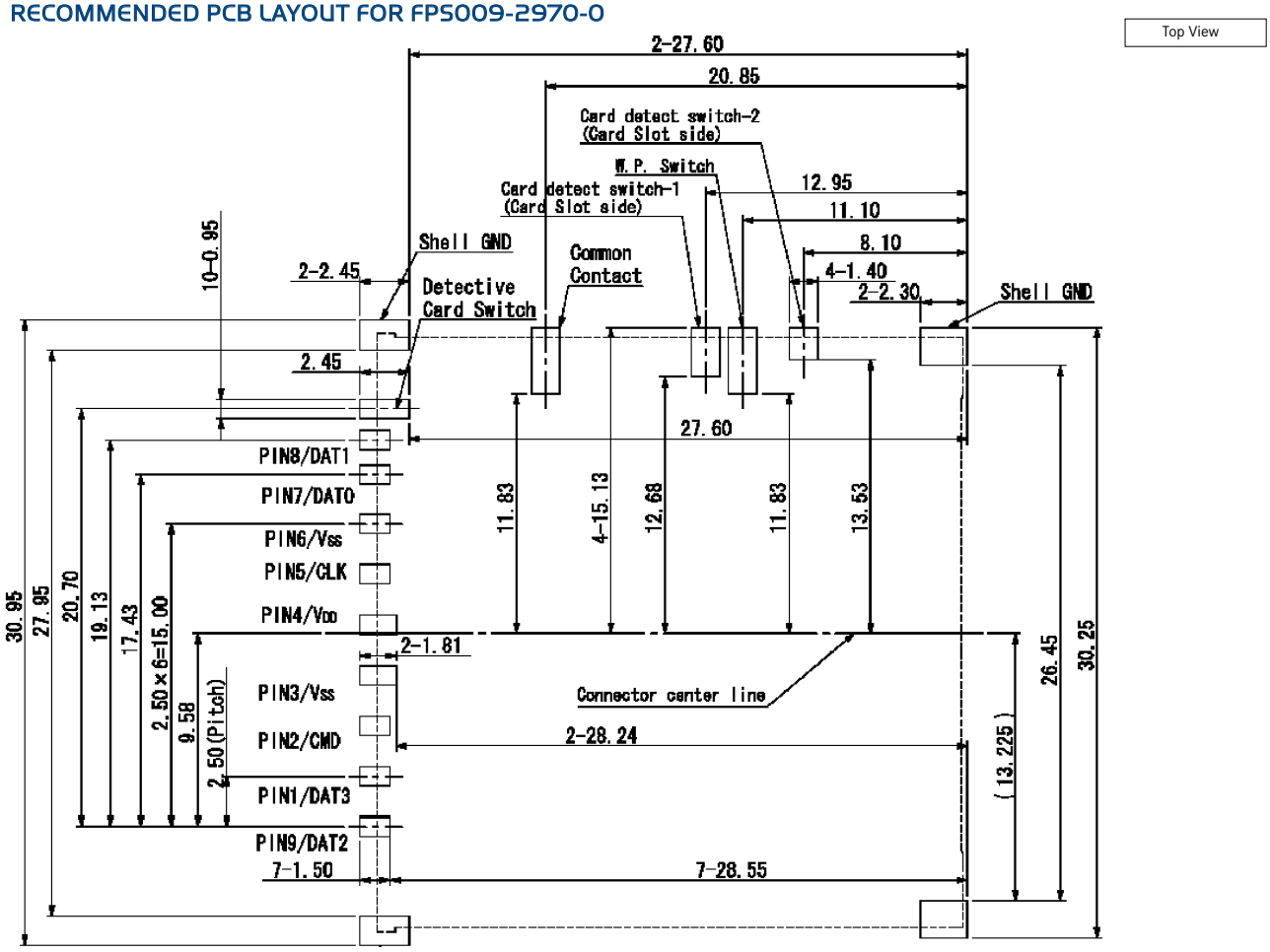

CIRCUIT DIAGRAM FOR SWITCH

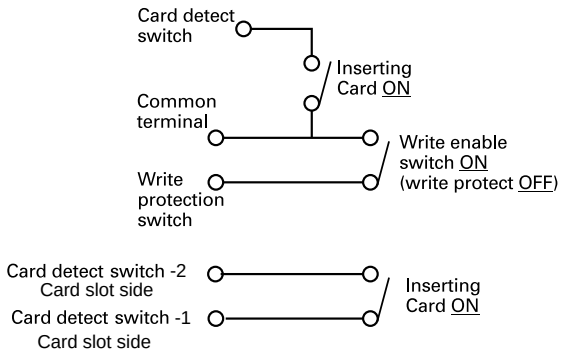

CARD INSERTION DETAILS

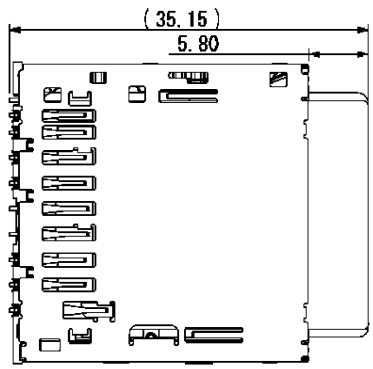

Card locked position

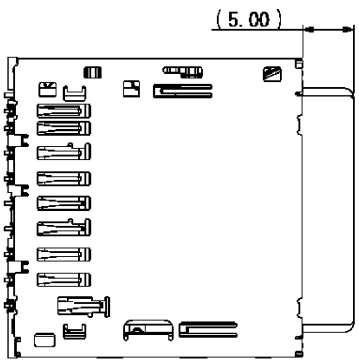

Card pushed position

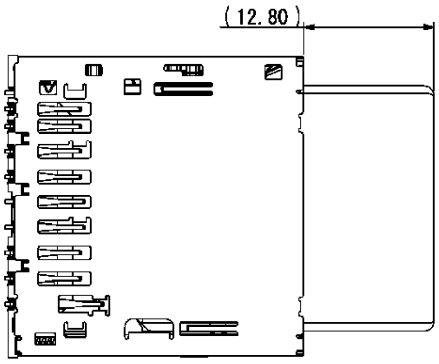

Card eject position

SPECIFICATIONS

Insulation Resistance:	1,000MΩ min. at 500V DC
Withstanding Voltage:	500V ACrms for 1 minute
Contact Resistance:	100mΩ at 1mA / 20mV max.
Voltage Rating:	250Vrms AC
Current Rating:	0.5A
Operating Temp. Range:	-25°C to +85°C
Coplanarity:	≤ 0.1mm
Mating Cycles:	10,000 (office environment)

MATERIALS AND FINISH

Insulator:	LCP glass filled
Contacts:	PB, t = 0.23
	Contact area = Ni-Au
	Solder Tails = NI-SnCu
Write Protection:	PB, t = 0.18 Ni-Au
Card Detector:	PB, t = 0.15, Ni-Au
Ejector:	LCP glass filled

FEATURES

- Easy operation by manual insertion / extraction
- 3 step sequential contacting design
- Card detector and write protection (optional)
- Tape and Reel packaging (500 pcs / reel)

PART NUMBER

FPS 009 - 300 * - BL

- Series No.
- Number of Contacts
- Design No.
- 1 = with Simple Ejector
  2 = without Simple Ejector
  3 = without Simple Ejector and Switches

OUTLINE DIMENSIONS

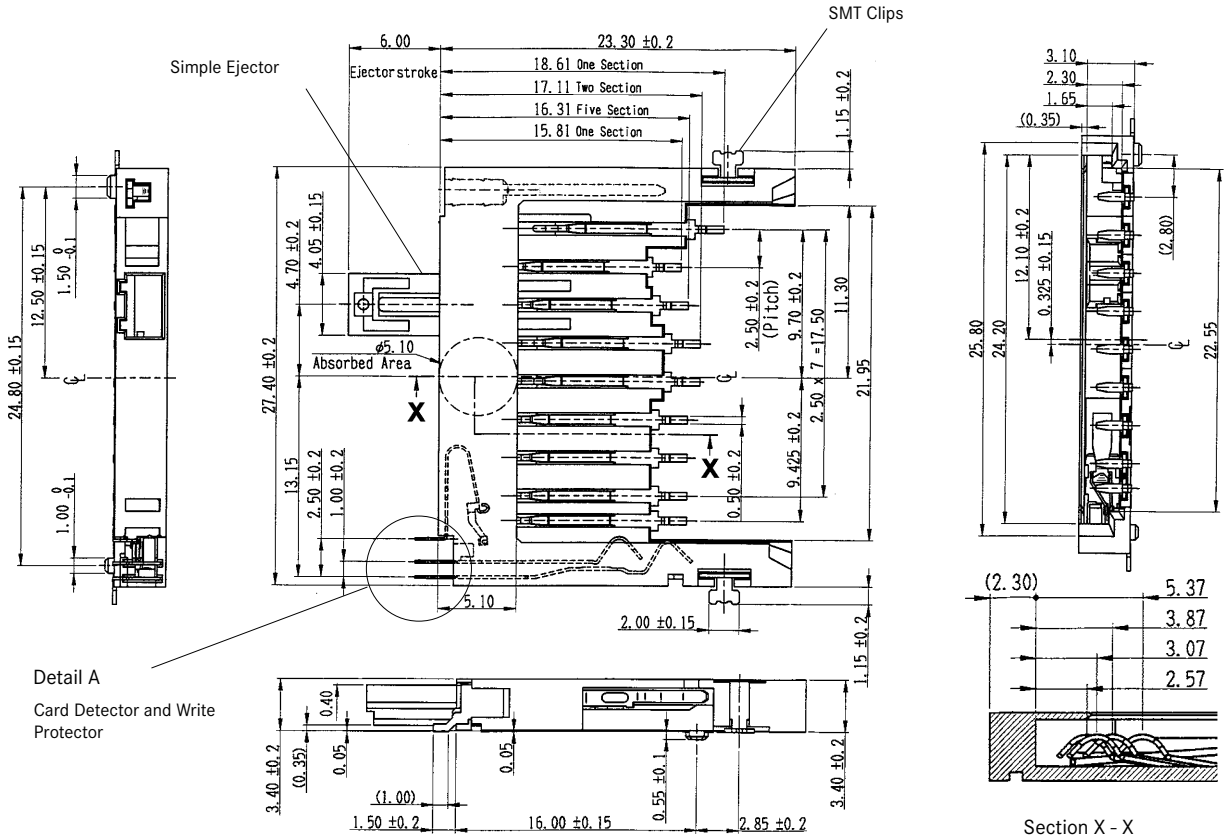

FUNCTION TABLE

Part Number	Simple Ejector	Card Detector	SMT Clips	Write Protection Switch
FPS009-3001-BL	Yes	Yes	Yes	Yes
FPS009-3002-BL	-	Yes	Yes	Yes
FPS009-3003-BL	-	-	Yes	-

RECOMMENDED PCB LAYOUTS FPS009-3001-BL AND FPS009-3002-BL

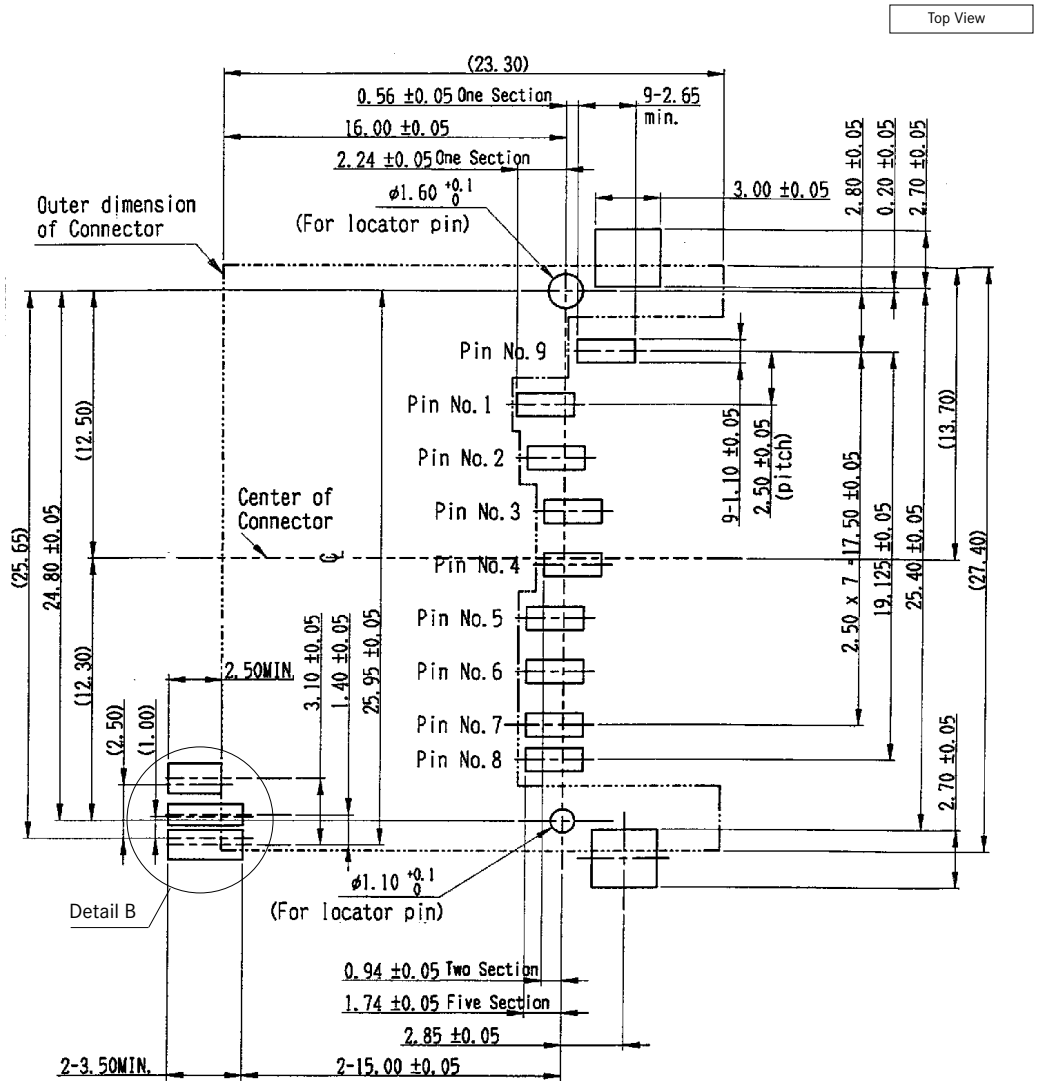

DETAIL A (CARD DETECTOR / WRITE PROTECTOR)

FPS009-3001-BL and FPS009-3002-BL

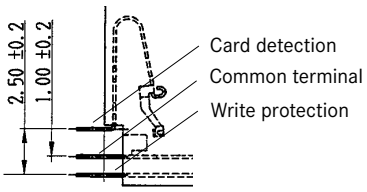

CIRCUIT DIAGRAM FOR SWITCH

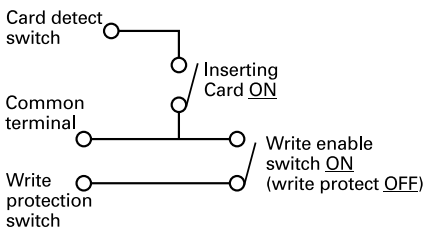

DETAIL B (PCB LAYOUTS)

FPS009-3001-BL and FPS009-3002-BL

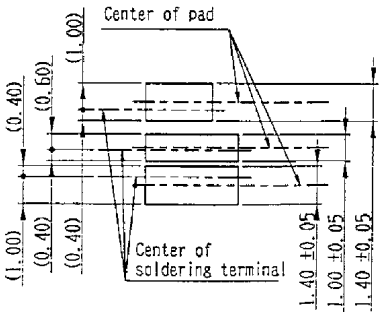

SPECIFICATIONS

Insulation Resistance:	1,000MΩ min. at 500V DC
Withstanding Voltage:	500V ACrms for 1 minute
Contact Resistance:	100mΩ at 1mA / 20mV max.
Voltage Rating:	250Vrms AC
Current Rating:	0.5A
Operating Temp. Range:	-25°C to +85°C
Coplanarity:	≤ 0.1mm
Mating Cycles:	10,000 (office environment)

PART NUMBER

FPS 009 - 3202-BL

- Series No.
- Number of Contacts
- Design No.

MATERIALS AND FINISH

Insulator:	LCP glass filled
Contacts:	PB, t = 0.23
	Contact area = Ni-Au
	Solder Tails = Ni-SnCu
Write Protection:	PB, t = 0.18 Ni-Au
Card Detector:	PB, t = 0.15, Ni-Au

FEATURES

- Connector for both card types (SD and MMC card)
- Easy operation by manual insertion / extraction
- Short housing (20.3mm instead of 23.3mm)
- 3 step sequential contacting design
- With card retention mechanism
- With card detector and write protection
- Tape and Reel packaging

OUTLINE DIMENSIONS FOR FPS009-3202-BL

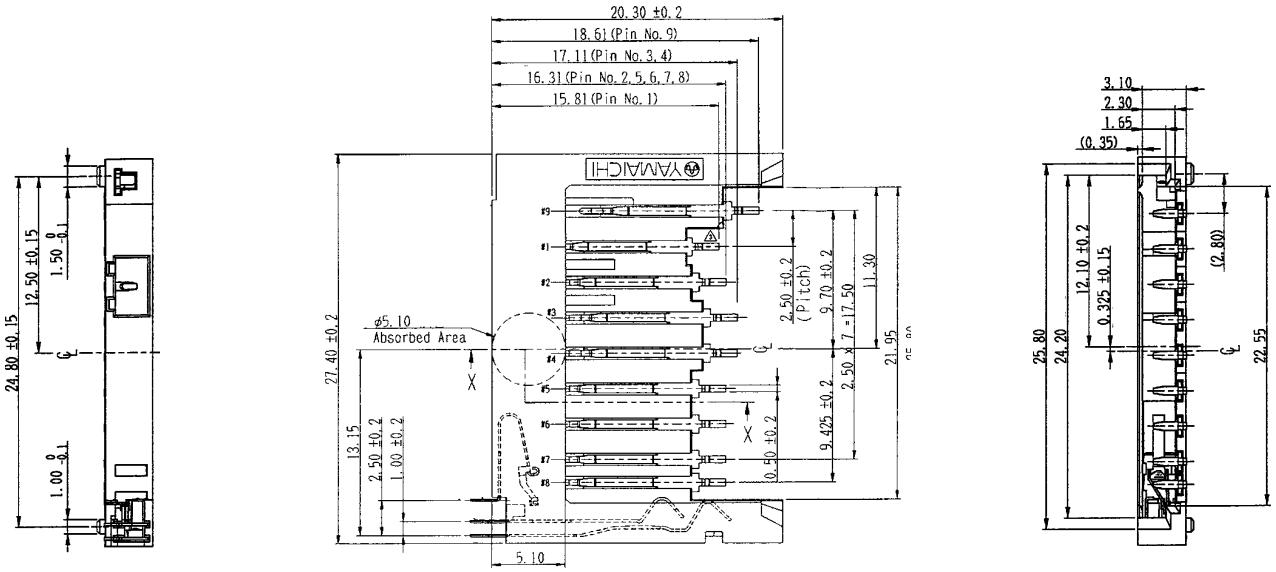

RECOMMENDED PCB LAYOUT FPS009-3202-BL

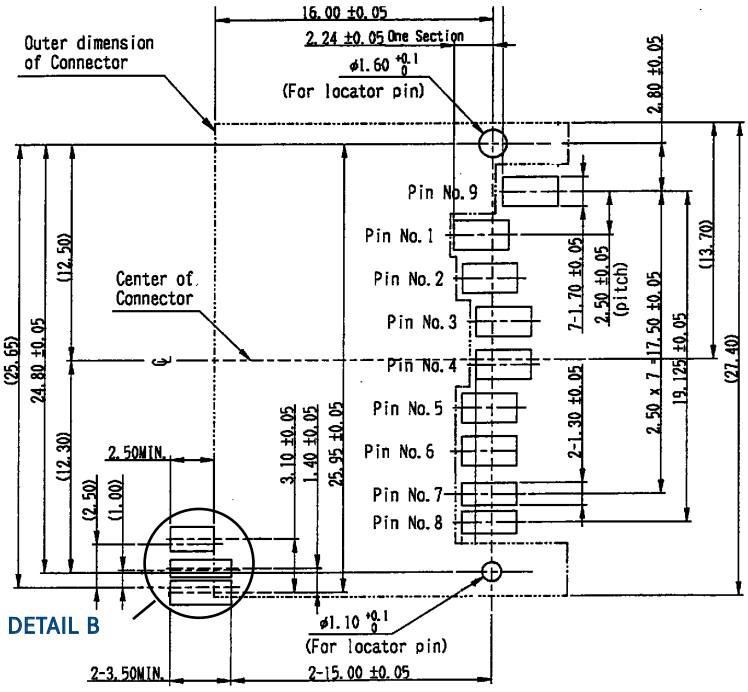

DETAIL B

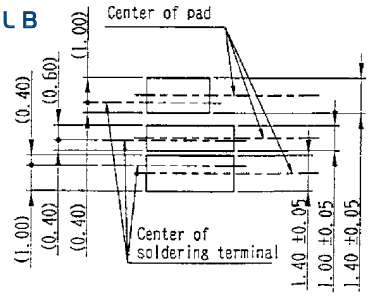

CIRCUIT DIAGRAM FOR SWITCH

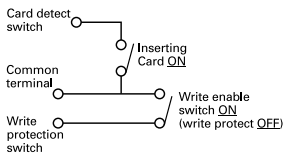

DETAIL A (CARD DETECTOR / WRITE PROTECTOR)

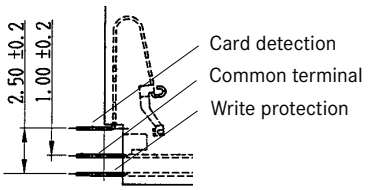

SPECIFICATIONS

Insulation Resistance:	1,000MΩ min. at 500V DC
Withstanding Voltage:	500V ACrms for 1 minute
Contact Resistance:	100mΩ at 1mA / 20mV max.
Voltage Rating:	5V DC
Current Rating:	0.5A max.
Operating Temp. Range:	-30°C to +85°C
Mating Cycles:	100

PART NUMBER

FPS 009 - 4200-0 (03)

- Series No.
- Number of Contacts
- Design No.

MATERIALS AND FINISH

Insulator: LCP Black (UL94V-0)

Contacts: Copper Alloy with selective Gold

FEATURES

- Automatic locking funktion after insertion of SD card
- 2-point contact installation on all contact-terminals to ensure die-electric discontinuity prevention which may be caused by vibration and impact
- Zero sliding contact @100G shock (X Y Z direction)
- Metal shell cover with 4 GNDs (Solder tubs) to ensure EMI/ESD prevention performance

OUTLINE DIMENSIONS

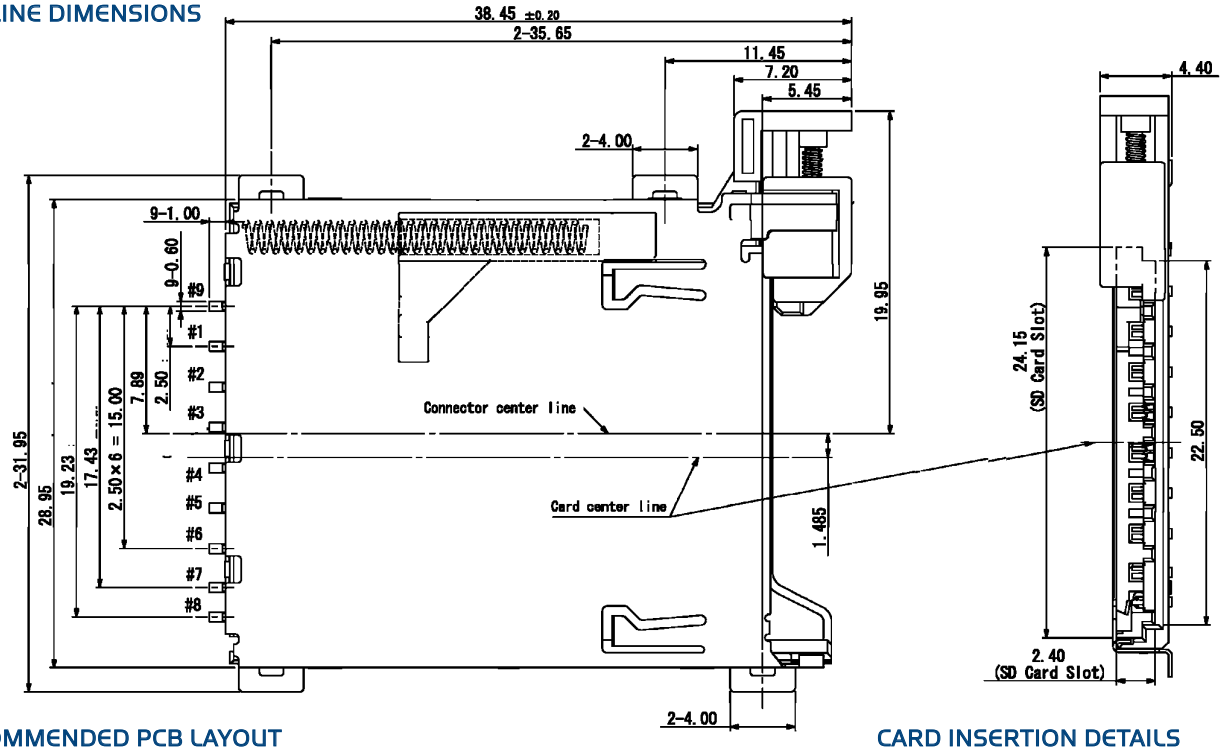

RECOMMENDED PCB LAYOUT

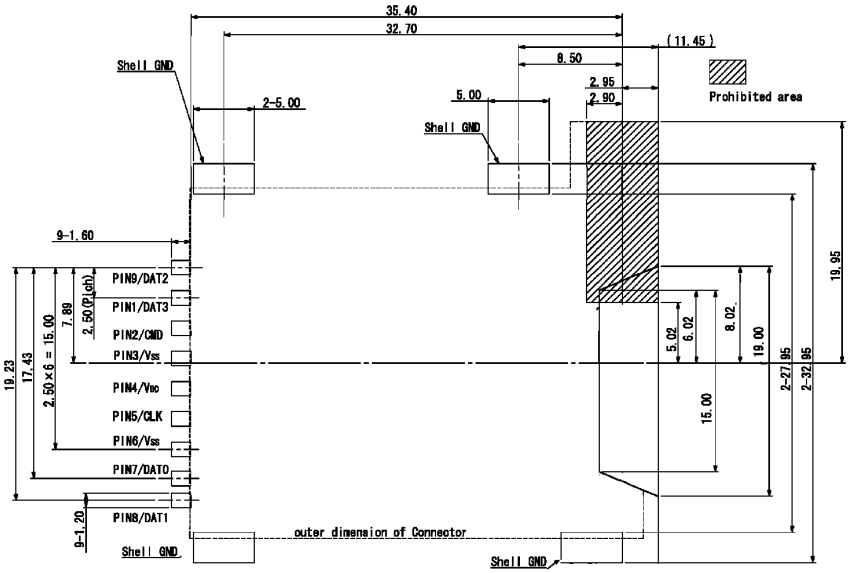

CARD INSERTION DETAILS

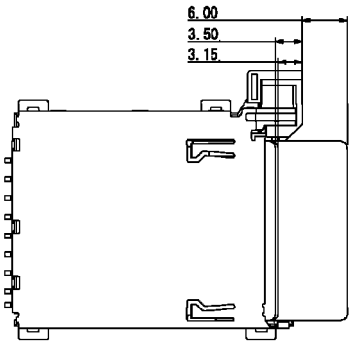

SPECIFICATIONS

Insulation Resistance:	1,000MΩ min. at 500V DC
Withstanding Voltage:	500V ACrms for 1 minute
Contact Resistance:	100mΩ at 1mA / 20mV max.
Voltage Rating:	250V AC max
Current Rating:	1A max.
Operating Temp. Range:	-25°C to +85°C
Mating Cycles:	10,000 (office environment)

PART NUMBER

PJS 008T - 3000-0

- Series No.
- Number of Contacts
- Design No.

MATERIALS AND FINISH

Insulator:	Thermal Plastic
Contacts:	Copper Alloy with selective Gold

FEATURES

- microSD plus adapter is compatible to all SD card specifications
- Easy handling of microSD

OUTLINE DIMENSIONS FOR PJS008T-3000-0

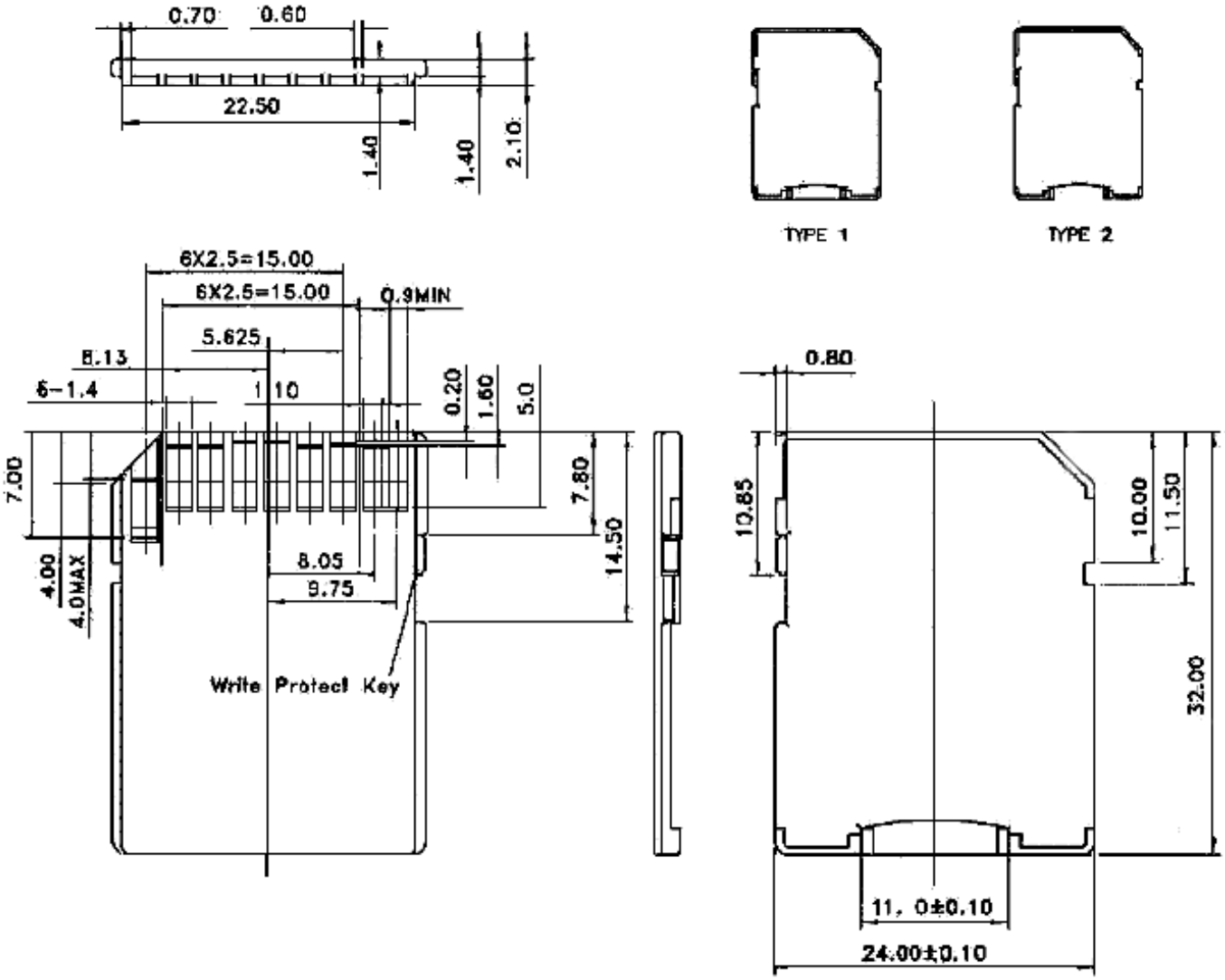

SPECIFICATIONS

Insulation Resistance:	1,000MΩ min. at 500V DC
Withstanding Voltage:	500V AC rms for 1 minute
Contact Resistance:	100mΩ at 1mA / 20mV max.
Voltage Rating:	50Vrms AC
Current Rating:	0.5A
Operating Temp. Range:	-25°C to +85°C
Coplanarity:	≤ 0.1mm
Reflow Temp.:	220°C for max.60 secs.,260° peak / 10 secs.
Mating Cycles:	10,000 (office environment)

PART NUMBER

PJS 008 - 2130 - 0

- Series No.
- Number of Contacts
- Design No.
- 0 = without Positioning Pins

MATERIALS AND FINISH

Insulator:	LCP (black)
Shielding Plate:	SUS
Contacts:	Base PB, Plating Ni-Au

FEATURES

- Super low profile of 1.5mm
- Smooth extraction function by Push-in / Push-out of card
- Card detector and lock mechanism
- Top Mount
- Special card brake (indepedant from card thickness)
- Tape & Reel packaging 1,500 pcs per reel

OUTLINE DIMENSIONS FOR PJS008-2130-0

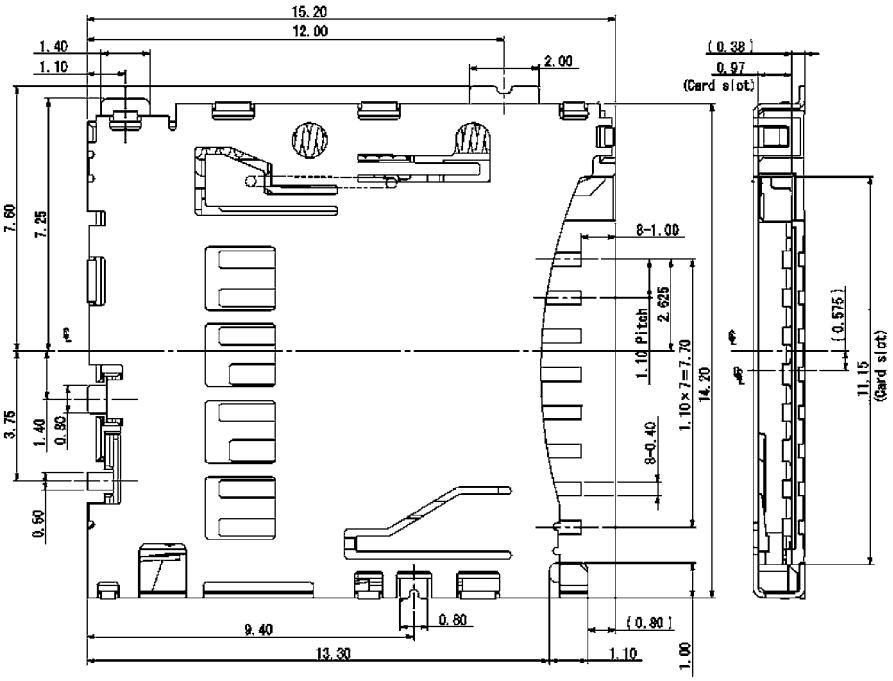

CARD INSERTION DETAILS

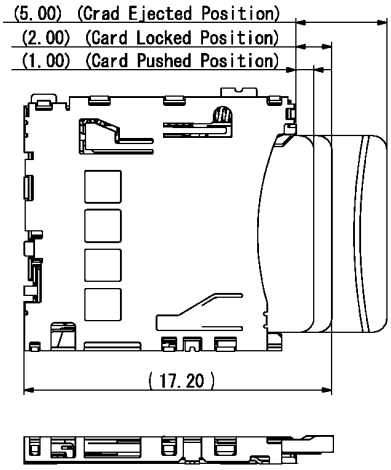

RECOMMENDED PCB LAYOUT

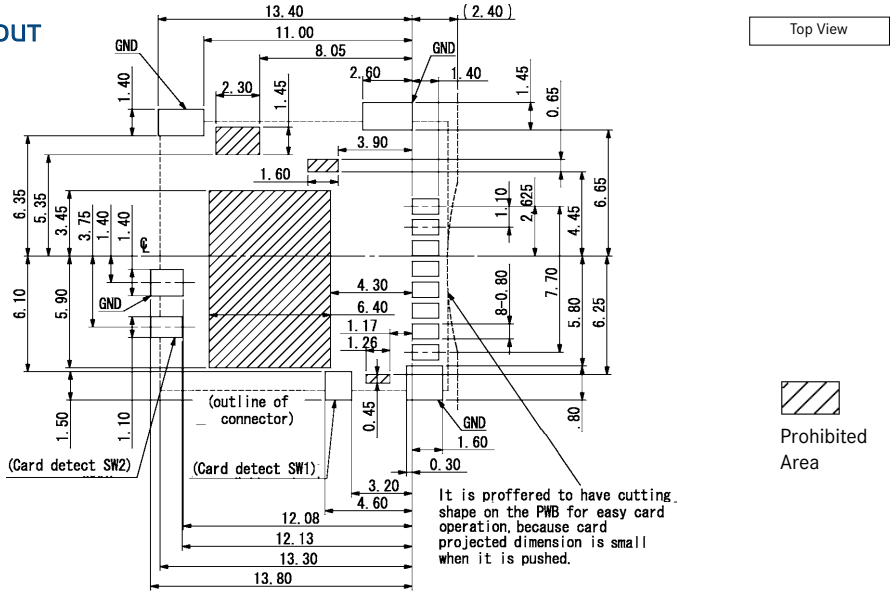

SPECIFICATIONS

Insulation Resistance:	1,000MΩ min. at 500V DC
Withstanding Voltage:	500V ACrms for 1 minute
Contact Resistance:	100mΩ at 1mA / 20mV max.
Voltage Rating:	50Vrms AC
Current Rating:	0.5A
Operating Temp. Range:	-25°C to +85°C
Coplanarity:	≤ 0.1mm
Reflow Temp.:	220°C for max. 60 secs., 260° peak / 10 secs.
Mating Cycles:	10,000 (office environment)

PART NUMBER

PJS 008 - 2003 - *

- Series No.
- Number of Contacts
- Design No.
- 0 = without Postioning Pins
  1= with Postioning Pins

MATERIALS AND FINISH

Insulator:	LCP (black)
Shielding Plate:	SUS
Contacts:	Base PB, Plating Ni-Au

FEATURES

- Card lock mechanism
- Smooth extraction function by Push-in /Push-out of card
- Reversed type
- Card detector
- Tape & Reel packaging
  (PJS008-2003-0 = 1,000 / PJS008-2003-1 = 800 pcs/reel

OUTLINE DIMENSIONS FOR PJS008-2003-0

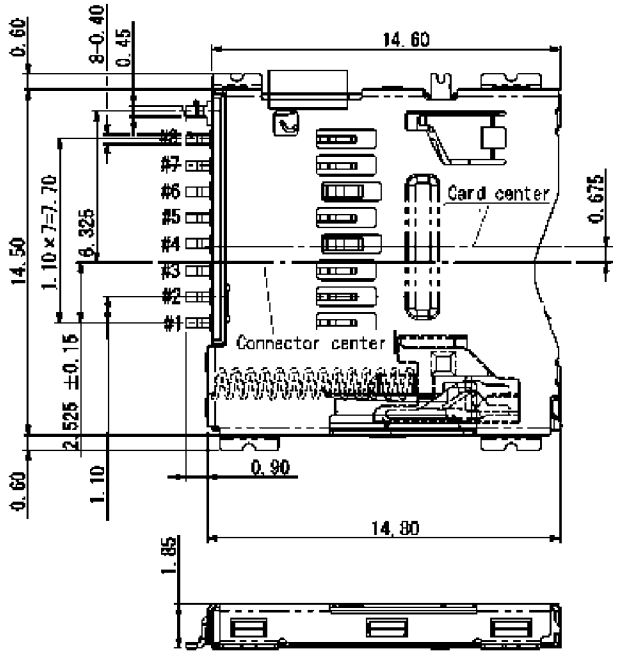

CARD INSERTION DETAILS

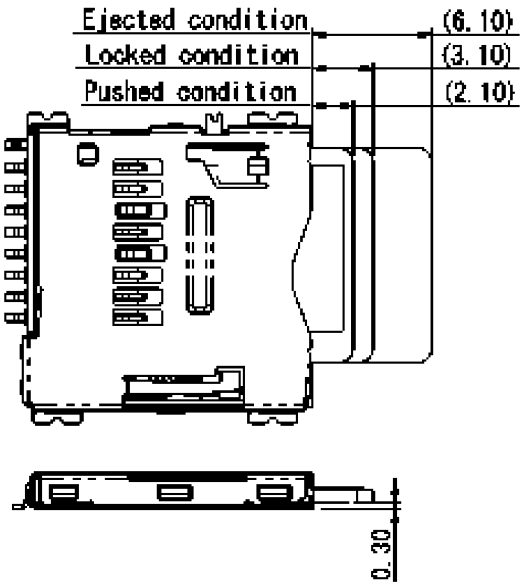

RECOMMENDED PCB LAYOUT

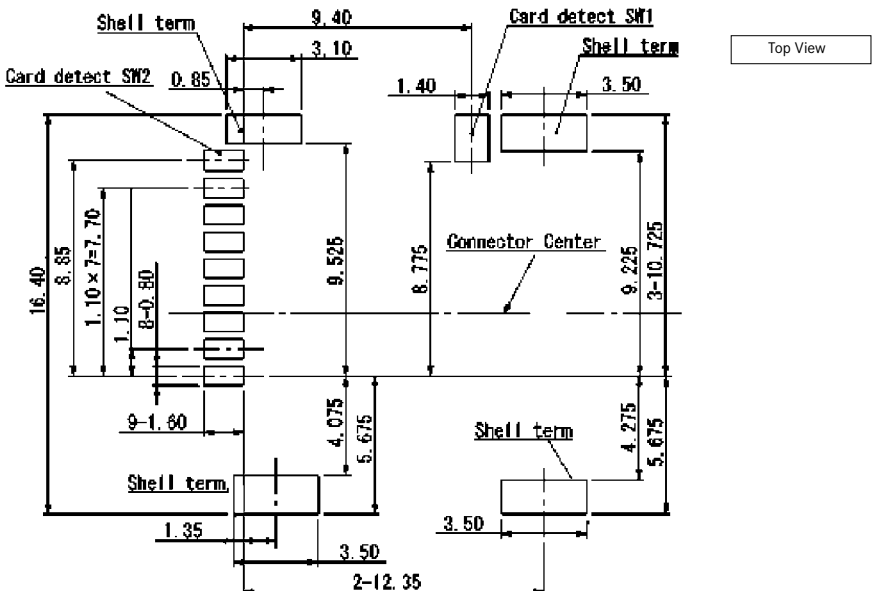

SERIES PJS MICROSD CARD READER - PUSH PUSH (TOP MOUNT)

SPECIFICATIONS

Insulation Resistance:	500MΩ min. at 500V DC
Withstanding Voltage:	500V AC rms for 1 minute
Contact Resistance:	100mΩ at 1mA / 20mV max.
Voltage Rating:	50Vrms AC
Current Rating:	0.5A
Operating Temp. Range:	-25°C to +85°C
Coplanarity:	≤ 0.1mm
Reflow Temp.:	220°C for max.60 secs.,260° peak / 10 secs.
Mating Cycles:	10,000 (office environment)

PART NUMBER

PJS 008 - 2120-0

- Series No.
- Number of Contacts
- Design No.

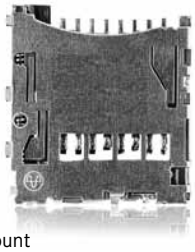

MATERIALS AND FINISH

Insulator:	LCP (black)
Shielding Plate:	SUS
Contacts:	Base PB, Plating Ni-Au

FEATURES

- Super low profile of 1.5mm
- Smooth extraction function by Push-in / Push-out of card
- Card detector and lock mechanism
- Tape & Reel packaging 1,500 pcs per reel
- Top Mount
- Special card brake (indepedant from card thickness)
- Lubricant assisted coil spring to slow card comming out

OUTLINE DIMENSIONS

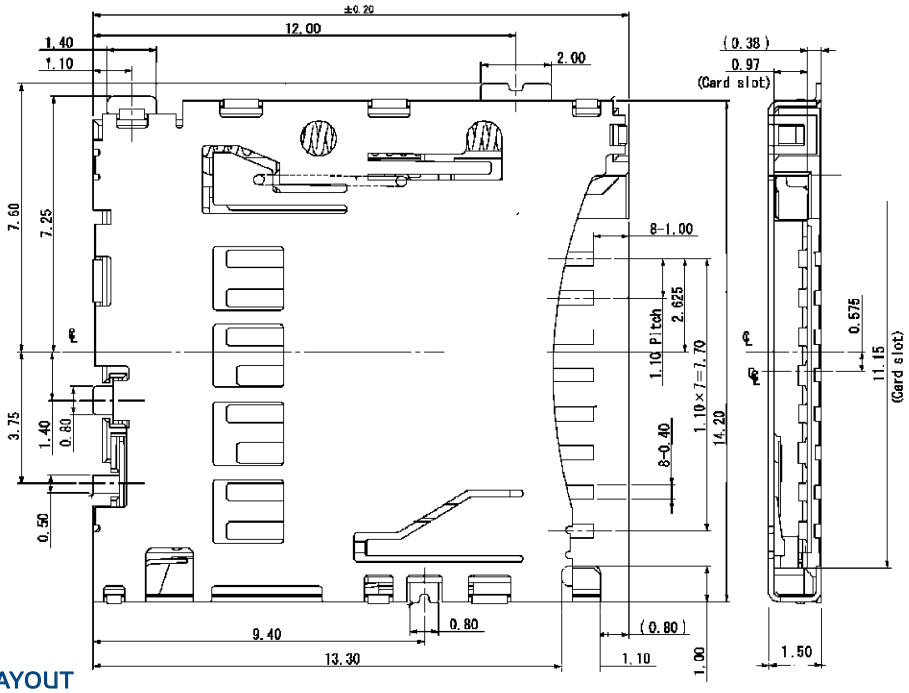

RECOMMENDED PCB LAYOUT

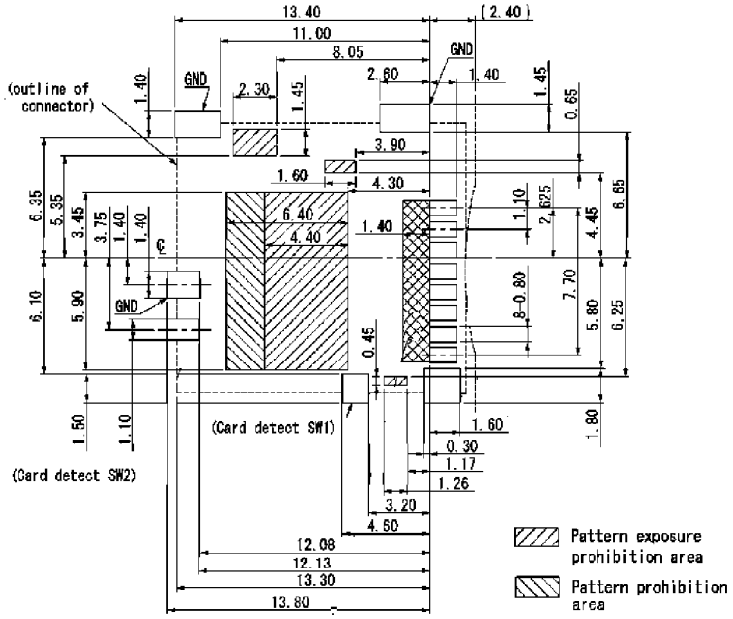

CARD INSERTION DETAILS

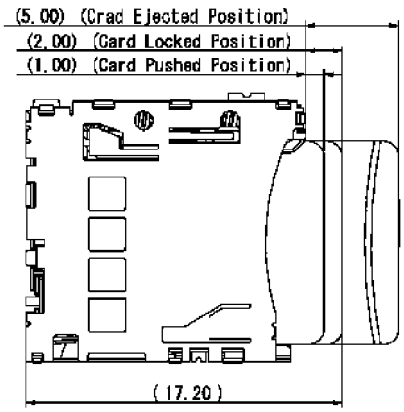

SPECIFICATIONS

Insulation Resistance:	1,000MΩ min. at 250V DC
Withstanding Voltage:	250V AC rms for 1 minute
Contact Resistance:	100mΩ at 1mA / 20mV max.
Voltage Rating:	50Vrms AC
Current Rating:	0.5A
Operating Temp. Range:	-25°C to +85°C
Mating Cycles:	10,000 times, insertion / extraction

MATERIALS AND FINISH

Insulator:	LCP
DIP Terminals:	Brass, Plating Ni / Tin
Contacts:	PB, Plating Ni-Au / Tin

FEATURES

- Vertical insertion
- Small board space
- Robust dip soldering terminal
- Sequencial mating / unmating contacts
- ROHS compliant

PART NUMBER

PJS 008U - 3000 - 0

- Series No.
- Number of Contacts
- Design No.
- 0 = without Postioning Pins

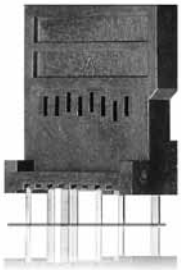

OUTLINE DIMENSIONS FOR PJS008U-3000-0

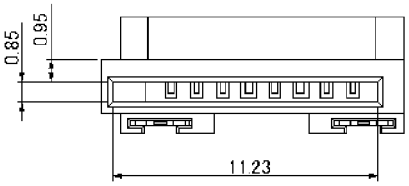

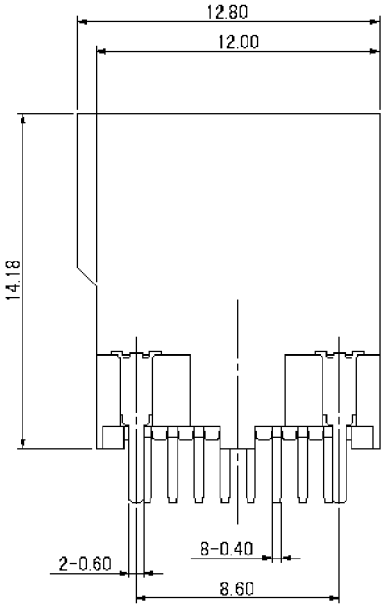

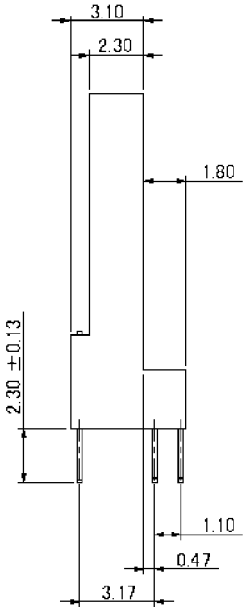

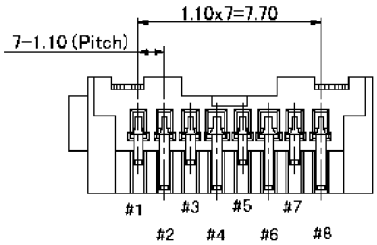

RECOMMENDED PCB LAYOUT

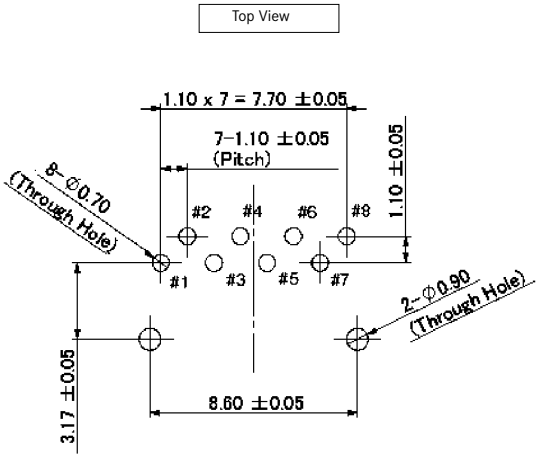

CARD INSERTION DETAILS

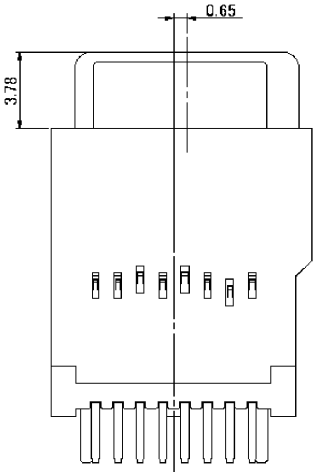

SPECIFICATIONS

Insulation Resistance:	1,000MΩ min. at 500V DC
Withstanding Voltage:	500V ACrms for 1 minute
Contact Resistance:	80mΩ initial
Voltage Rating:	10V max.
Current Rating:	0.5A max.
Operating Temp. Range:	-25°C to +85°C
Mating Cycles:	10,000 insertions

MATERIALS AND FINISH

Insulator:	LCP
Shielding Plate:	SUS
Contacts:	Base - Phosphor Bronze
	Mating area - Plating Ni-Au
	Solder area - Ni-A

FEATURE

- Easy handling due to hinged cover
- Card detector

PART NUMBER

PJS 008T - 0000-0

- Series No.
- Number of Contacts
- Design No.

OUTLINE DIMENSIONS FOR PJS008T-0000-0

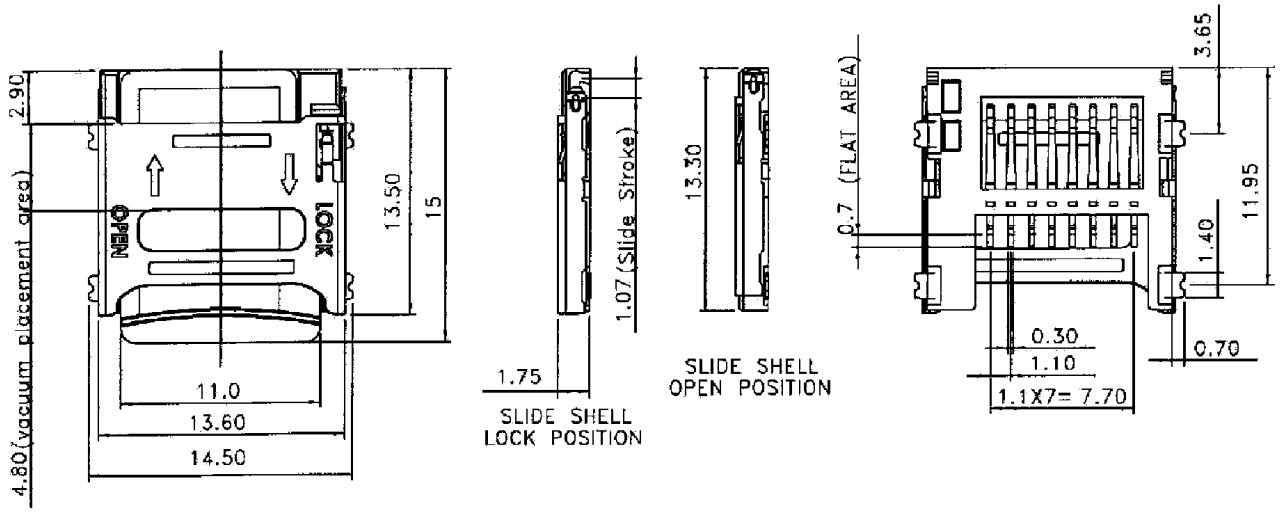

RECOMMENDED PCB LAYOUT

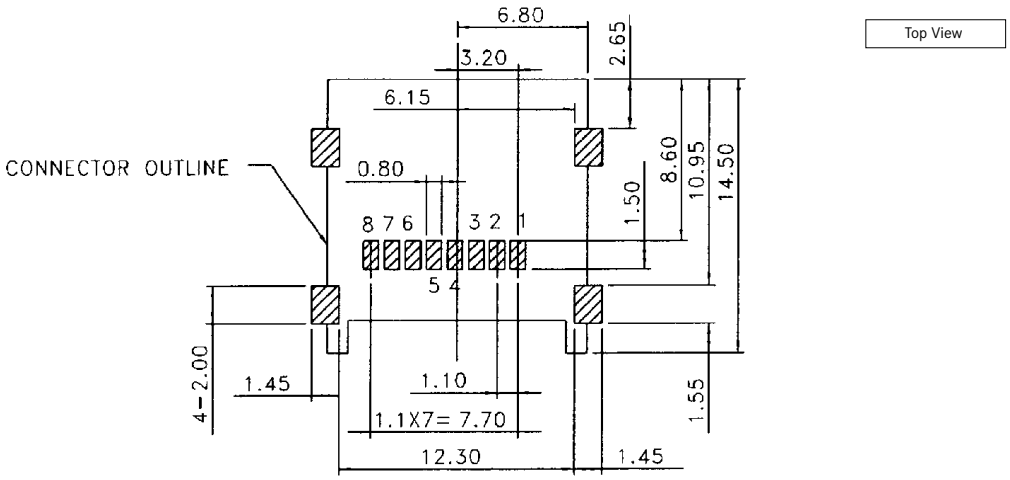

PART NUMBER

FUS006 - 8500-0

Series No.

Design No.

SPECIFICATIONS

Insulation Resistance:	500MΩ min. at 500V DC
Withstanding Voltage:	500V ACrms for 1 minute
Contact Resistance:	100mΩ max. at 1mA / 20mV max.
Current Rating:	0.5A
Voltage Rating.	5.0Vrms
Operating Temp. Range:	-25°C to +85°C
Mating Cycles:	5,000 insertions

MATERIALS AND FINISH

Insulator: Heat resistant plastic

Contact : Copper Alloy, Ni over Au

FEATURES

- Pull eject type
- Reversed type (top mount on request)
- 2-point contact design
- Super low profile ht. = 1.34mm max.
- EMI Protection (6 point GND)
- Tape and Reel packaging (1,000 pcs./reel)

OUTLINE CONNECTOR DIMENSIONS

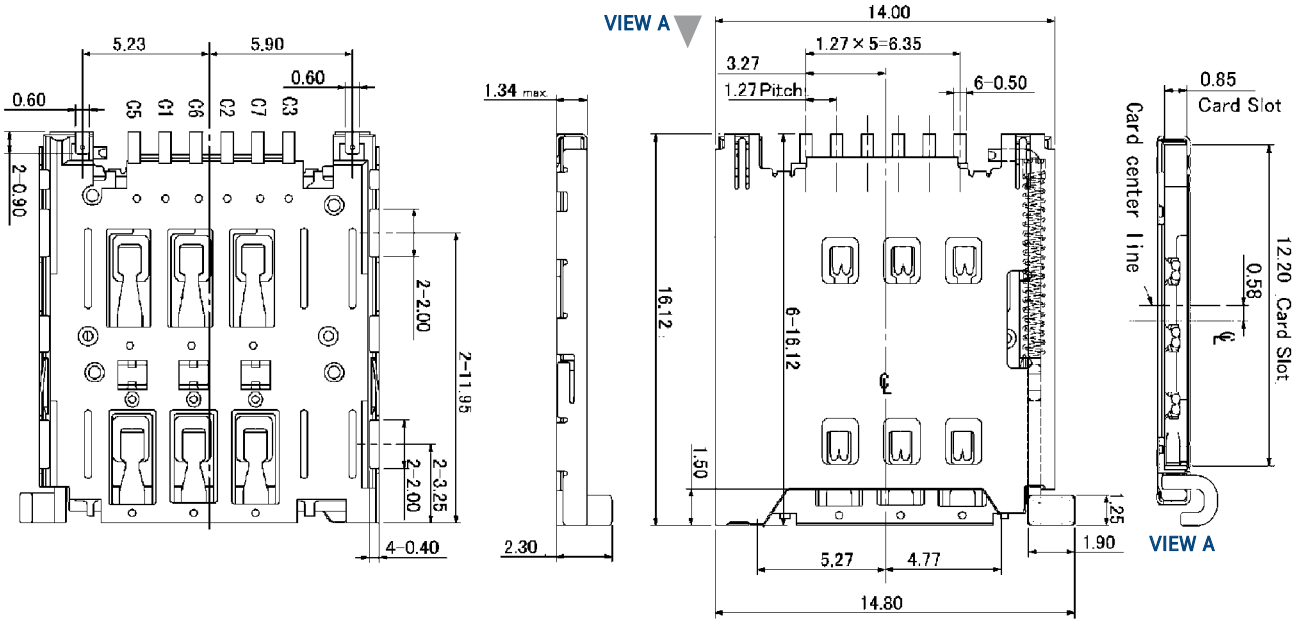

CARD INSERTION

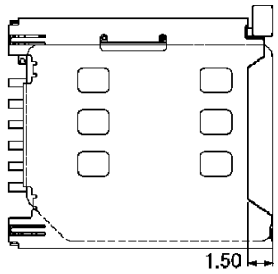

Card locked position

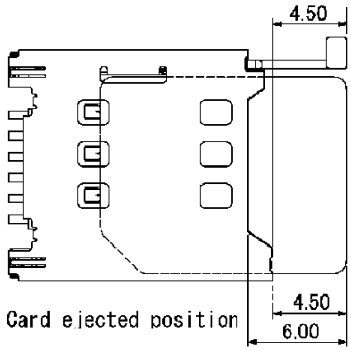

Card ejected position

RECOMMENDED PCB LAYOUT

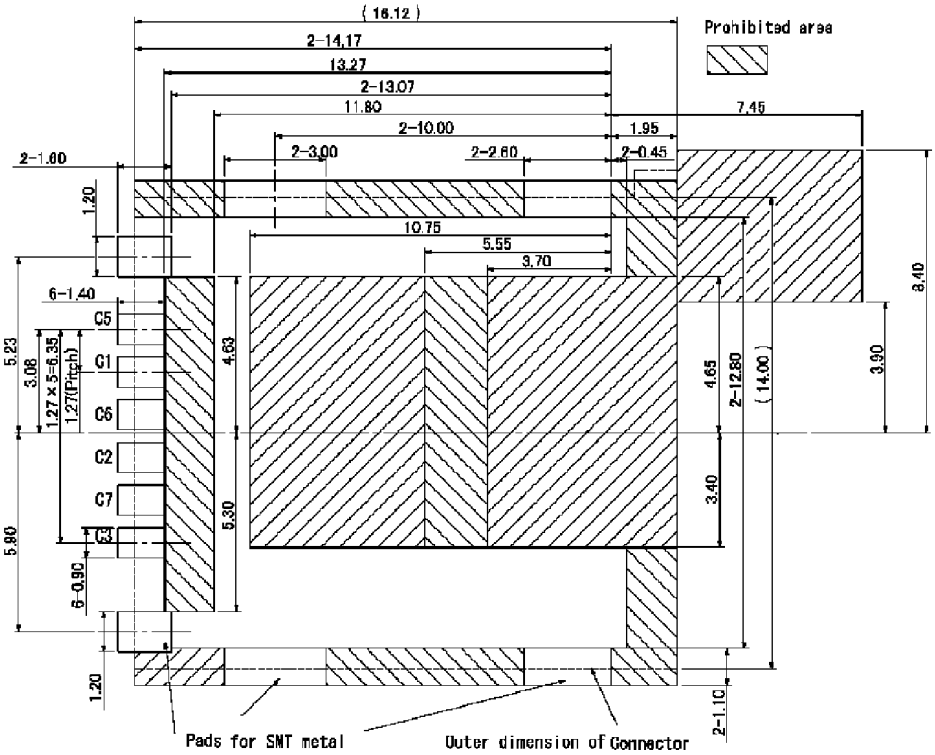

SPECIFICATIONS

Insulation Resistance:	500MΩ min. at 500V DC
Withstanding Voltage:	250V ACrms for 1 minute
Contact Resistance:	100mΩ max. at 10mA / 20mV max.
Current Rating:	0.5A
Voltage Rating.	5.0Vrms
Operating Temp. Range:	-55°C to +85°C
Mating Cycles:	5,000 insertions

MATERIALS AND FINISH

Insulator:	LCP, glass filled (UL94V-0)
Contact Plating:	Mating Face - Gold over Nickel
	Solder Tails - Gold over Nickel

PART NUMBER

FMS006Z - 200 - *

- Series No.
- Design No.
- 0 = Without Switch 1 = With Switch

FEATURES

- Conforms to GSM11.11 standard for the European mobile phone system
- Smooth extraction function by Push / Push mechanism
- With and without switch
- For assembly on top of the PC-Board
- Tape and Reel Packaging (800 pcs./reel)

OUTLINE CONNECTOR DIMENSIONS

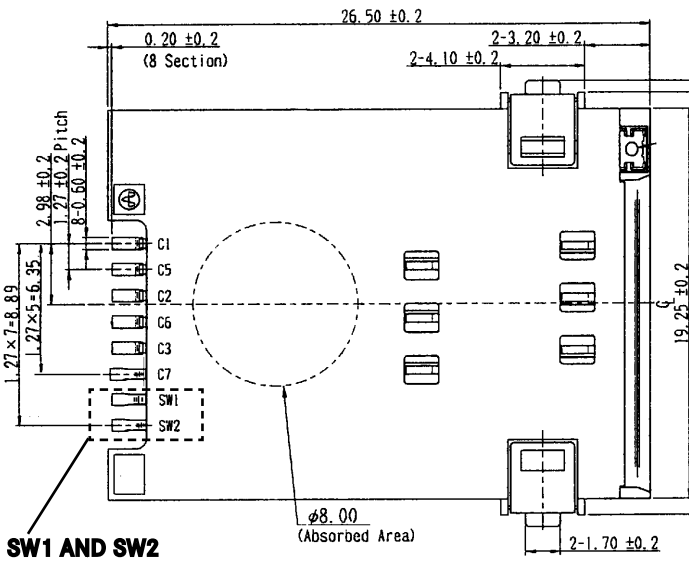

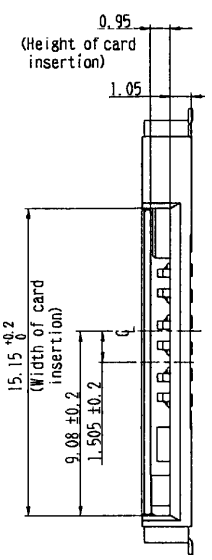

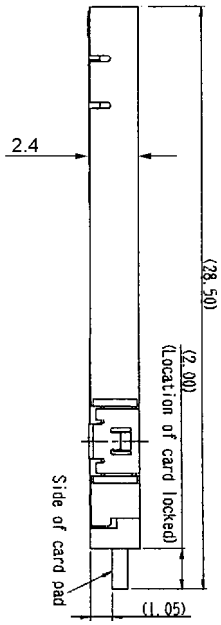

View A (with card)

RECOMMENDED PCB LAYOUT (MOUNTING SIDE)

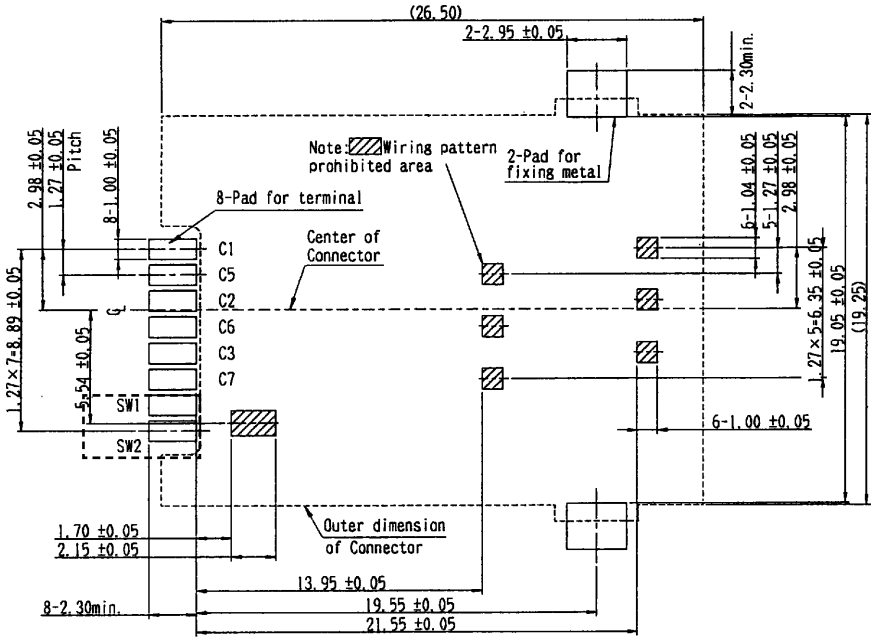

CARD INSERTION

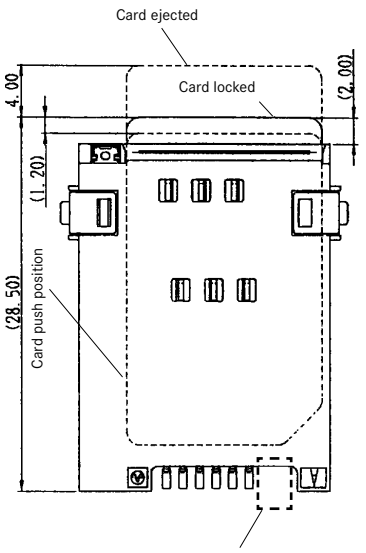

FOR FMS006Z-2001-1 ONLY

SPECIFICATIONS

Insulation Resistance:	500MΩ min. at 500V DC
Withstanding Voltage:	250V ACrms for 1 minute
Contact Resistance:	100mΩ max. at 10mA / 20mV max.
Current Rating:	0.5A
Voltage Rating.	5.0Vrms
Operating Temp. Range:	-55°C to +85°C
Mating Cycles:	5,000 insertions

MATERIALS AND FINISH

Insulator:	LCP, glass filled (UL94V-0)
Contact Plating:	Mating Face - Gold over Nickel
	Solder Tails - Gold over Nickel

PART NUMBER

FMS006Z - 210 * - 0

- Series No.
- Design No.
- 0 = Without Switch 1 = With Switch

FEATURES

- Conforms to GSM11.11 standard for the European mobile phone system
- Smooth extraction function by Push / Push mechanism
- With and without switch
- For assembly on the bottom of the PC-Board
- Tape and Reel Packaging (800 pcs./reel)

OUTLINE CONNECTOR DIMENSIONS

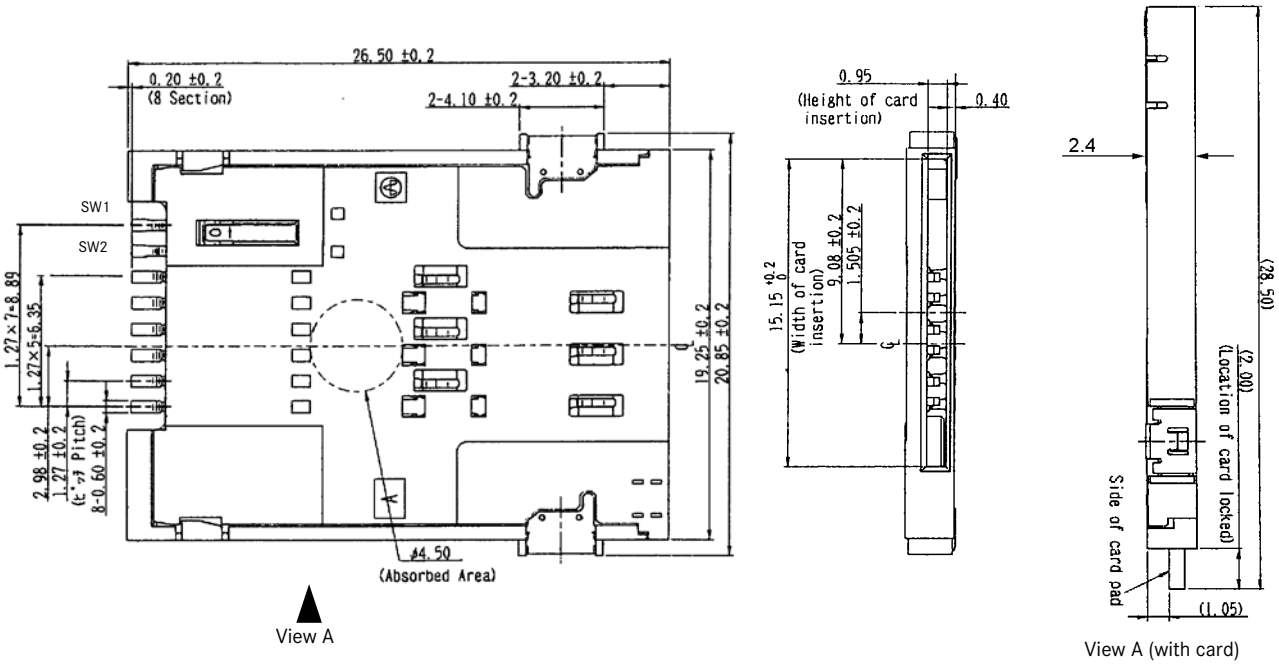

RECOMMENDED PCB LAYOUT (MOUNTING SIDE)

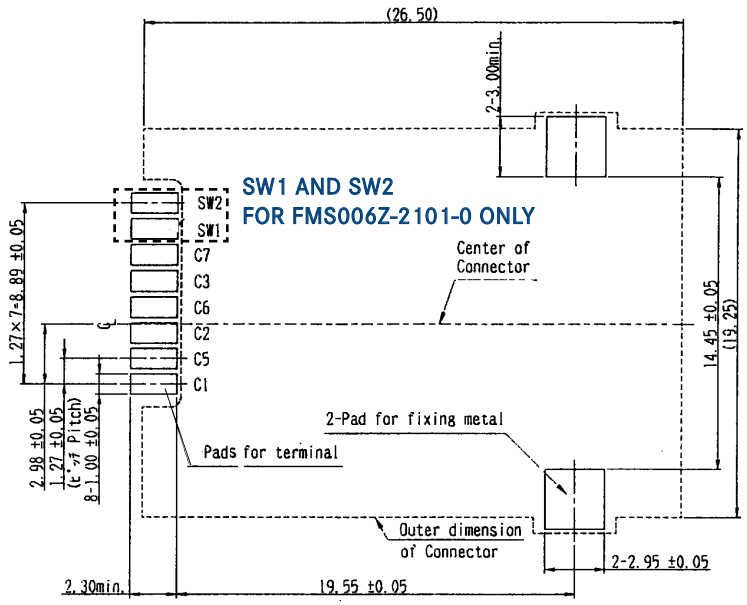

CARD INSERTION

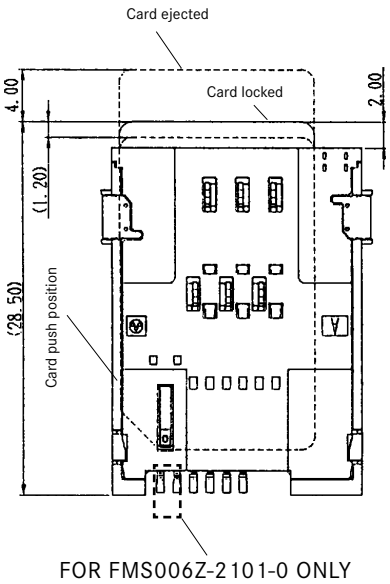

FOR FMS006Z-2101-0 ONLY

SPECIFICATIONS

Insulation Resistance:	500MΩ min. at 500V DC
Withstanding Voltage:	250V ACrms for 1 minute
Contact Resistance:	100mΩ max. at 10mA / 20mV max.
Current Rating:	0.5A
Voltage Rating.	5.0Vrms
Operating Temp. Range:	-55°C to +85°C
Mating Cycles:	5,000 insertions

PART NUMBER

FMS006 - 2310 - 0

- Series No.
- Design No
- 0 = without Switch

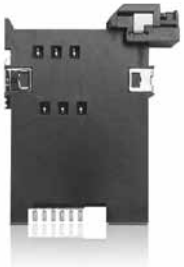

MATERIALS AND FINISH

Insulator:	LCP, glass filled (UL94V-0)
Contact Plating:	Mating Face - Gold over Nickel
	Solder Tails - Gold over Nickel

FEATURES

- Conforms to GSM11.11 standard for the European mobile phone system
- With extra locking mechanism to secure the SIM card inside the connector during shock and vibration
- Smooth extraction function by Push / Lock mechanism
- Without switch
- For assembly on top of the PC-Board
- Tape and Reel Packaging (500 pcs./reel)

OUTLINE CONNECTOR DIMENSIONS

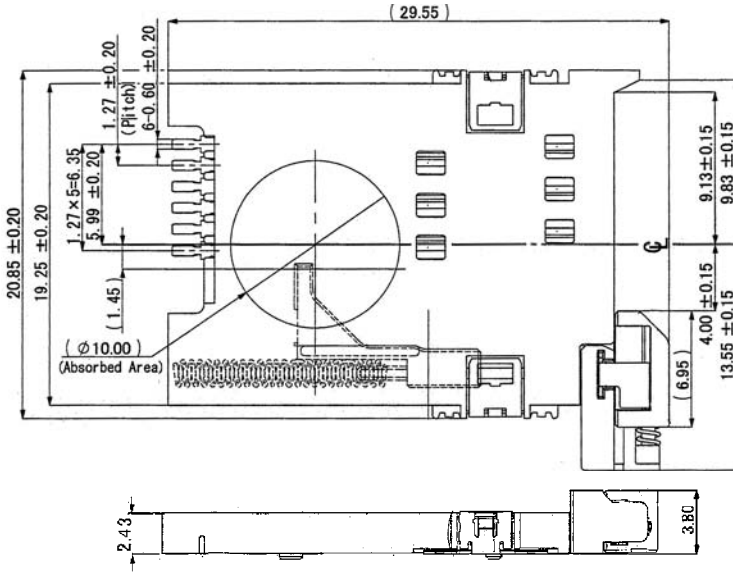

RECOMMENDED PCB LAYOUT (MOUNTING SIDE)

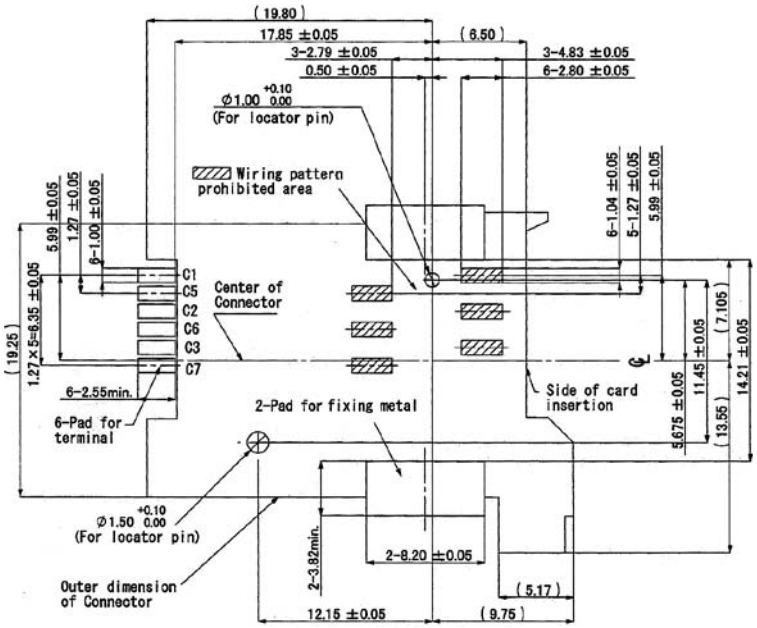

CARD INSERTION

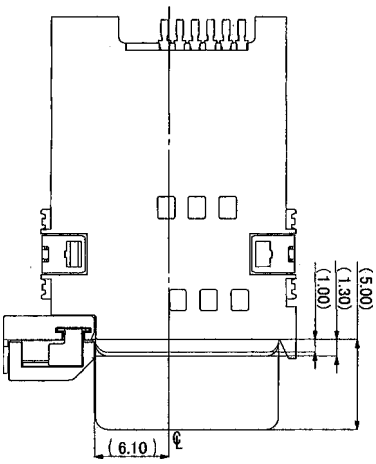

SPECIFICATIONS

Insulation Resistance:	500MΩ min. at 500V DC
Withstanding Voltage:	250V ACrms for 1 minute
Contact Resistance:	100mΩ max. at 1mA / 20mV max.
Current Rating:	0.5A
Voltage Rating.	5.0Vrms
Operating Temp. Range:	-55°C to +85°C
Mating Cycles:	5,000 insertions

PART NUMBER

FMS006 - 2620 - 0

Series No.

Design No.

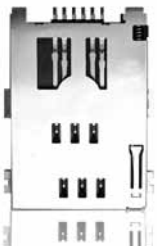

MATERIALS AND FINISH

Insulator:	LCP, glass filled (UL94V-0)
Contact Plating:	Mating Face - Gold over Nickel
	Solder Tails - SnCu over Nickel

FEATURES

- Conforms to GSM11.11 standard for the European mobile phone system
- Smooth extraction function by Push / Push mechanism
- Without switch
- Tape and Reel Packaging (800 pcs./reel)

OUTLINE CONNECTOR DIMENSIONS

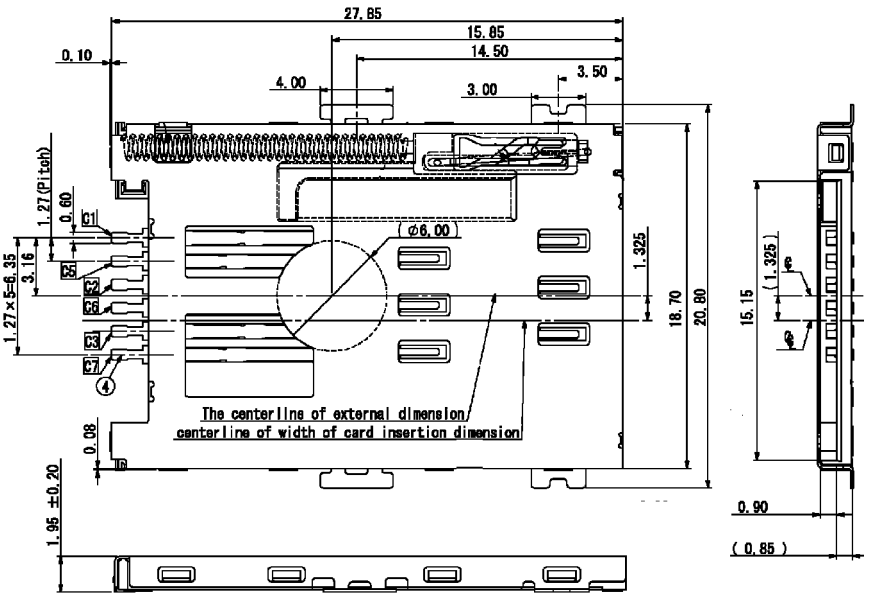

RECOMMENDED PCB LAYOUT (MOUNTING SIDE)

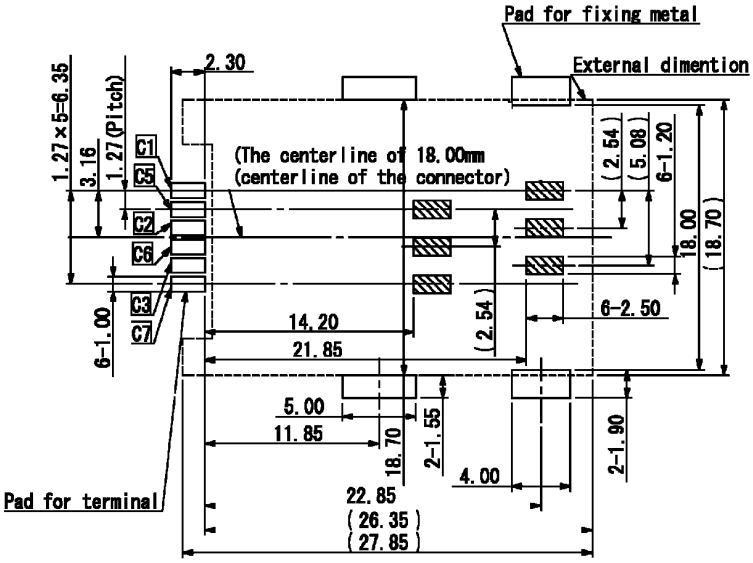

CARD INSERTION

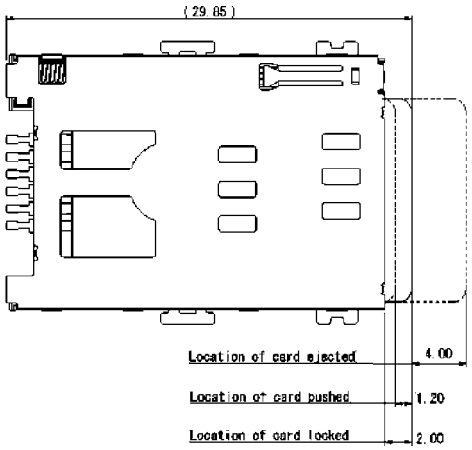

SPECIFICATIONS

Insulation Resistance:	500MΩ min. at 500V DC
Withstanding Voltage:	250V ACrms for 1 minute
Contact Resistance:	100mΩ max. at 10mA / 20mV max.
Current Rating:	0.5A
Voltage Rating.	5.0Vrms
Operating Temp. Range:	-55°C to +85°C
Mating Cycles:	5,000 insertions

PART NUMBER

FMS006 - 2610 - 0

- Series No.
- Design No
- 0 = without Switch

MATERIALS AND FINISH

Insulator:	LCP, glass filled (UL94V-0)
Contact Plating:	Mating Face - Gold over Nickel
	Solder Tails - Gold over Nickel

FEATURES

- Conforms to GSM11.11 standard for the European mobile phone system
- With extra locking mechanism to secure the SIM card inside the connector during shock and vibration
- Smooth extraction function by Push / Lock mechanism
- With switch
- For assembly on top of the PC-Board
- Tape and Reel Packaging (500 pcs./reel)

OUTLINE CONNECTOR DIMENSIONS

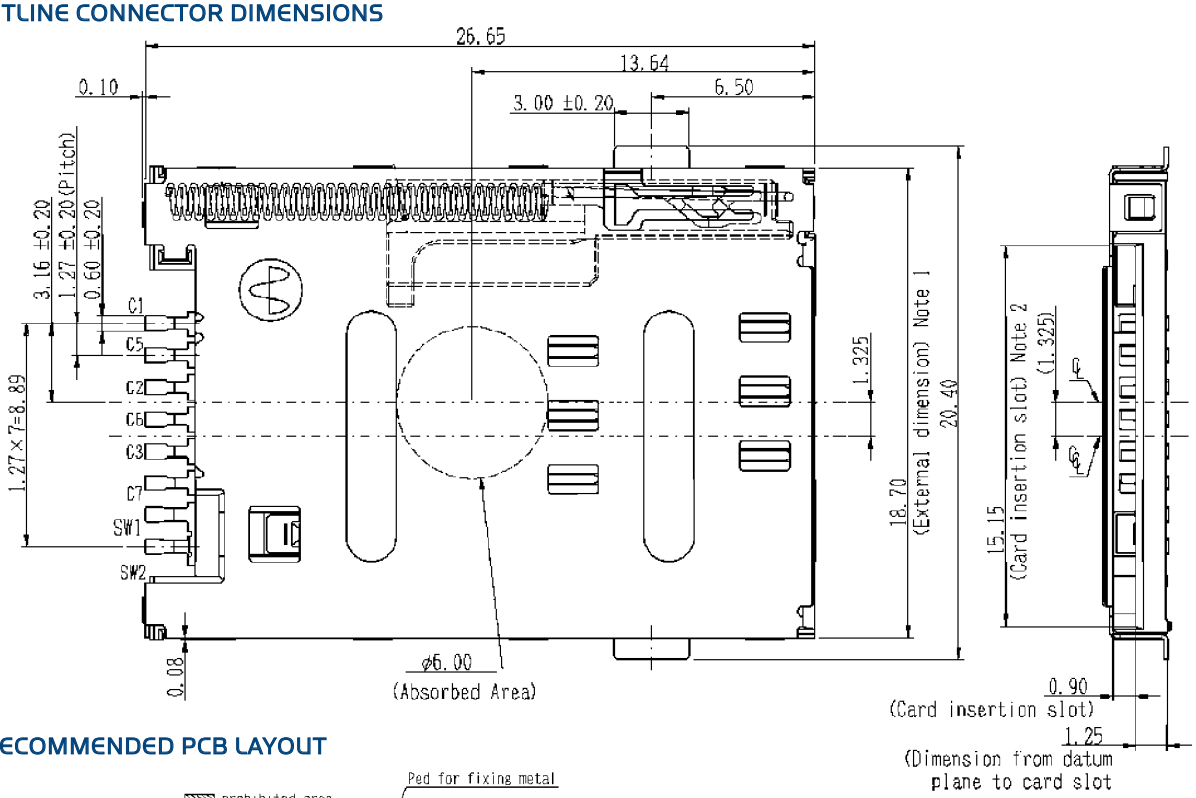

RECOMMENDED PCB LAYOUT

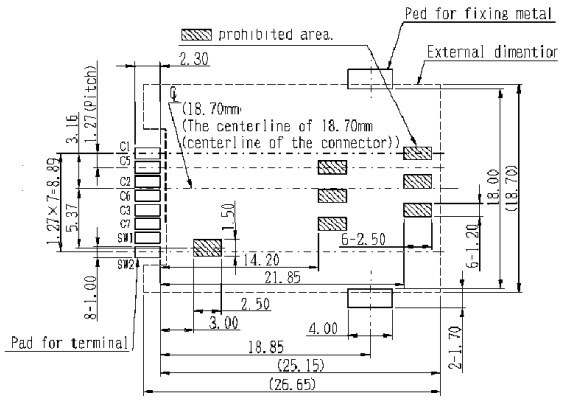

SPECIFICATIONS

Insulation Resistance:	500MΩ min. at 500V DC
Withstanding Voltage:	250V ACrms for 1 minute
Contact Resistance:	100mΩ max. at 1mA / 20mV max. Current
Rating:	0.5A
Voltage Rating.	5V AC rms
Operating Temp. Range:	-25°C to +85°C
Mating Cycles:	5,000 insertions

PART NUMBER

FMS006 - 3710 - 0

Series No.

Design No.

PART NUMBER TRAY

FMA006-3700 - 0

MATERIALS AND FINISH

Insulator:	LCP
Contact Plating:	Copper Alloy, Ni-Au
Shell:	SUS, Plating Gold over Nickel

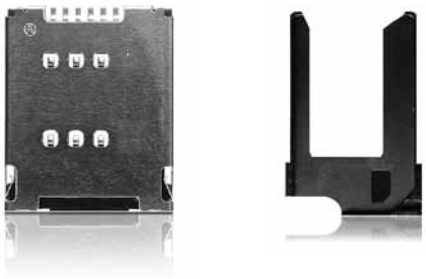

FEATURES

- Low profile 1.65mm
- Removable Tray
- Packaging Card Reader: Tape and Reel (1,200 pcs./Tape & Reel)
- Packaging for Trays: Tray (400 pcs.)

OUTLINE CONNECTOR DIMENSIONS (TOP VIEW)

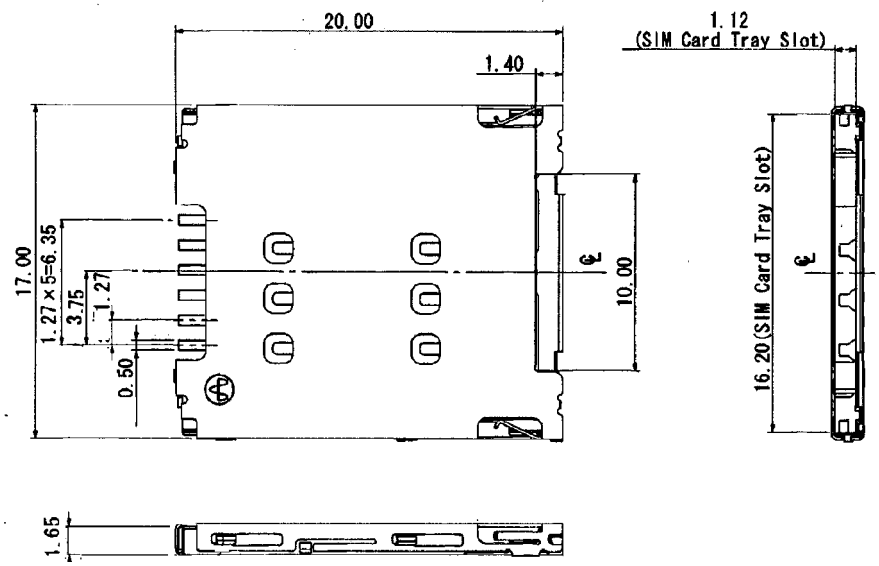

RECOMMENDED PCB LAYOUT (MOUNTING SIDE)

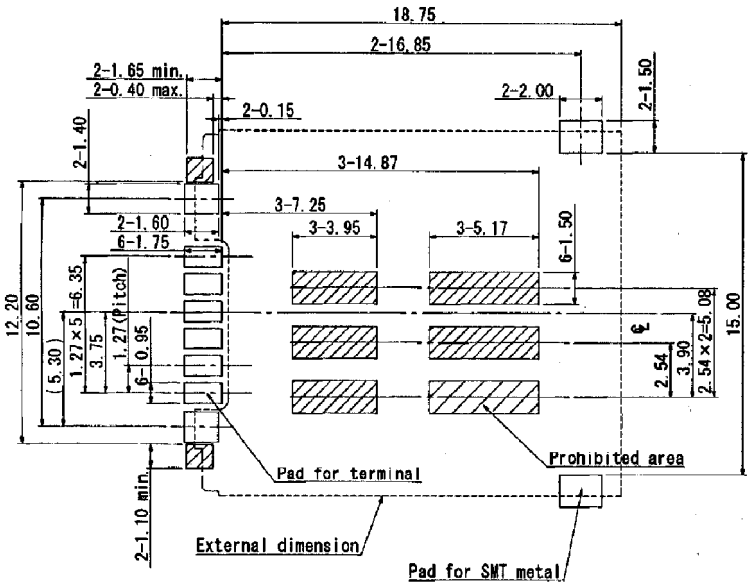

SERIES FMS SIM CARD READER REVERSED TYPE (REMOVABLE TRAY)

SPECIFICATIONS

Insulation Resistance:	500MΩ min. at 500V DC
Withstanding Voltage:	250V ACrms for 1 minute
Contact Resistance:	100mΩ max. at 1mA / 20mV max. Current
Rating:	0.5A
Voltage Rating.	5V AC rms
Operating Temp. Range:	-25°C to +85°C
Mating Cycles:	5,000 insertions

PART NUMBER

FMS006 - 3810 - 0

Series No.

Design No.

PART NUMBER TRAY

FMA006-3800 -0

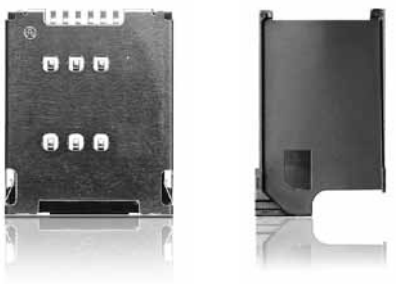

MATERIALS AND FINISH

Insulator:	LCP
Contact Plating:	Copper Alloy, Ni-Au
Shell:	SUS, Plating Gold over Nickel

FEATURES

- Low profile 1.65mm
- Removeable Tray
- Packaging Card Reader: Tape and Reel (1,200 pcs./Tape & Reel)
- Packaging for Trays: Tray (400 pcs.)

OUTLINE CONNECTOR DIMENSIONS (TOP VIEW)

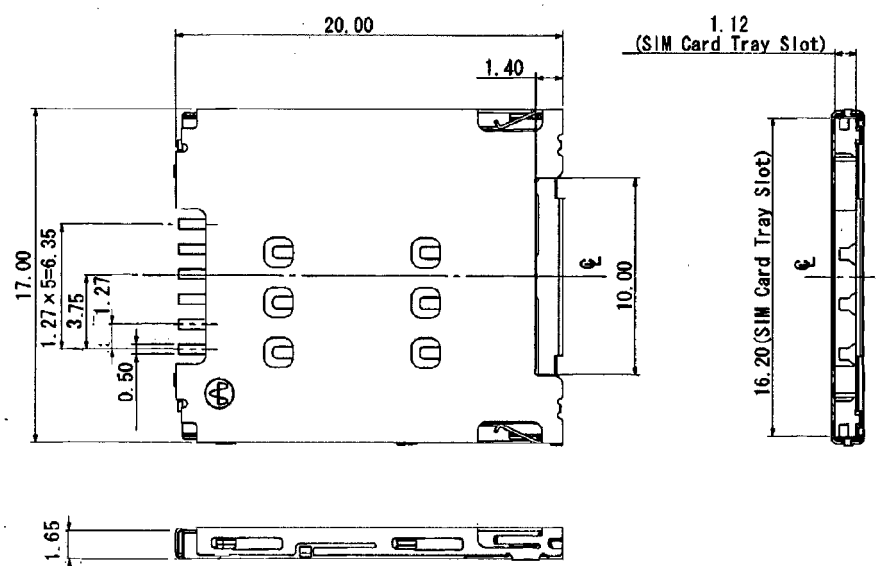

RECOMMENDED PCB LAYOUT (MOUNTING SIDE)

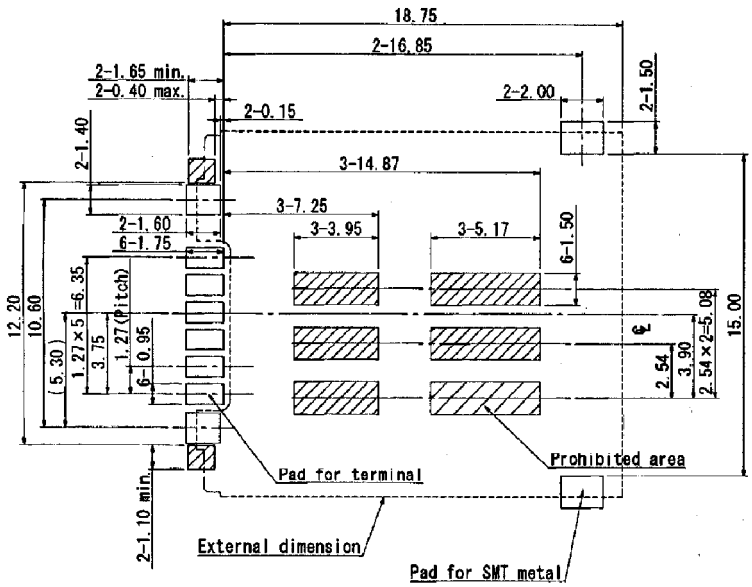

SPECIFICATIONS

Insulation Resistance:	500MΩ min. at 500V DC
Withstanding Voltage:	250V ACrms for 1 minute
Contact Resistance:	100mΩ max. at 10mA / 20mV max.
Current Rating:	0.5A
Voltage Rating.	5.0V AC rms
Operating Temp. Range:	-25°C to +85°C
Mating Cycles:	5,000 insertions

PART NUMBER

FMS006 - 5100-0

Series No.

Design No.

MATERIALS AND FINISH

Insulator:	Heat Resistant Plastic
Contact:	Copper Alloy, Ni-Au
Reinforce metal:	SUS
Metal Cover:	SUS, Plating Gold over Nickel

FEATURES

- Manual type
- Static discontinuity prevention
- Tape and Reel (1,300 pcs./reel)
- Top mount
- Super low profile design ht. = 1.40mm

OUTLINE CONNECTOR DIMENSIONS (TOP VIEW)

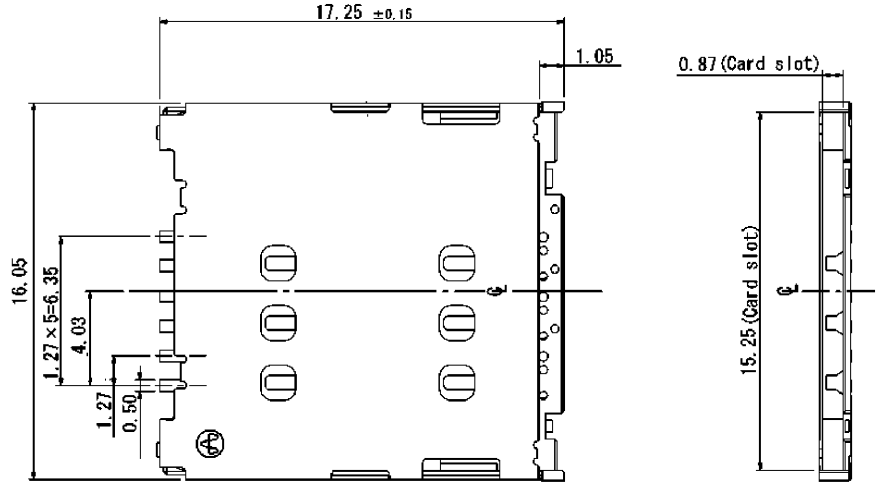

CARD INSERTION

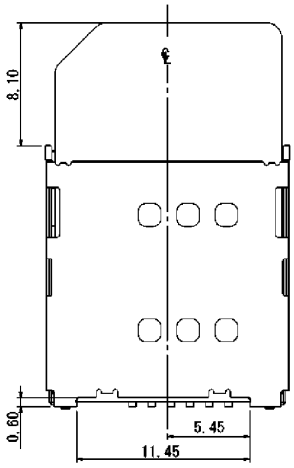

RECOMMENDED PCB LAYOUT

(mounting side)

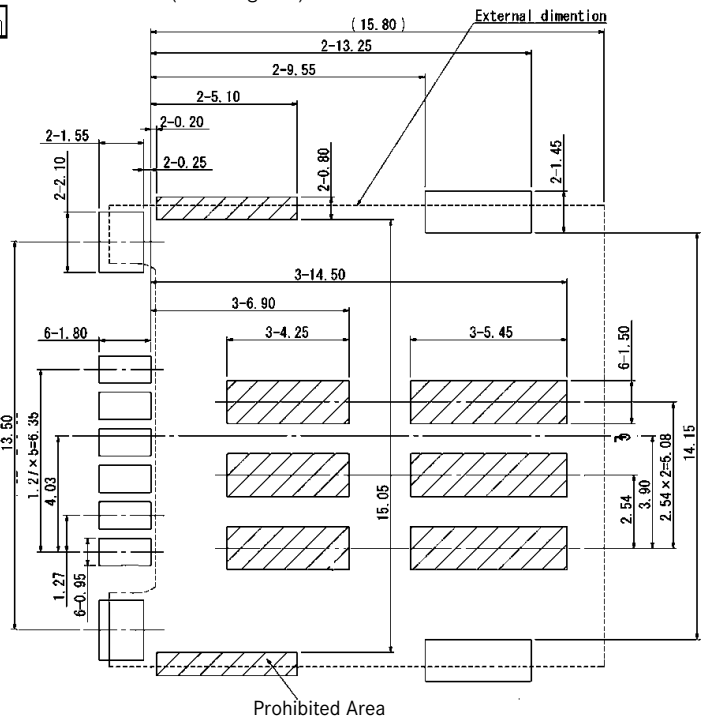

SERIES FMS SIM CARD READER (MANUAL, STD. TYPE WITHOUT SWITCH)

SPECIFICATIONS

Insulation Resistance:	500MΩ min. at 500V DC
Withstanding Voltage:	250V ACrms for 1 minute
Contact Resistance:	100mΩ max. at 1mA / 20mV max.
Current Rating:	0.5A
Voltage Rating.	5.0Vrms
Operating Temp. Range:	-25°C to +85°C
Mating Cycles:	5,000 insertions

PART NUMBER

FMS006 - 5000 - 0

Series No.

Design No.

MATERIALS AND FINISH

Insulator:	LCP, glass filled (UL94V-0)
Contact Plating:	Mating Face - Gold over Nickel
	Solder Tails - Gold over Nickel

FEATURES

- Super low profile with 1.5mm height
- Without switch
- Tape and Reel Packaging (1,000 pcs./reel)

OUTLINE CONNECTOR DIMENSIONS

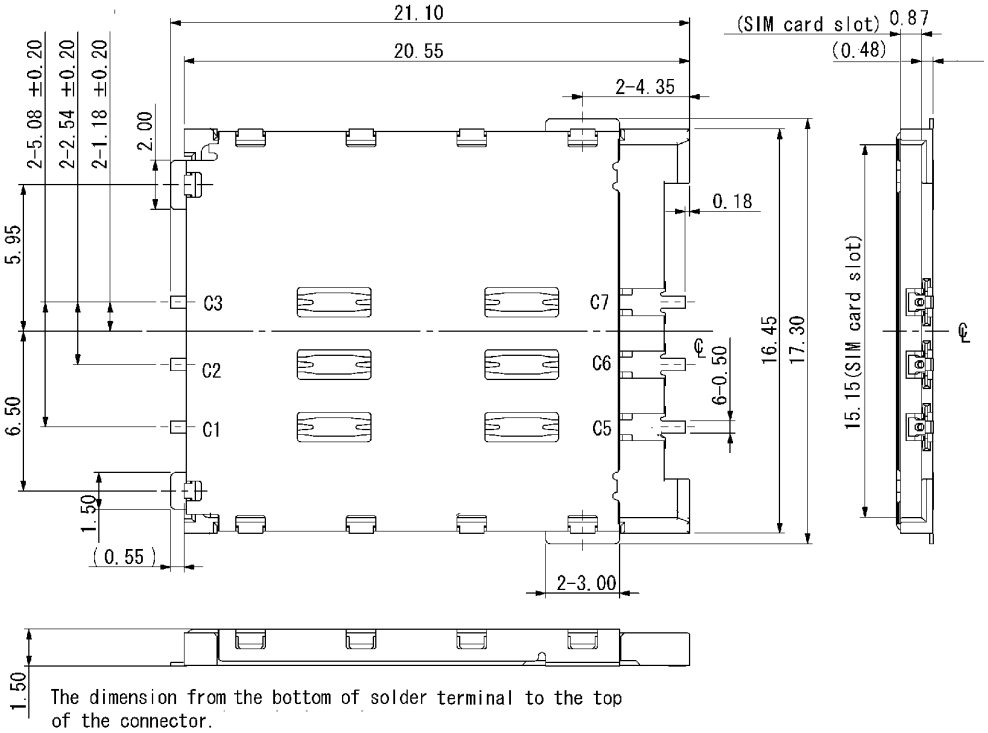

RECOMMENDED PCB LAYOUT (MOUNTING SIDE)

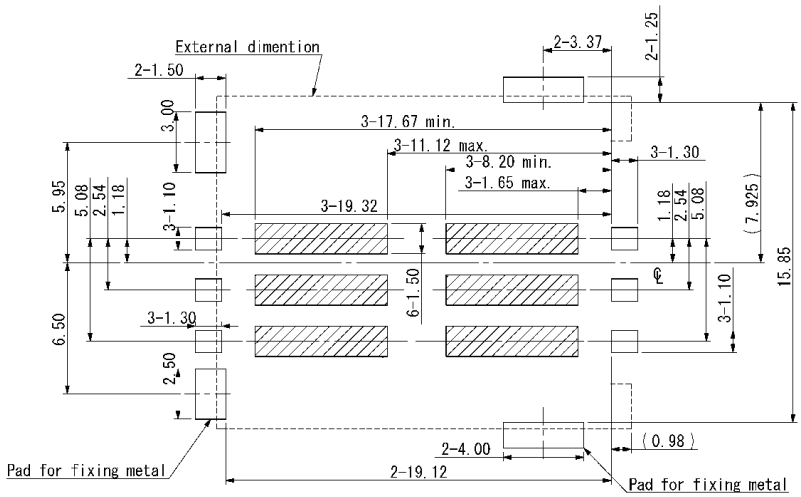

CARD INSERTION

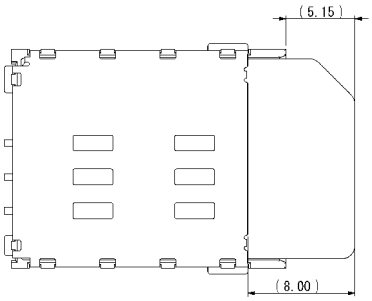

SPECIFICATIONS

Insulation resistance:	>1000 MΩ min. at 500V DC
Withstanding voltage:	250V ACrms/Minute
Contact Resistance:	50mΩ, 100 mΩ max.
Current Rating:	0.5A
Voltage Rating.	5.0V rms
Operating Temp. Range:	-55°C to +85°C
Mating Cycles:	10,000 insertions

PART NUMBER

FMS008 - 4000 - * - EDC

- Series No.
- Design No.
- T = Top Mount R = Reversed Mount

MATERIALS AND FINISH

Insulator:	LCP
Contact:	CuSn6
Plating:	1.0µm Ni over all Contact area: Au plated, Soldering area Sn plated

FEATURES

- Number of contacts 8 (SIM type)
- Top and reversed mount versions available
- Separate switch can be used as option
- Packaging for Tape and Reel: 900 pcs. per reel

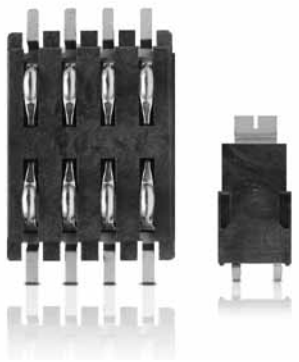

SPECIFICATIONS

Insulation resistance:	>1000 MΩ min. at 500V DC
Withstanding voltage:	250V ACrms/Minute
Contact Resistance:	50mΩ, 100 mΩ max.
Current Rating:	0.5A
Voltage Rating.	5.0V rms
Operating Temp. Range:	-40°C to +85°C
Mating Cycles:	10,000 insertions

PART NUMBER

FMS008 - 4000 - SW * * - EDC

- Series No.
- Design No.
- T = Top Mount R = Reversed
- 1 = Bar = 0.1mm 3 = Bar = 0.3mm

MATERIALS AND FINISH

Insulator:	LCP
Contact:	CuSn6
Plating:	1.0µm Ni over all,
Contact area:	Au plated, Soldering area Sn plated

FEATURES

- Number of contacts 1
- Operates normally in an open position
- Top and reversed mount versions available
- Two different thicknesses of bar available
- Packaging for Tape and Reel: 1,200 pcs. per reel

OUTLINE CONNECTOR DIMENSIONS

(Reverse Mount Type)

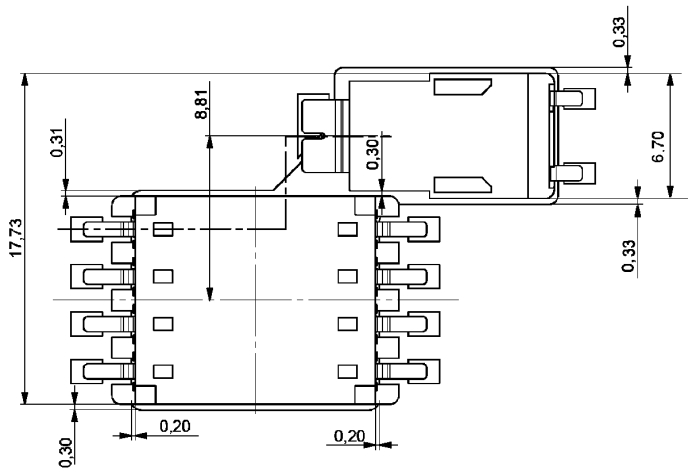

RECOMMENDED PCB LAYOUT

(Reverse Mount Type)

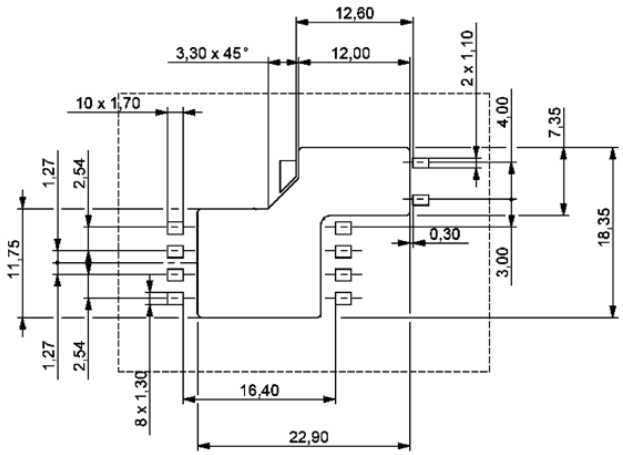

SPECIFICATIONS

Insulation Resistance:	500MΩ min. at 500V DC
Withstanding Voltage:	500V ACrms for 1 minute
Contact Resistance:	100mΩ max. at 1mA / 20mV max.
Current Rating:	0.5A
Voltage Rating.	5.0Vrms
Operating Temp. Range:	-55°C to +85°C
Mating Cycles:	5,000 insertions

PART NUMBER

FMS008 - 6001 - 0

Series No.

Design No.

MATERIALS AND FINISH

Insulator:	LCP, glass filled (UL94V-0)
Contact Plating:	Mating Face - Gold over Nickel
	Solder Tails - Gold over Nickel

FEATURES

- 8 SIM contacts
- Super low profile of 1.5mm
- Top Mount for SMT soldering
- Smooth extraction function by Push/Push mechanism
- With switch
- Tape & Reel packaging 1,000 pcs per reel

OUTLINE DIMENSIONS FOR FMS008-6001-0

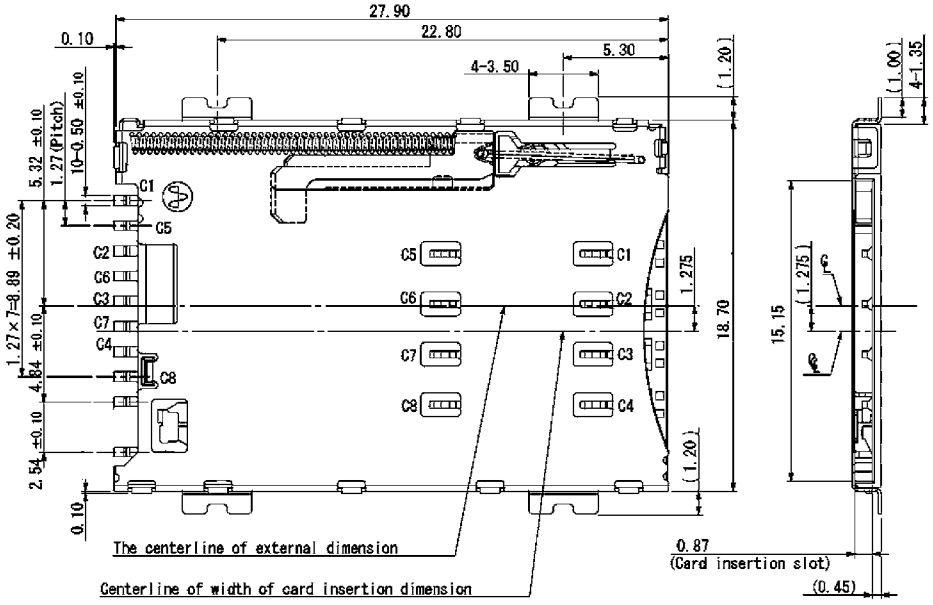

RECOMMENDED PCB LAYOUT

Top View

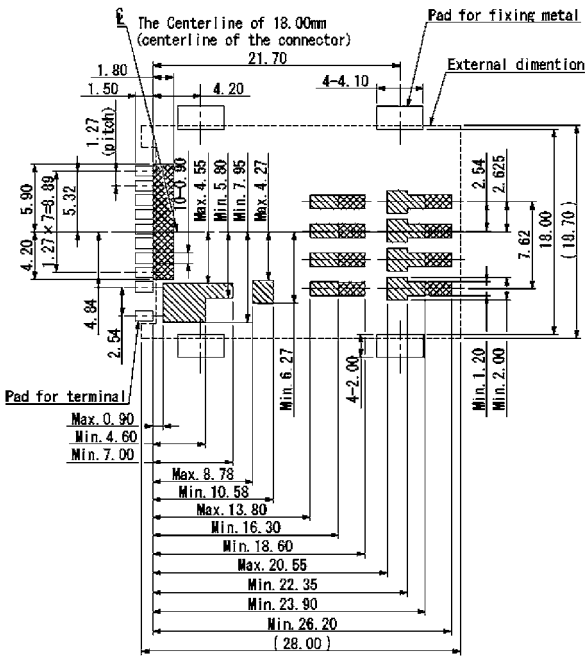

CARD INSERTION DETAILS

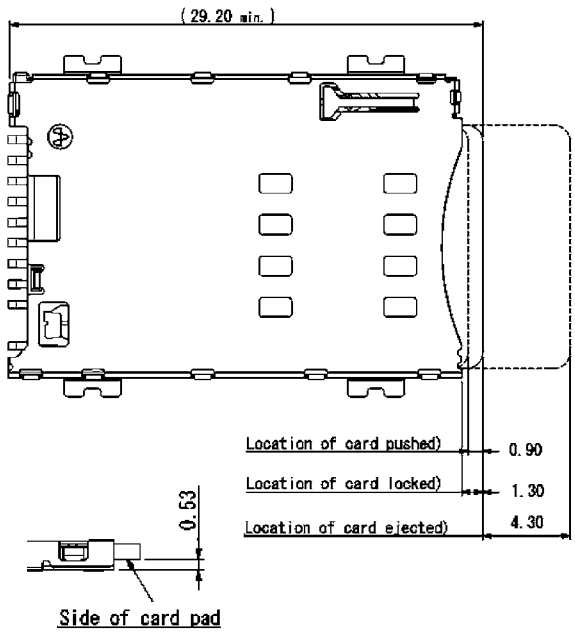

SPECIFICATIONS

Insulation Resistance:	1,000MΩ min.
Withstanding Voltage:	500V AC
Contact Resistance:	100mΩ max.
Current Rating:	0.5A max. per contact
Mating Cycles:	10,000 insertions

PART NUMBER

FRS016T - 2000 - 0V3

Series No.

Design No.

MATERIALS AND FINISH

Insulator:	PA-9T, (UL94V-0) and LCP
Contact :	Phoshor Bronze (P/P Bronze)
Contact Plating:	AU

FEATURES

- 6 pin SIM manual µSD push / push card reader
- Card detection and write protection switch
- Easy operation
- Tape and Reel packaging

OUTLINE CONNECTOR DIMENSIONS

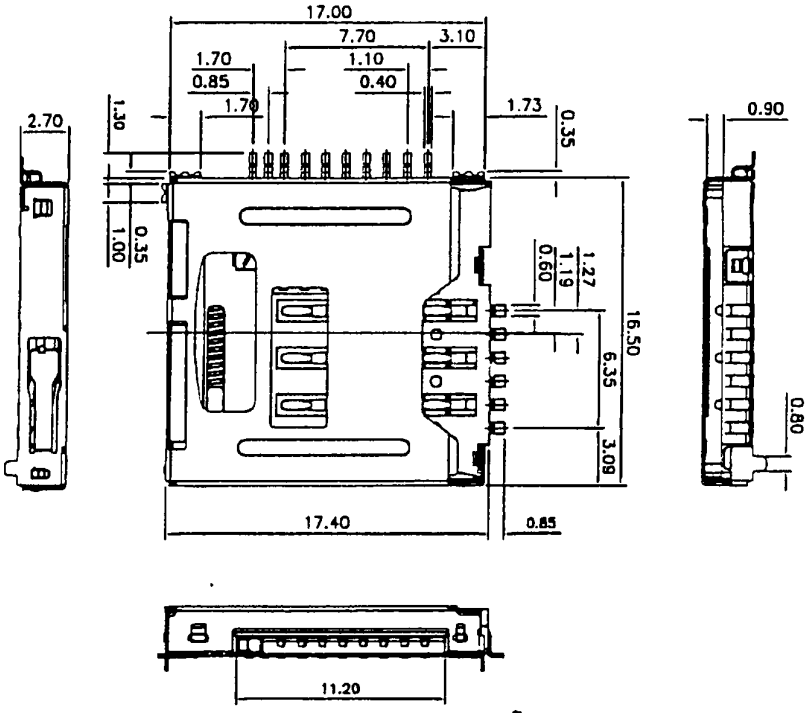

RECOMMENDED PCB LAYOUT

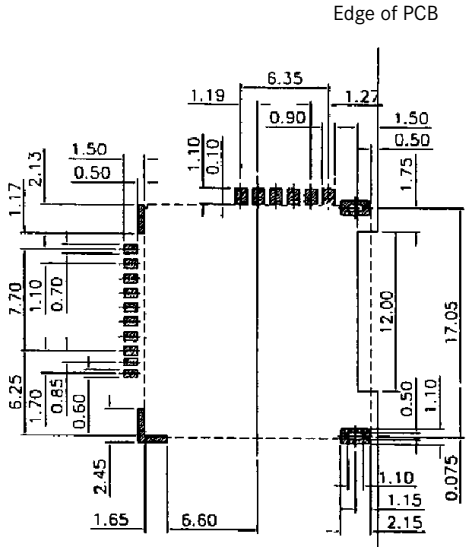

CARD INSERTION DETALS

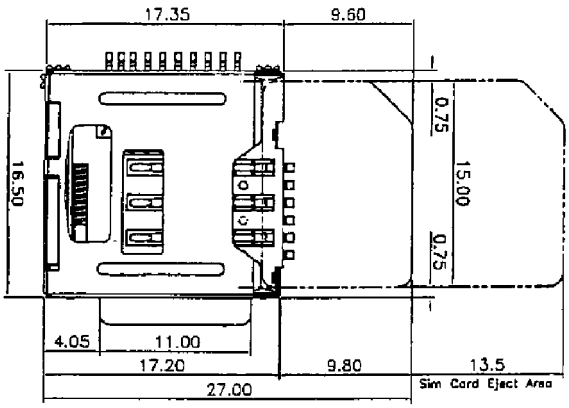

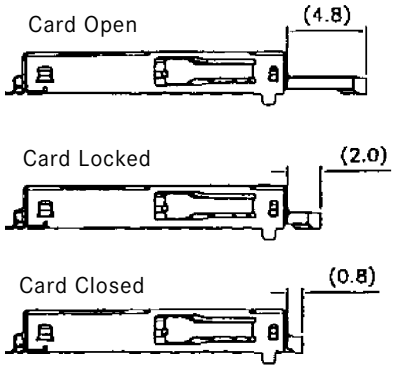

YAMAICHI ELECTRONICS SERIES FRS SD/MMC/MS DUO 3-IN-1 CARD READER (TOP MOUNT)

SPECIFICATIONS

Insulation Resistance:	1,000MΩ min.
Withstanding Voltage:	5V AC
Contact Resistance:	SD/MMC - 100mΩ max.
	Duo - 100mΩ max.
Current Rating:	0.5A max. per contact
Operating Temp. Range:	-20°C to +85°C
Mating Cycles:	10,000 insertions

PART NUMBER

FRS020 - 3100 - 0

Series No.

Design No.

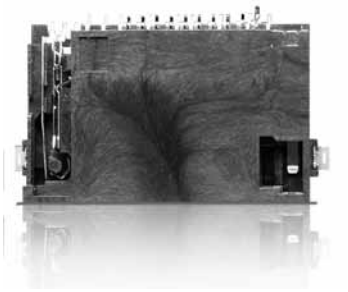

MATERIALS AND FINISH

Insulator:	LCP
Contact :	Phoshor Bronze

FEATURES

- Card Reader for SD / MMC/ MS Duo
- With card detection switch

OUTLINE CONNECTOR DIMENSIONS

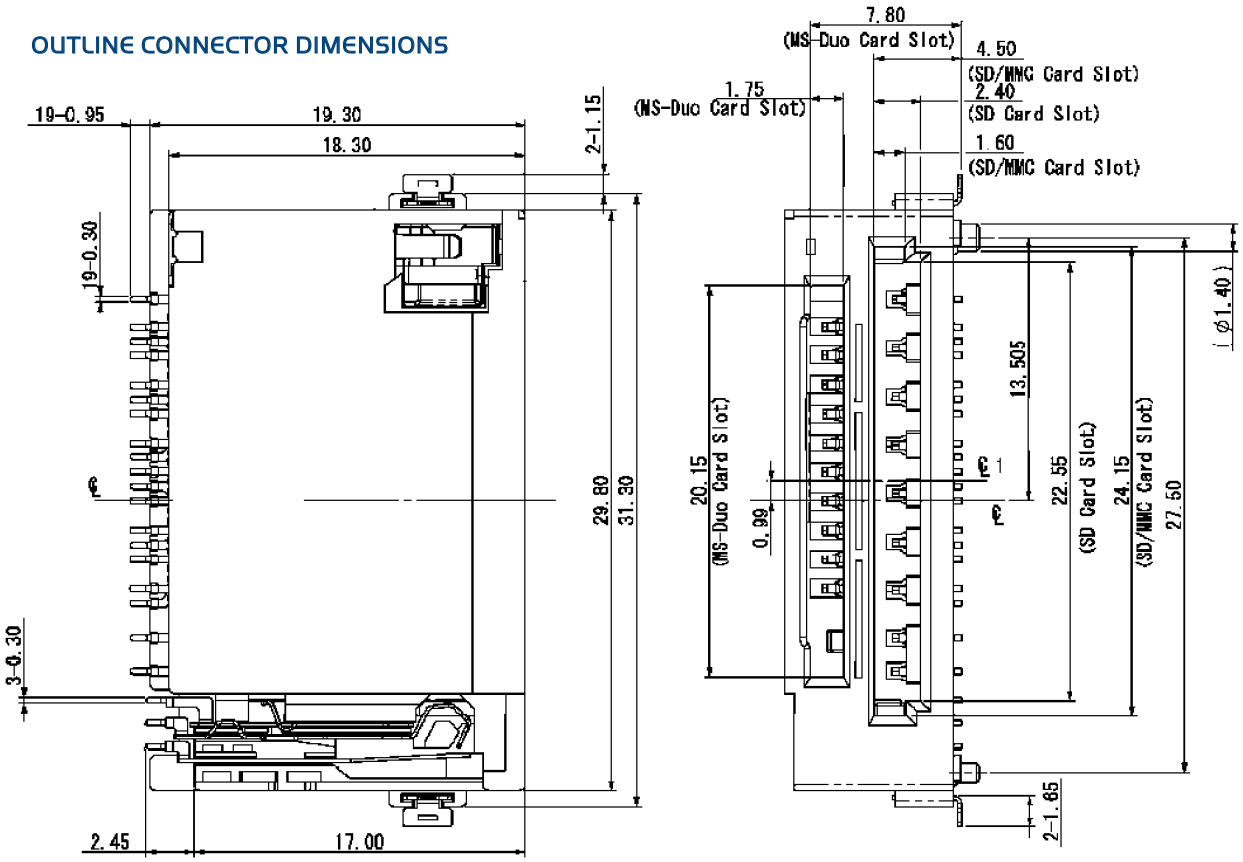

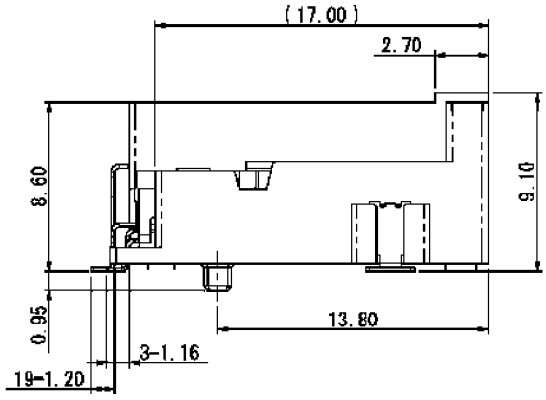

CARD INSERTION DETAILS

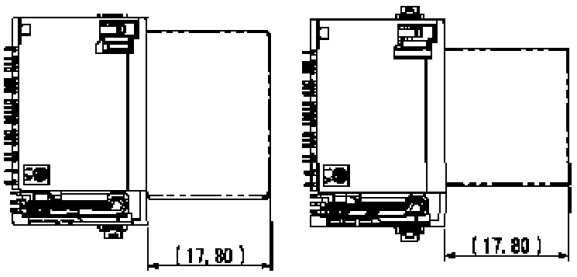

SPECIFICATIONS

Insulation Resistance:	1,000MΩ min.
Voltage Rating:	50V AC rms
Withstanding Voltage:	250V AC
Contact Resistance:	SD/MMC - 100mΩ max. Duo - 100mΩ max.
Current Rating:	0.5A max. per contact
Operating Temp. Range:	-25°C to +85°C
Mating Cycles:	10,000 insertions

PART NUMBER

FRS018 - 2310 - 0

Series No.

Design No.

MATERIALS AND FINISH

Insulator:	LCP
Contact :	Phoshor Bronze NI/AU/SN

FEATURES

- SD / MMC / MS Duo card reader push/push type
- Shielded version

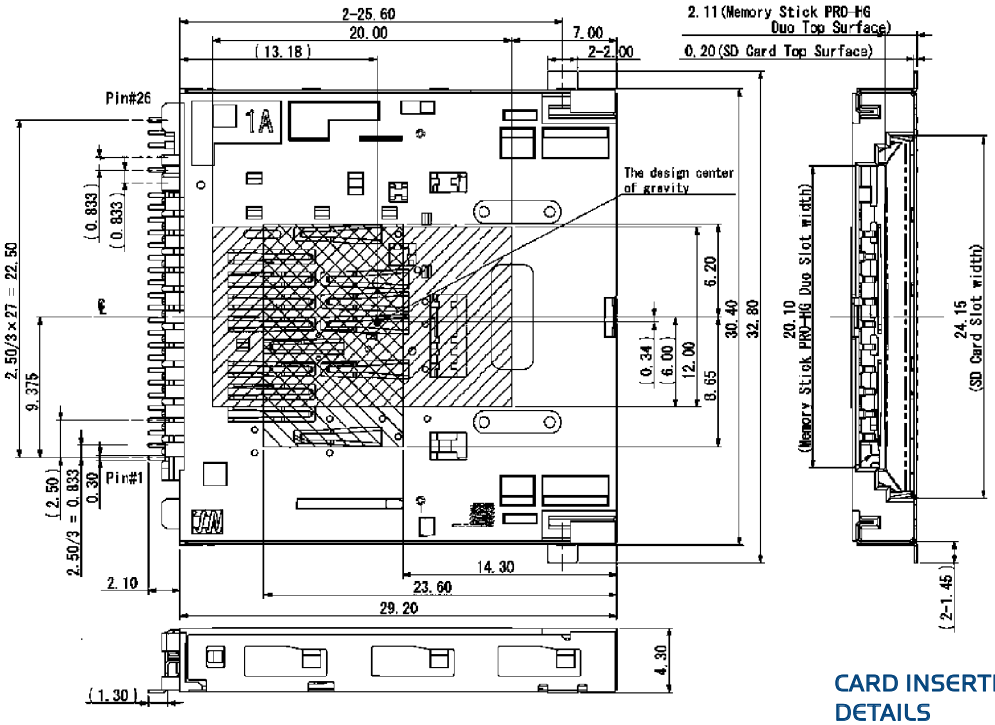

CARD INSERTION DETAILS

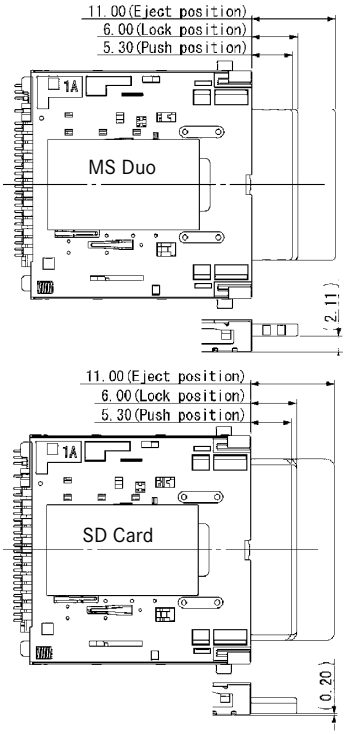

PCB LAYOUT

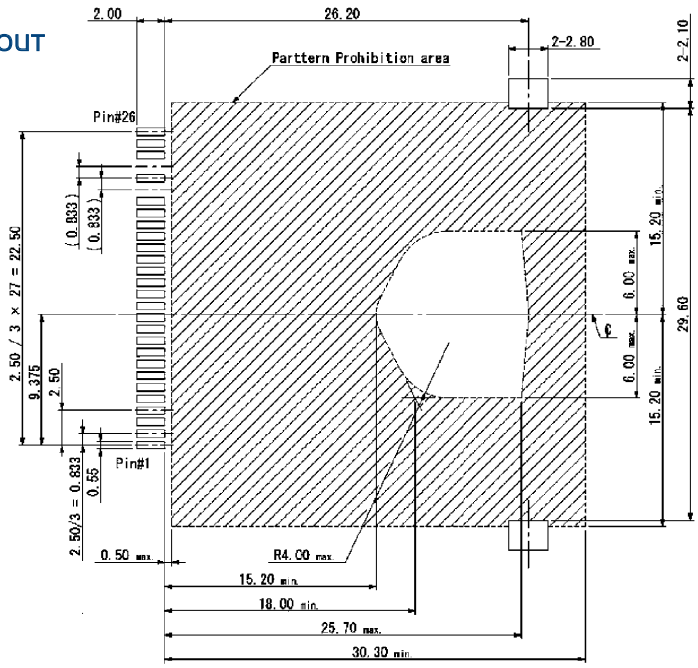

SPECIFICATIONS

Insulation Resistance:	1,000MΩ min.
Voltage Rating:	50V AC rms
Withstanding Voltage:	5V AC
Contact Resistance:	SD/MMC - 100mΩ max.
	Duo - 100mΩ max.
Current Rating:	0.5A max. per contact
Operating Temp. Range:	-20°C to +85°C
Mating Cycles:	10,000 insertions

PART NUMBER

FRS018 - 2100 - 0

Series No.

Design No.

MATERIALS AND FINISH

Insulator:	LCP
Contact :	Phoshor Bronze NI/AU/SN

FEATURES

- SD / MMC / HG Duo card reader push/push type
- Card detector switch

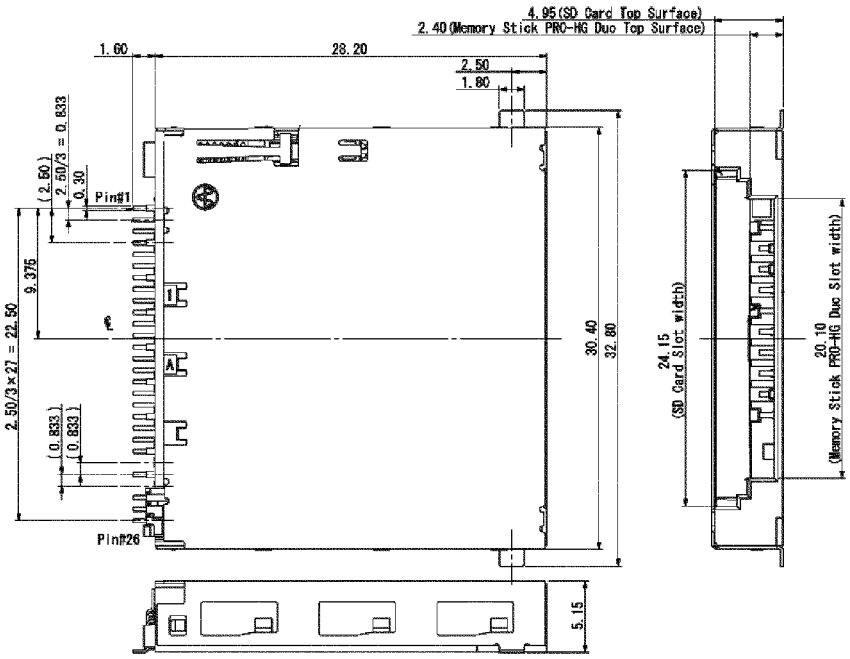

CARD INSERTION DETAILS

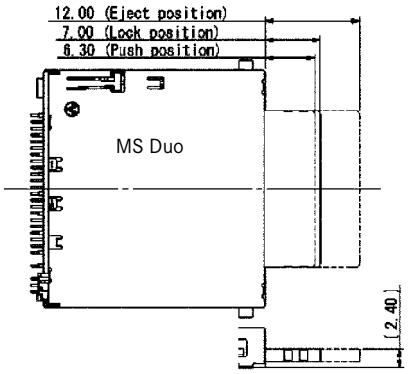

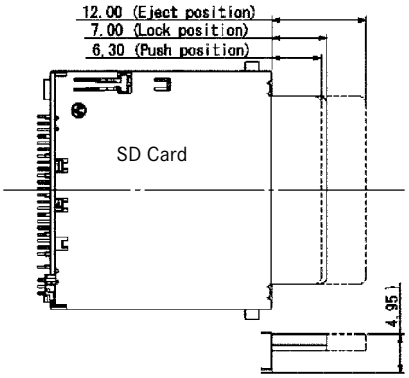

PCB LAYOUT

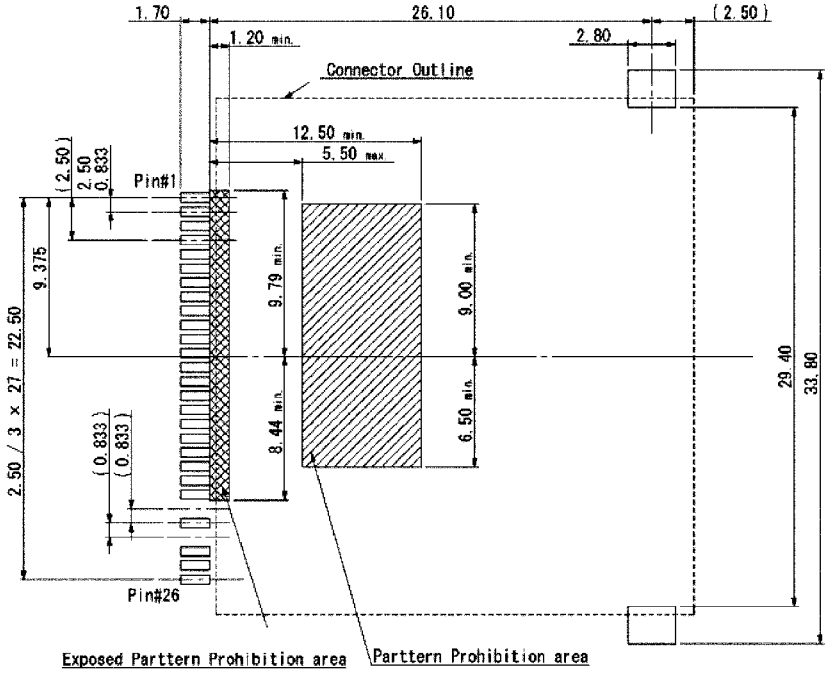

SPECIFICATIONS

Insulation Resistance:	1000MΩ at 500V DC
Withstanding Voltage:	500Vrms
Current Rating:	0.5A
Operating Temp. Range:	-20°C to +90°C
Reflow Solder Temp.:	220°C min./sec. 260°C peak
Mating Cycles:	10,000 times

MATERIALS AND FINISH

Insulator:	LCP, glass filled (UL94V-0)
SMT Metal:	Brass, pure Sn
Push Button:	Glass reinforced PBT (UL94V-0)
Cover:	Stainless Steel
Contacts:	Brass
Plating:	Contacts - Gold (15µ") over Nickel (40µ") Solder Tails - pure Sn

FEATURES

- Adapter for Compact Flash Card Type I
- With push button ejector (optional)

PART NUMBER

CF 050P - 003 - * * DS

- Series
- No. of Contacts
- 90° SMT
- Ejector: 0 = Without 1 = Right Side
- Insulator Colour: 0 = White (standard)
  1 = Black (on request only)
- Plating Area:
  Contacts: Gold (15µ") over 40µ" Nickel
  Solder Tails: 100µ" Tin over 40µ" Nickels

OUTLINE DIMENSIONS (WITHOUT EJECTOR)

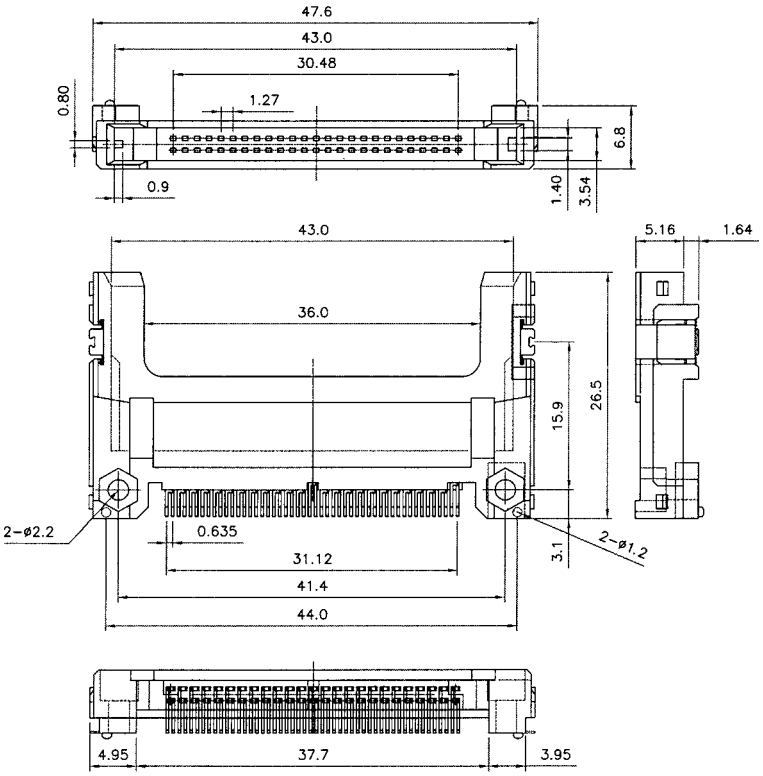

OUTLINE DIMENSIONS (EJECTOR OPTION)

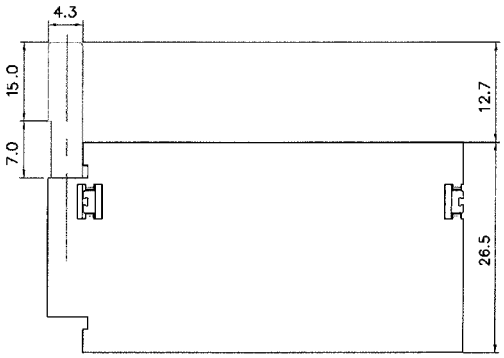

PIN POSITIONS

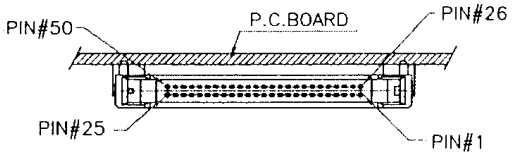

RECOMMENDED PCB LAYOUT AND MOUNTING AREA

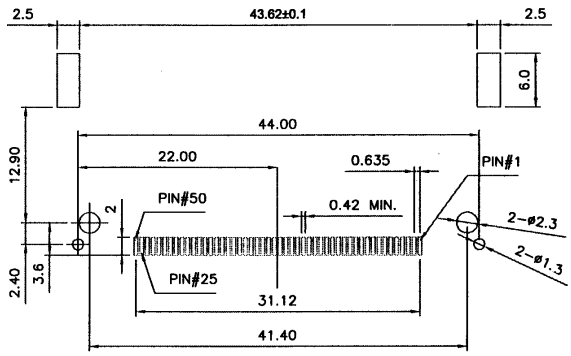

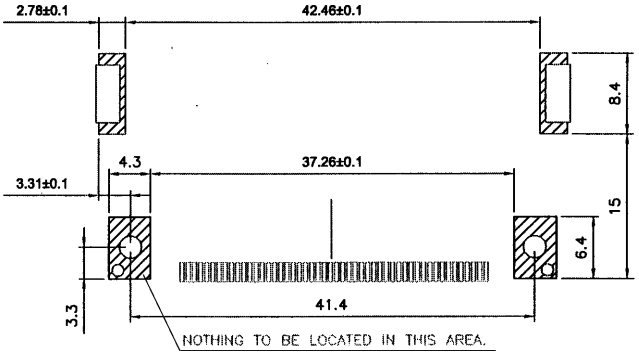

Trading Division

SPECIFICATIONS

Insulation Resistance:	1000MΩ at 500V DC
Withstanding Voltage:	500Vrms
Current Rating:	0.5A
Operating Temp. Range:	-55°C to +85°C
Reflow Solder Temp.:	220°C min. / 60 sec, 260°C peak
Mating Cycles:	10,000 times

MATERIALS AND FINISH

Insulator:	LCP, glass filled (UL94V-0)
SMT Metal:	Brass, pure Sn
Push Button:	Glass reinforced PBT (UL94V-0)
Cover:	Stainless Steal
Contacts:	Brass
Plating:	Contacts - Gold (15µ") over Nickel (40µ")
	Solder Tails - pure Sn

FEATURES

- Adapter for Compact Flash Card Type I and II
- With push button ejector (optional)

PART NUMBER

CF 050 P2 - * 0 3 - * 0 - DS 3

- Series
- No. of Contacts
- Stand-off Height: 0 = without 1 = 2.20mm
- 0 = Top Mounted on PCB
- 3 = 90° SMT
- Ejector: 0 = Without 1 = Right Side
- Plating Area:
  Contacts: Gold (15µ") over 40µ" Nickel
  Solder Tails: 100µ" Tin over 40µ" Nickel
- No Mark = Without Foil
  3 = Mylar Foil

OUTLINE DIMENSIONS (NO STAND-OFF)

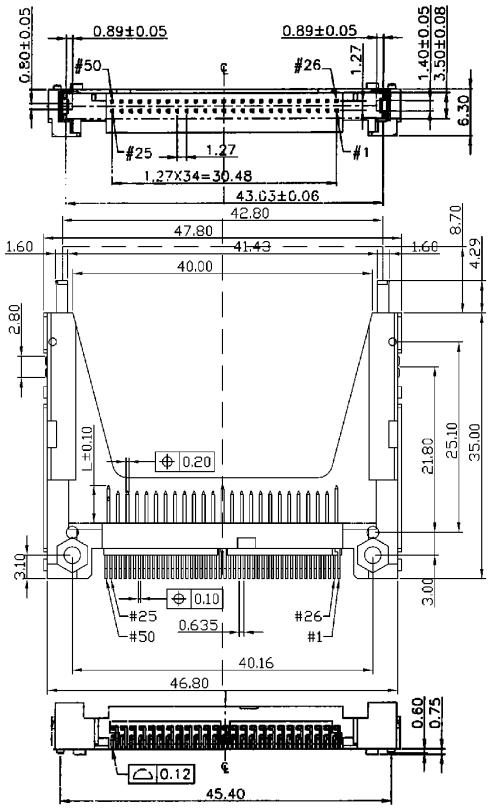

RECOMMENDED PCB LAYOUT

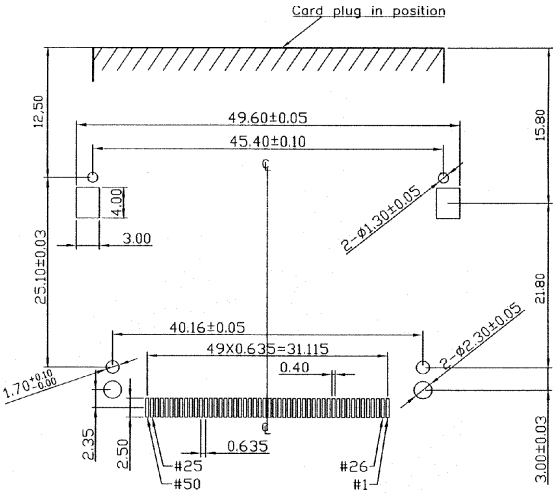

OUTLINE DIMENSIONS (EJECTOR OPTION)

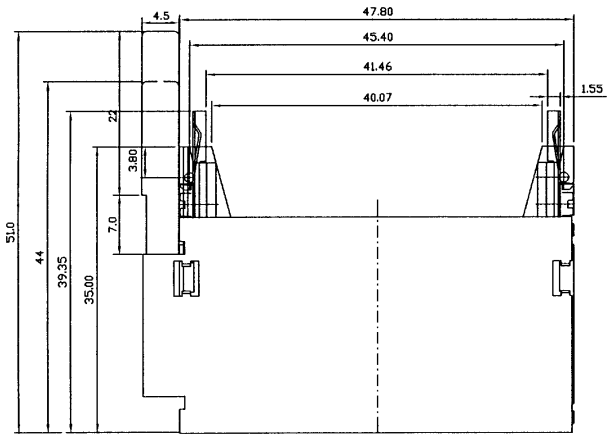

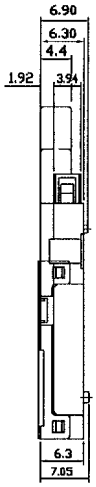

Interface Dim. L (Length)			
Power	=	5.00mm	Pin# 1, 13, 38, 50
General	=	4.25mm	all other pins
Detect	=	3.50mm	Pin# 25, 26

SPECIFICATIONS

Insulation Resistance:	1000MΩ at 500V DC
Withstanding Voltage:	500Vrms
Current Rating:	1A AC/DC max.
Contact Resistance:	40mΩ max. at 20mV max.
Operating Temp. Range:	-55°C to +85°C
Reflow Solder Temp.:	220°C min. / 60 sec, 260°C peak
Mating Cycles:	10,000 times

MATERIALS AND FINISH

Insulator:	LCP, glass filled (UL94V-0)
SMT Metal:	Brass, pure Sn
Push Button:	Glass reinforced PBT (UL94V-0)
Cover:	Stainless Steel
Contacts:	Brass
Plating:	Contacts - Gold (15μ") over Nickel (40μ")
	Solder Tails - pure Sn

FEATURES

- Adapter for Compact Flash Card type I and II
- Reversed type, for assembly underneath the PCB

PART NUMBER

CF 050 P2 - 0 1 3 - * 0 DS 3

- Series
- No. of Contacts
- Stand-off Height: 0 = without
- 1 = Botom Mounted on PCB
- 3 = 90° SMT
- Ejector: 0 = Without 1 = Right Side
- Plating Area:
  Contacts: Gold (15μ") over 40μ" Nickel
  Solder Tails: 100μ" Tin over 40μ" Nickel
- No Mark = Without Foil
  3 = Mylar Foil

OUTLINE DIMENSIONS

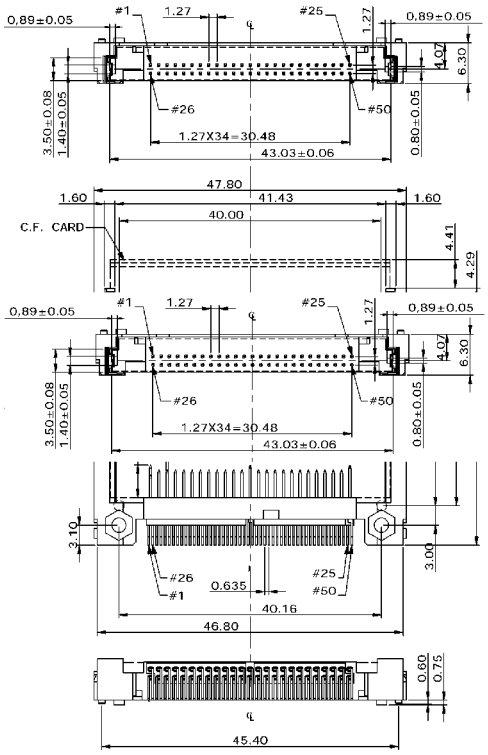

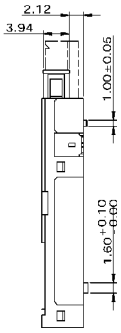

RECOMMENDED PCB LAYOUT

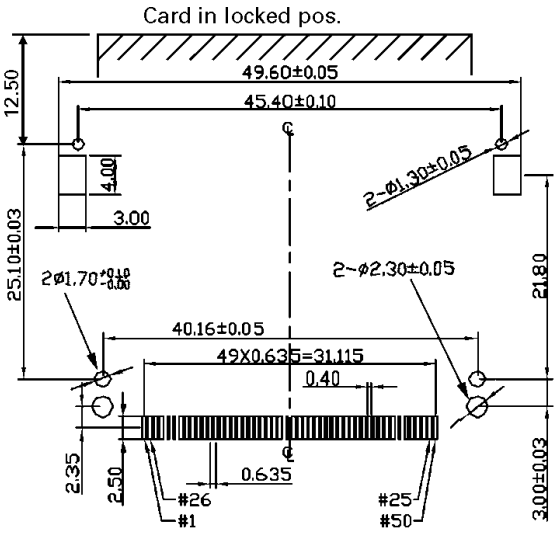

OUTLINE DIMENSIONS (EJECTOR OPTION)

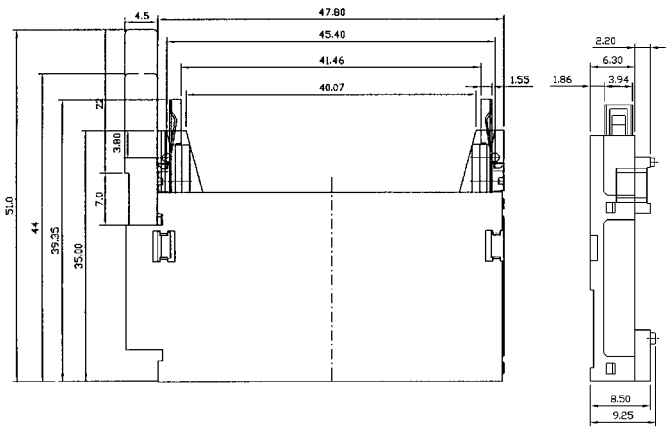

Interface Dim. L (Length)			
Power	=	5.00mm	Pin# 1, 13, 38, 50
General	=	4.25mm	all other pins
Detect	=	3.50mm	Pin# 25, 26

Trading Division

YAMAICHI ELECTRONICS

SERIES CF COMPACT FLASH CARD SLIM TYPE I (WITHOUT EJECTOR)

SPECIFICATIONS

Insulation Resistance:	1000MΩ at 500V DC
Withstanding Voltage:	500Vrms
Current Rating:	1A AC/DC max.
Contact Resistance:	40mΩ max. at 20mV max.
Operating Temp. Range:	-55°C to +85°C
Reflow Solder Temp.:	220°C min. / 60 sec., 260°C peak
Mating Cycles:	10,000 times

MATERIALS AND FINISH

Insulator:	LCP, glass filled (UL94V-0)
SMT Metal:	Brass, pure Sn
Contacts:	Brass
Plating:	Contacts - Gold (15µ") over Nickel (40µ")
	Solder Tails - pure Sn

FEATURES

- Adapter for Compact Flash Card type I and II
- Available for top and bottom PCB mounting
- Without cap for pick and place

PART NUMBER

CF 050 P1S - 0 0 3 - 0 0 DS *

- Series
- No. of Contacts
- Stand-off Height: 0 = without
- 0 = Top Mounted on PCB
- 3 = 90° SMT
- Ejector: 0 = Without
- Fixing Method: 0 = SMT Fixing
- Plating Area:
  Contacts: Gold 15µ" over 40µ" Nickel
  Solder Tails: 100µ" Tin over 40µ" Nickel
- Lock Option: 0 = Without 1 = Nut Mounted

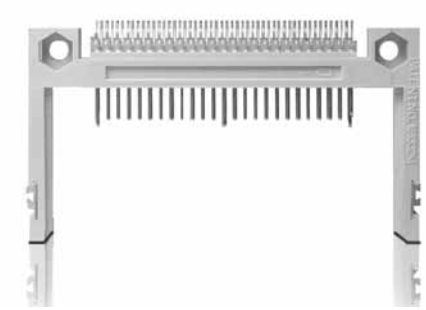

OUTLINE DIMENSIONS

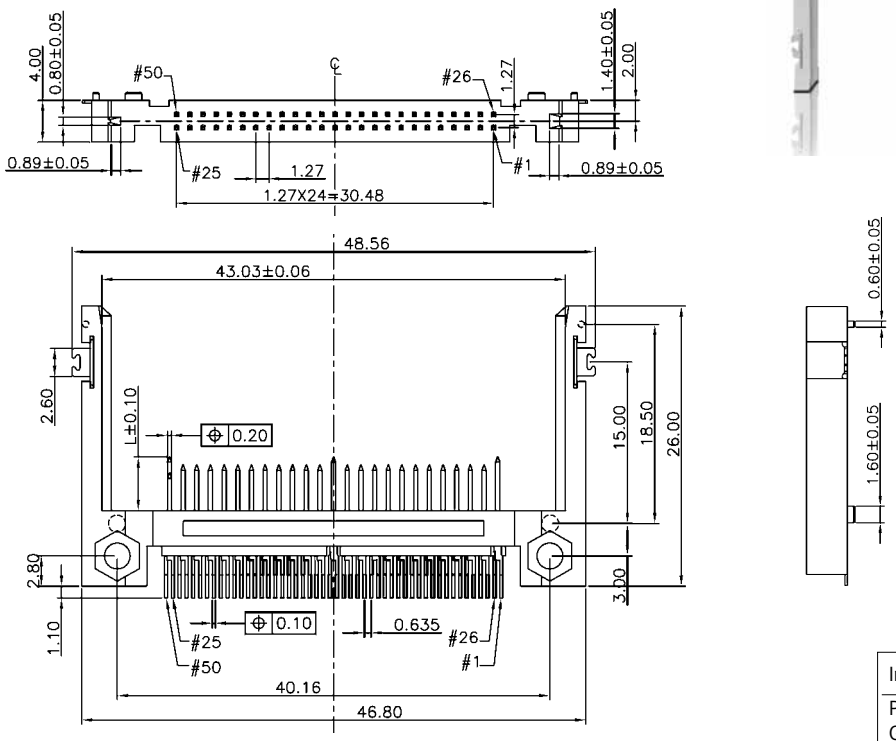

Interface Dim. L (Length)			
Power	=	5.00mm	Pin# 1, 13, 38, 50
General	=	4.25mm	all other pins
Detect	=	3.50mm	Pin# 25, 26

RECOMMENDED PCB LAYOUT

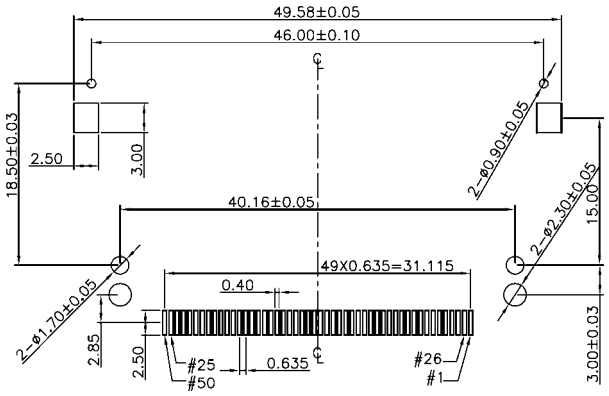

SPECIFICATIONS

Insulation Resistance:	1000MΩ at 500V DC
Withstanding Voltage:	500Vrms
Current Rating:	1A AC/DC max.
Contact Resistance:	40mΩ max. at 20mV max.
Operating Temp. Range:	-55°C to +85°C
Reflow Solder Temp.:	220°C min. / 60 sec., 260°C peak
Mating Cycles:	10,000 times

MATERIALS AND FINISH

Insulator:	LCP, glass filled (UL94V-0)
SMT Metal:	Brass, pure Sn
Contacts:	Brass
Plating:	Contacts - Gold (15µ") over Nickel (40µ")
	Solder Tails - pure Sn

FEATURES

- Adapter for Compact Flash Card Type I
- Available for top and bottom PCB mounting
- Without cap for pick and place

PART NUMBER

CF 050 P1S - 013 - 0 0 D5 *

- Series
- No. of Contacts
- Stand-off Height: 0 = without
- 1 = Bottom Reversed on PCB
- 3 = 90° SMT
- Ejector: 0 = Without
- Fixing Method: 0 = SMT Fixing
- Plating Area:
  Contacts: Gold 15µ" over 40µ" Nickel
  Solder Tails: 100µ" Tin over 40µ" Nickel
- Lock Option: 0 = Without 1 = Nut Mounted

OUTLINE DIMENSIONS

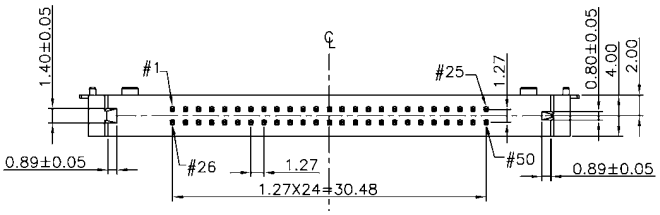

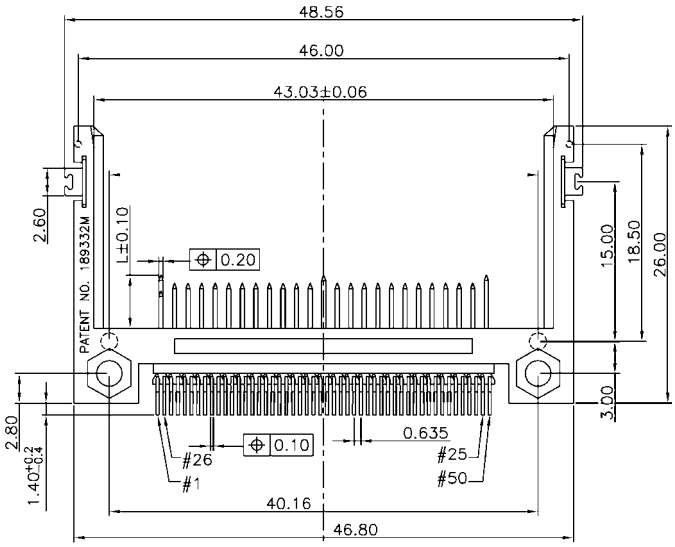

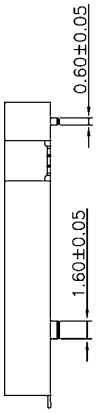

Interface Dim. L (Length)			
Power	=	5.00mm	Pin# 1, 13, 38, 50
General	=	4.25mm	all other pins
Detect	=	3.50mm	Pin# 25, 26

RECOMMENDED PCB LAYOUT

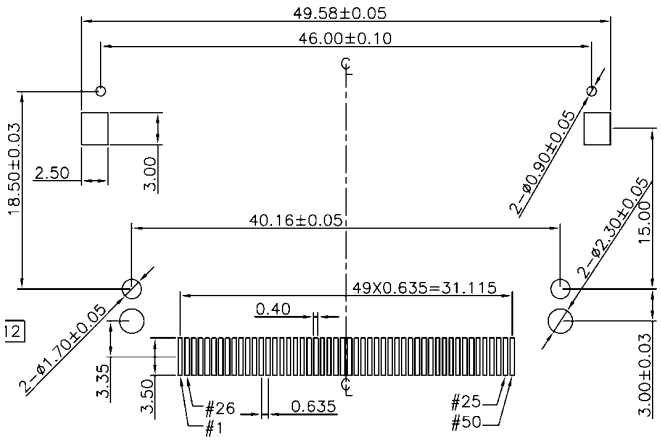

Trading Division

SPECIFICATIONS

Insulation Resistance:	1000MΩ at 500V DC
Withstanding Voltage:	500Vrms
Current Rating:	1A AC/DC max.
Contact Resistance:	40mΩ max. at 20mV max.
Operating Temp. Range:	-55°C to +85°C
Reflow Solder Temp.:	220°C min. / 60 sec, 260°C peak
Mating Cycles:	10,000 times

MATERIALS AND FINISH

Insulator:	LCP, glass filled (UL94V-0)
Push Button:	Glass reinforced PBT (UL94V-0)
SMT Metal:	Brass, pure Sn
Pivot Shell:	Stainless Steel
Contacts:	Brass
Plating:	Contacts - Gold (15µ") over Nickel (40µ")
	Solder Tails - pure Sn

FEATURES

- Adapter for Compact Flash Card type I and II
- Available with various ejectors and stand-offs

PART NUMBER

CF 050 P2S - *0 3 - * 0 D5 *

- Series
- No. of Contacts
- Stand-off Height 0 = Without 1 = 2.20mm
- PCB Mounting Type: 0 = Top
- 90° SMT
- Ejector: 0 = Without
  1 = Right Side (41.3mm)
  2 = Left Side (41.3mm)
  3 = Right Side (34.7mm)
  4 = Left Side (34.7mm)
- Fixing Method: 0 = SMT Fixing
- Plating Area:
  Contacts: Gold 15µ" over 40µ" Nickel
  Solder Tails: 100µ" Tin over 40µ" Nickel
- Lock Option: 0 = Without 1 = Nut Mounted

OUTLINE DIMENSIONS (NO STAND-OFF)

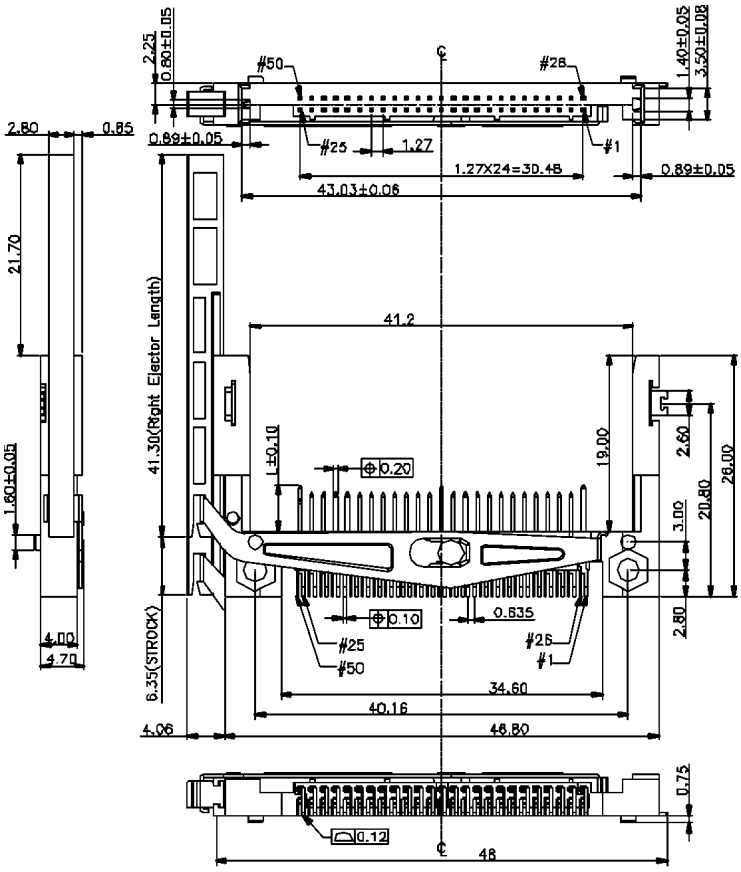

RECOMMENDED PCB LAYOUT

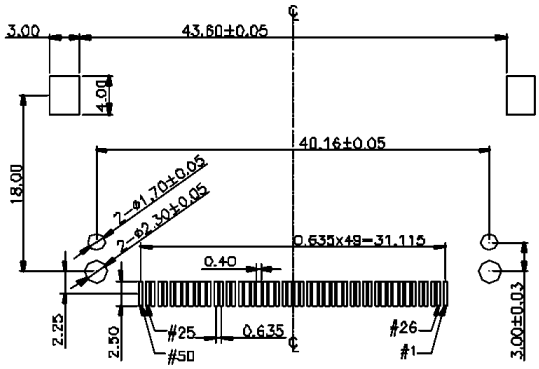

Interface Dim. L (Length)			
Power	=	5.00mm	Pin# 1, 13, 38, 50
General	=	4.25mm	all other pins
Detect	=	3.50mm	Pin# 25, 26

SPECIFICATIONS

Insulation Resistance:	1000MΩ at 500V DC
Withstanding Voltage:	500Vrms
Current Rating:	1A AC/DC max.
Contact Resistance:	40mΩ max. at 20mV max.
Operating Temp. Range:	-55°C to +85°C
Reflow Solder Temp.:	220°C min. / 60 sec, 260°C peak
Mating Cycles:	10,000 times

MATERIALS AND FINISH

Insulator:	LCP, glass filled (UL94V-0)
Push Button:	Glass reinforced PBT (UL94V-0)
SMT Metal:	Brass, pure Sn
Pivot Shell:	Stainless Steel
Contacts:	Brass
Plating:	Contacts - Gold (15µ") over Nickel (40µ") Solder Tails - pure Sn

FEATURES

- Reverse type without stand-off height is not applicable to Compact Flash Card Type II
- Adapter for Compact Flash Card type I and II
- Available with various ejectors

PART NUMBER

CF 050 P25 - * 1 3 - * 0 DS *

- Series
- No. of Contacts
- Stand-off Height 0 = Without 1 = 2.20mm
- PCB Mounting Type: 1 = Bottom Reverse
- 90° SMT
- Ejector: 0 = Without
  1 = Right Side (41.3mm)
  2 = Left Side (41.3mm)
  3 = Right Side (34.7mm)
  4 = Left Side (34.7mm)
- Fixing Method: 0 = SMT Fixing
- Plating Area:
  Contacts: Gold 15µ" over 40µ" Nickel
  Solder Tails: 100µ" Tin over 40µ" Nickel
- Lock Option: 0 = Without 1 = Nut Mounted

OUTLINE DIMENSIONS (STAND-OFF HEIGHT 2.20MM)

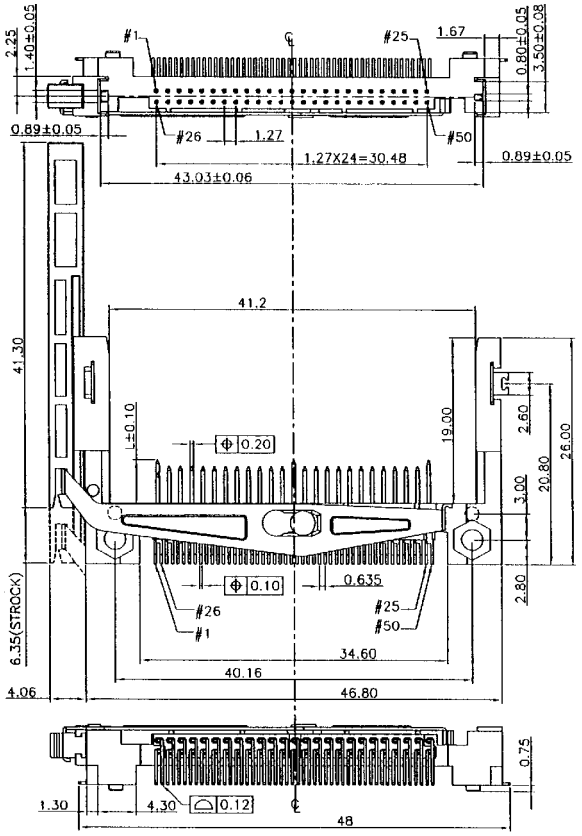

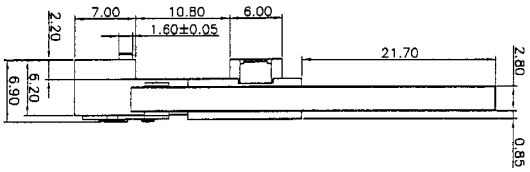

RECOMMENDED PCB LAYOUT

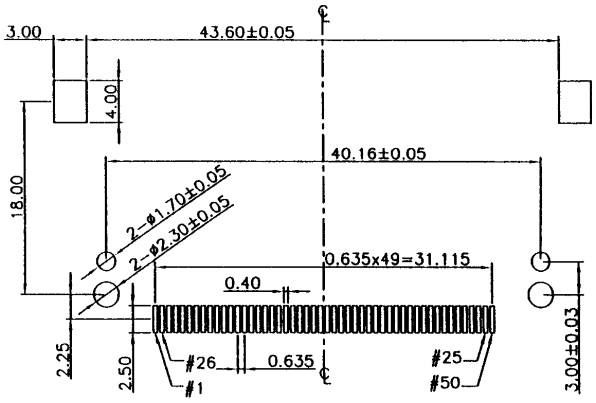

Interface Dim. L (Length)			
Power	=	5.00mm	Pin# 1, 13, 38, 50
General	=	4.25mm	all other pins
Detect	=	3.50mm	Pin# 25, 26

Trading Division

FEATURES

- Locking bow secure the Compact Flash card in the connector
- Locking bow must be used in combination with CF050P2-*03-00-DS connectors
- Locking bow is attached after the CF card is inserted into the connector

PART NUMBER

CF 050P2-LT REV3.0

Series

Design No.

OUTLINE DIMENSIONS

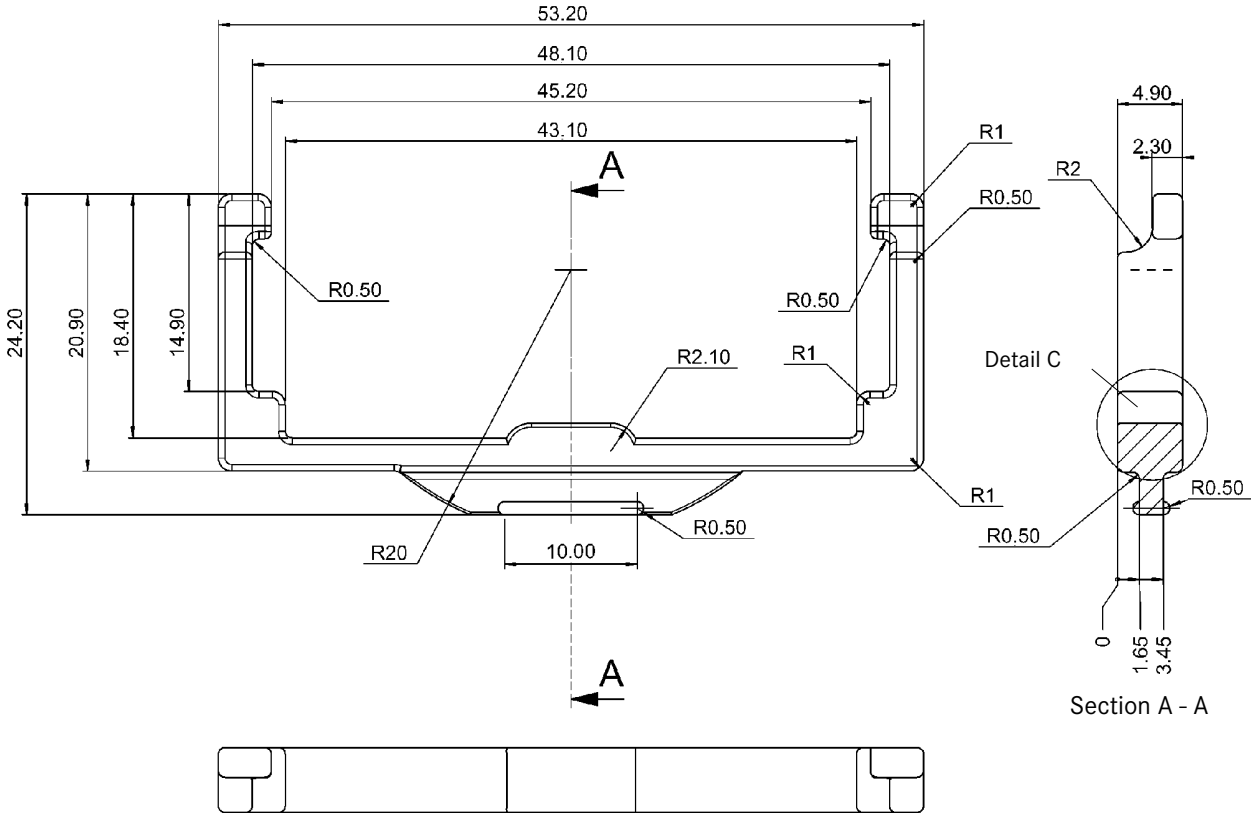

DETAIL C

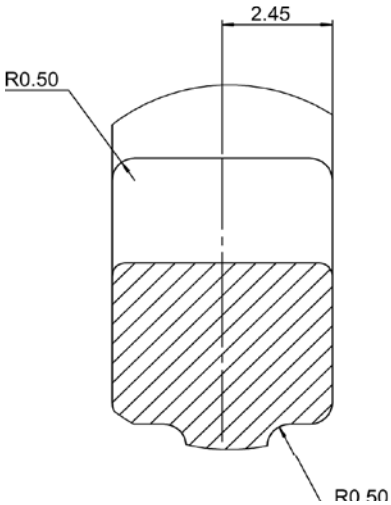

SPECIFICATIONS

Insulation Resistance:	1,000MΩ min.
Withstanding Voltage:	500V ACrms for 1 minute
Contact Resistance:	40mΩ max.
Current Rating:	0.5A per contact
Soldering Temp.:	265°C / 5 - 10 sec.

MATERIALS AND FINISH

Insulator:	PBT, glass filled (UL94V-0)
Contact:	Phosphor Bronze
Plating:	Contact Area - Au (0.3µm) over Nickel Solder Area - Au Flash
Plate:	Stainless Steel
Side Contact:	Phosphor Bronze Plating: Gold over Nickel

FEATURES

- Separable connector system, header and eject mechanism, makes assembly and rework easier
- Small, light and low profile connector meets all kinds of PC card system requirements
- Various product combinations single or double deck, right or left eject lever, polarization styles, various stand-off heights, fully supports the customer's design needs
- Convenience of PC card removal with push type eject lever

PART NUMBER

CNT - S T P - B L - 1 1 - A - 1

Series

S = Single Deck

PCB Mounting Style:
T = Top B = Bottom

Voltage Style:
S = 5V Card (on request)
P = 3.3V / 5V Card (standard)

A = Plastic Lever
B = Metal Lever
E = Without Ejector

Eject Lever: R = Right L = Left

Height of Stand-off: (in mm)
1 = 0 4 = 2.2 8 = 5.0 9 = 5.5

Nut Insert:
0 = None (on request)
1 = Header (on request)
2 = Guide (on request)
3 = Header / Guide (standard)

Shield Plate:
A = None
B = Top
C = Bottom
D = Top and Bottom

Kapton Film:
no mark = None
1 = Top
2 = Bottom
3 = Top and Bottom

EXAMPLE: SINGLE DECK THROUGH HOLE FIXING (3.3V / 5V AND 5V) WITHOUT STAND-OFF

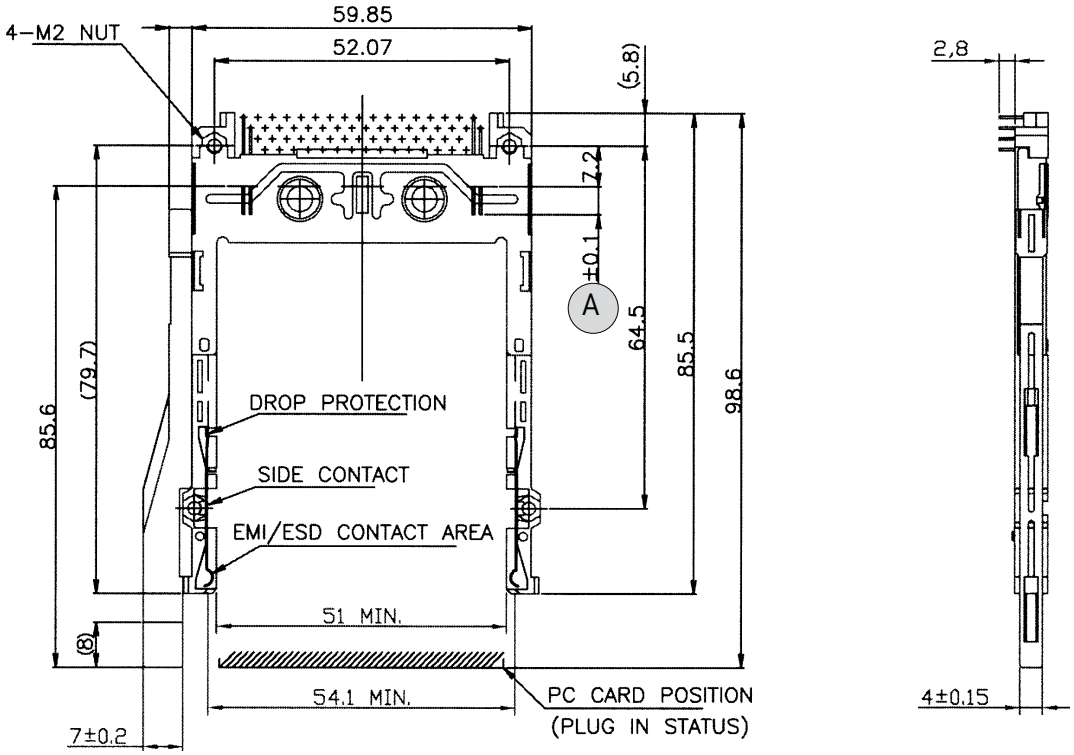

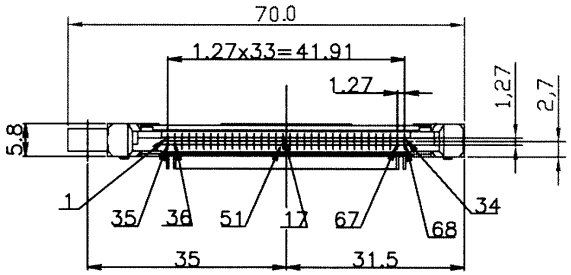

Contact Dimensions at (A)		Length
Contacts	A1, A17, A34, A35, A51 and A68	5.00 ±0.1
Contacts	A36 and A67	3.50 ±0.1
All other contacts		4.25 ±0.1

EXAMPLE PCB LAYOUT

With Stand-off

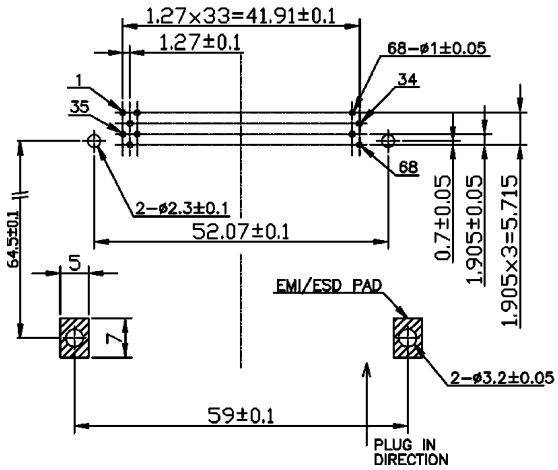

Without Stand-off

Top View

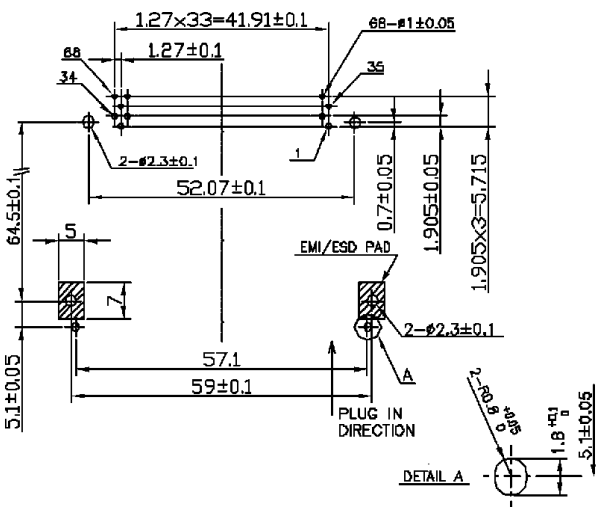

SPECIFICATIONS

Insulation Resistance:	1,000MΩ min.
Withstanding Voltage:	500V ACrms for 1 minute
Contact Resistance:	40mΩ max.
Current Rating:	0.5A per contact
Soldering Temp.:	265°C / 5 - 10 sec.

MATERIALS AND FINISH

Insulator:	PBT, glass filled (UL94V-0)
Contact:	Phosphor Bronze
Plating:	Contact Area - Au (0.3µm) over Nickel Solder Area - Au Flash
Plate:	Stainless Steel
Side Contact:	Phosphor Bronze Plating: Gold over Nickel

FEATURES

- Separable connector system, header and eject mechanism, makes assembly and rework easier
- Small, light and low profile connector meets all kinds of PC card system requirements
- Various product combinations single or double deck, right or left eject lever, polarization styles, various stand-off heights, fully supports the customer's design needs
- Convenience of PC card removal with push type eject lever

PART NUMBER

CNT - D T P - B RL - 9 3 - A - 1

Series

D = Double Deck

PCB Mounting Style:
T = Top B = Bottom

Voltage Style:
S = 5V Card (on request)
P = 3.3V / 5V Card (standard)

A = Plastic Lever
B = Metal Lever
E = Without Ejector

Eject Lever Positions:
RR = Top Right / Bottom Right
RL = Top Right / Bottom Left
LL = Top Left / Bottom Left
LR = Top Left / Bottom Right

Height of Stand-off: (in mm)
4 = 2.2 8 = 5.0 9 = 5.5

Nut Insert:
0 = None (on request)
1 = Header (on request)
2 = Guide (on request)
3 = Header / Guide (standard)

Shield Plate:
A = None
B = Top
C = Bottom
D = Top / Bottom

Kapton Film:
no mark = None
1 = Top
2 = Bottom
3 = Top and Bottom

Trading Division

EXAMPLE DOUBLE DECK THROUGH HOLE FIXING (3.3V / 5V AND 5V) WITH 5.5MM STAND-OFF

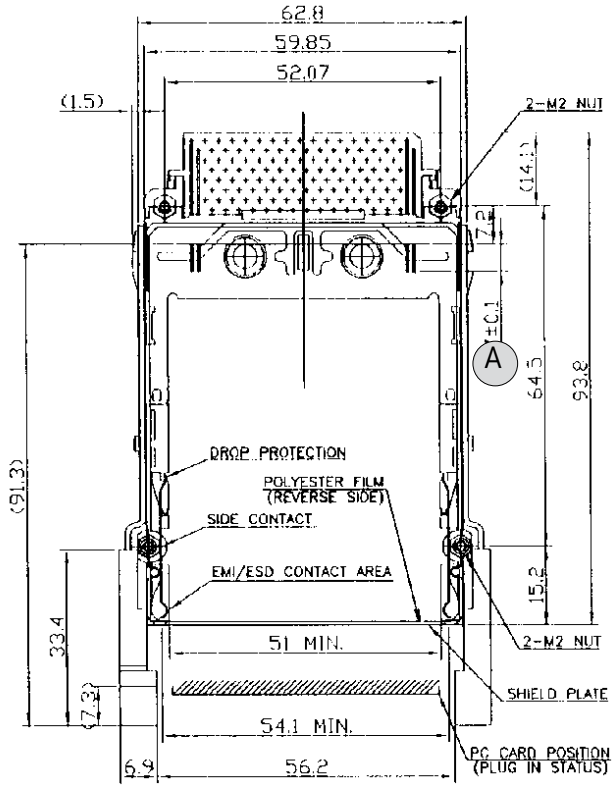

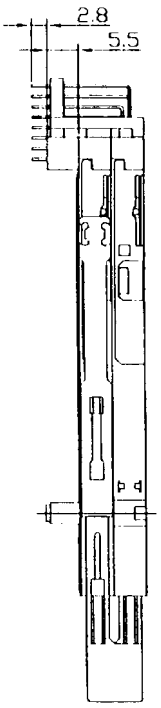

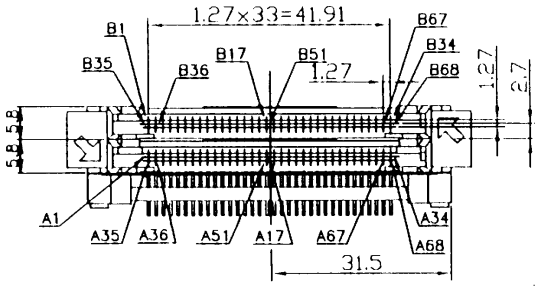

Contact Dimensions at (A)		Length
Contacts	A1, A17, A34, A35, A51 and A68	5.00 ±0.1
Contacts	A36 and A67	3.50 ±0.1
All other contacts		4.25 ±0.1

EXAMPLE PCB LAYOUT

With Stand-off

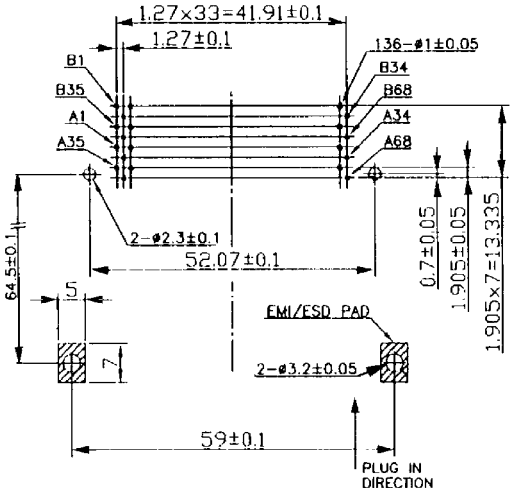

Without Stand-off

Top View

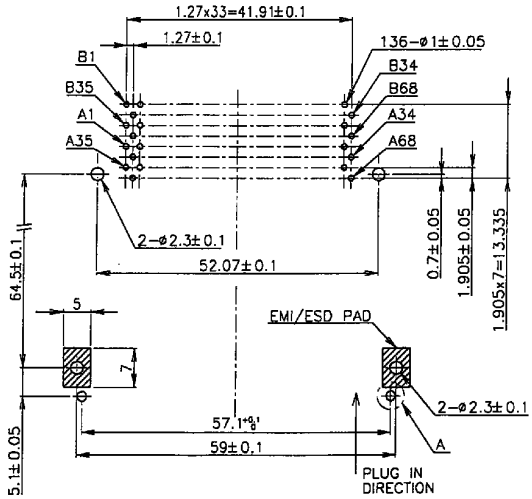

Detail A

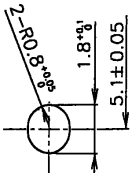

SPECIFICATIONS

Insulation Resistance:	1,000MΩ min.
Withstanding Voltage:	500V ACrms for 1 minute
Contact Resistance:	40mΩ max.
Current Rating:	0.5A per contact
Soldering Temp.:	Rear socket: 220°C /40 sec., 240°C peak
Operating Temp. Range:	-20°C to +60°C

MATERIALS AND FINISH

Insulator:	PBT, glass filled (UL94V-0)
Contact:	Phosphor Bronze
Plating:-	Header:
	Card side - Au 0.3μm over Ni 2.0μm
	Rear side - Au flash over Ni 2.0μm
	Rear Socket:
	Mating side - Au 0.2μm over Ni 1.0μm
	Solder side - Au flash over Ni 1.0μm
Plate:	Stainless Steel
Side Contact:	Phosphor Bronze
Plating:	Au over Ni

FEATURES

- SMT connector makes assembly and rework easier
- Small, light and low profile connector meets all kinds of PC card system requirements
- Various product combinations single or double deck, right or left eject lever, polarization styles, various stand-off heights, fully supports the customer's design needs
- Convenience of PC card removal with push type eject lever

PART NUMBER

CNS - S T P - A R - 8 3 - A - 1

Series

S = Single Deck

PCB Mounting Style:
T = Top B = Bottom

Voltage Style:
P = 3.3V / 5V Card

A = Plastic Lever
B = Metal Lever
E = Without Ejector

Eject Lever:
R = Right L = Left

*Height of Stand-off:
4 = 2.2mm 8 = 5.0mm

Nut Insert:
0 = None (on request)
1 = Header (on request)
2 = Guide (on request)
3 = Header / Guide (standard)

Shield Plate:
A = None
B = Top
C = Bottom
D = Top / Bottom

Kapton Film:
no mark = None
1 = Top
2 = Bottom
3 = Top and Bottom

*Stand-off products 0.0 and 2.2mm are subject to a minimum order quantity of 1,120 pcs.

PART NUMBER FOR REAR SOCKET

PCMCIA - 1260 - *

Packing Number

Available Types
0 = Without Kapton Film (Tray)
1 = With Kapton Film (Tray)
9 = With Kapton Film
(Tape & Reel, 1,500 pcs. per reel)

Trading Division

EXAMPLE: SINGLE DECK SMT FIXING WITH 5.0MM STAND-OFF

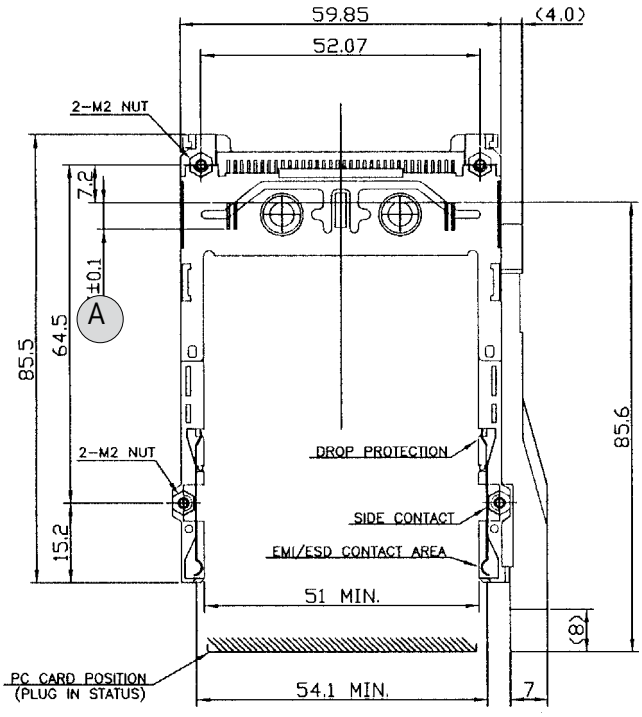

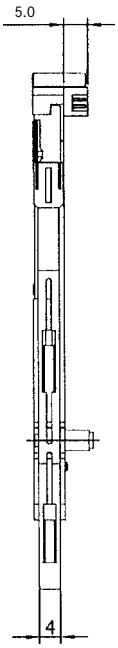

Rear Socket

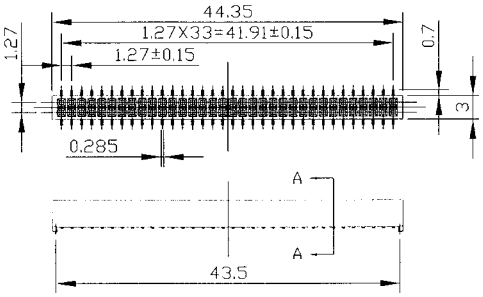

REAR SOCKET SECTION DETAILS

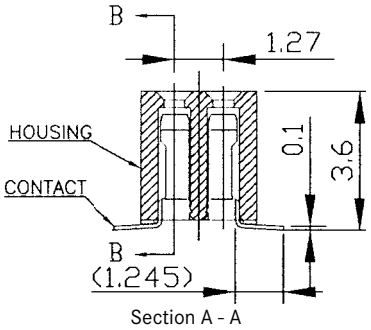

Section A - A

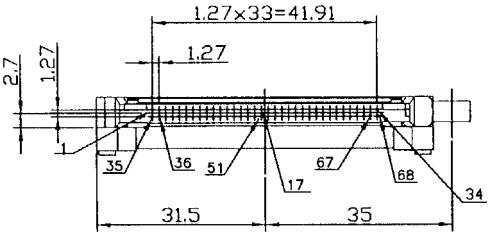

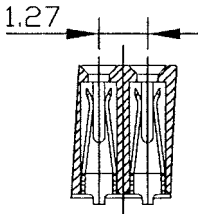

Section B - B

Contact Dimensions at (A)		Length
Contacts	A1, A17, A34, A35, A51 and A68	5.00 ±0.1
Contacts	A36 and A67	3.50 ±0.1
All other contacts		4.25 ±0.1

EXAMPLE PCB LAYOUT

With Stand-off

Without Stand-off

Top View

Please Note: this hole for stand-off 2.2mm and 5.0mm lies on the center line with the SMD pad

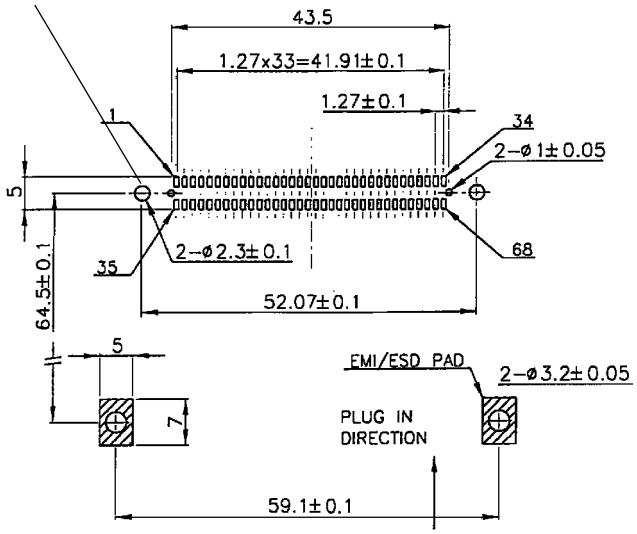

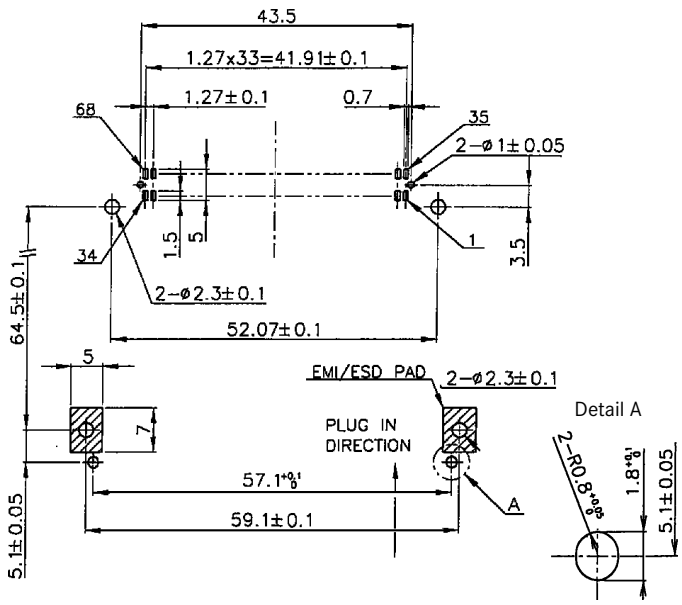

SPECIFICATIONS

Insulation Resistance:	1,000MΩ min.
Withstanding Voltage:	500V ACrms for 1 minute
Contact Resistance:	40mΩ max.
Current Rating:	0.5A per contact
Soldering Temp.:	Rear socket: 220°C /40 sec., 240°C peak
Operating Temp. Range:	-20°C to +60°C

MATERIALS AND FINISH

Insulator:	PBT, glass filled (UL94V-0)
Contact:	Phosphor Bronze
Plating:-	Header:
	Card side - Au 0.3μm over Ni 2.0μm
	Rear side - Au flash over Ni 2.0μm
	Rear Socket:
	Mating side - Au 0.2μm over Ni 1.0μm
	Solder side - Au flash over Ni 1.0μm
Plate:	Stainless Steel
Side Contact:	Phosphor Bronze
Plating:	Au over Ni

FEATURES

- SMT connector makes assembly and rework easier
- Small, light and low profile connector meets all kinds of PC card system requirements
- Various product combinations single or double deck, right or left eject lever, polarization styles, various stand-off heights, fully supports the customer's design needs
- Convenience of PC card removal with push type eject level

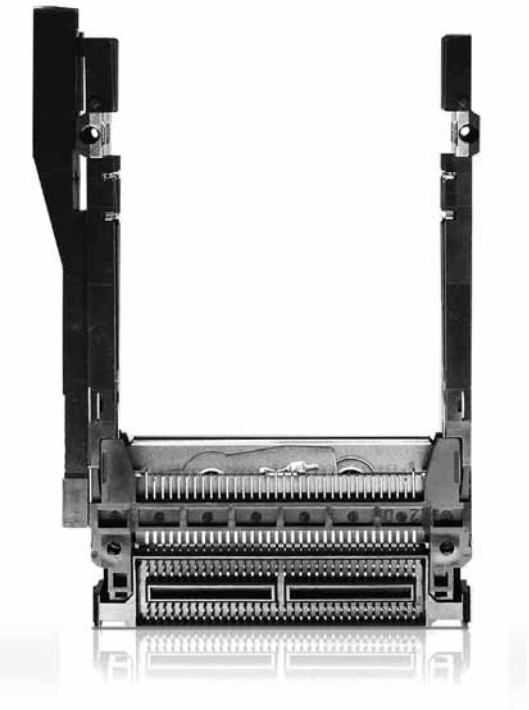

PART NUMBER

CNS - D T P - A RR - 1 3 - A - 1

- Series
- D = Double Deck
- PCB Mounting Style: T = Top B = Bottom
- Voltage Style: P = 3.3V / 5V Card
- A = Plastic Lever; B = Metal Lever; E = Without Ejector
- Eject Lever Positions: RR = Top Right / Bottom Right; RL = Top Right / Bottom Left; LL = Top Left / Bottom Left; LR = Top Left / Bottom Right
- *Height of Stand-off: 1 = 0mm 4 = 2.2mm 8 = 5.0mm
- Nut Insert: 0 = None (on request); 1 = Header (on request); 2 = Guide (on request); 3 = Header / Guide (standard)
- Shield Plate: A = None; B = Top; C = Bottom; D = Top / Bottom
- Kapton Film: no mark = None; 1 = Top; 2 = Bottom; 3 = Top and Bottom

*Stand-off products 0.0 and 2.2mm are subject to a minimum order quantity of 1,120 pcs.

PART NUMBER FOR REAR SOCKET

PCMCIA - 1088 - *

- Packing Number
- Available Types: 1 = With Kapton Film (Tray); 9 = With Kapton Film (Tape & Reel)

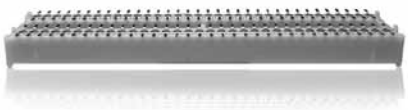

Trading Division

EXAMPLE: DOUBLE DECK SMT FIXING WITH 2.2MM STAND-OFF

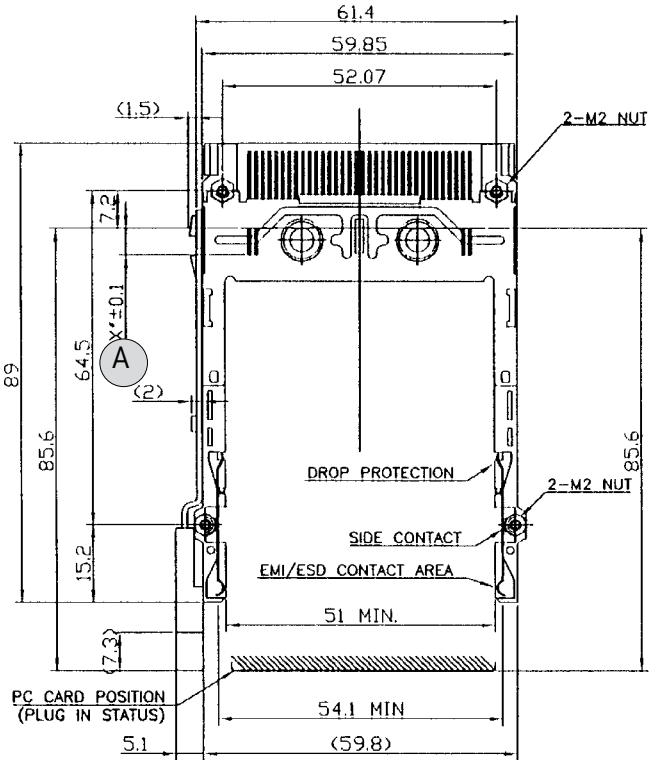

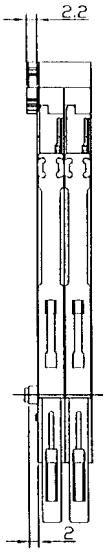

Rear Socket Section Details

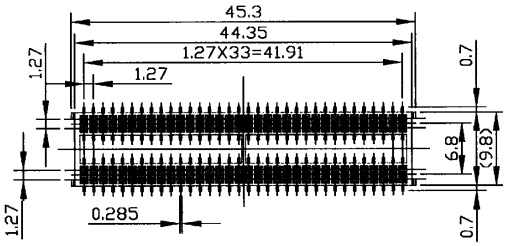

Section A - A

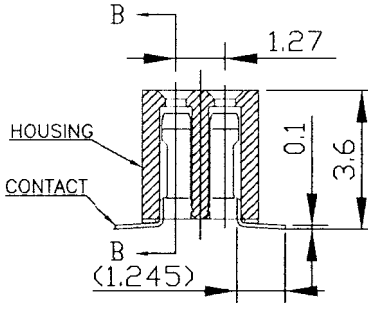

Section B - B

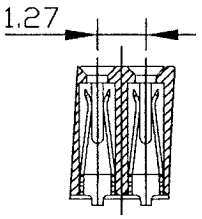

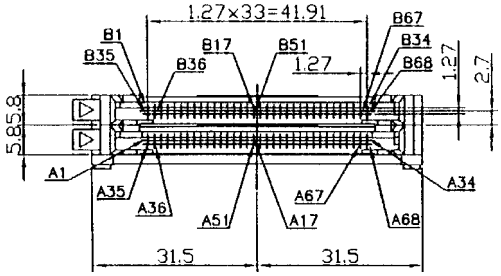

Contact Dimensions at (A)		Length
Contacts	A1, A17, A34, A35, A51 and A68 B1, B17, B34, B35, B51 and D68	5.00 ±0.1
Contacts	A36 and A67, B36 and B67	3.50 ±0.1
All other contacts		4.25 ±0.1

EXAMPLE PCB LAYOUT

With Stand-off

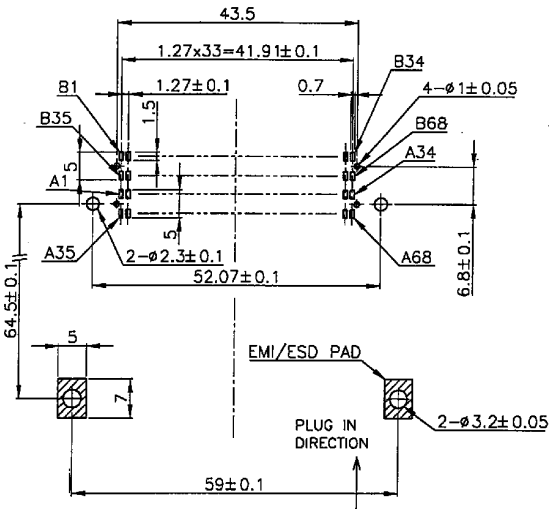

Without Stand-off

Top View

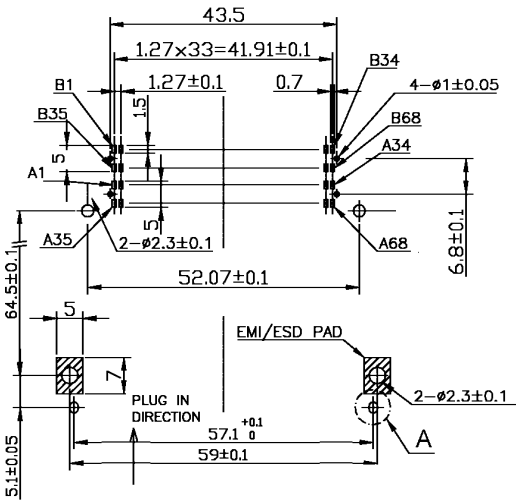

Detail A

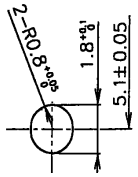

HIGH SPEED CONNECTORS

ADVANCEDCMT 77
COMPRESSION MOUNT TECHNOLOGY INTRODUCTION

ADVANCEDTCA AND MICROTCA 78
TECHNOLOGY INTRODUCTION

ADVANCEDMC CONNECTORS FOR ADVANCEDTCA 79
SERIES CN074

ADVANCEDMC CONNECTORS FOR MICROTCA 85
SERIES CN080

MICROTCA CARRIER HUB 87
SERIES CN084

POWER CONNECTOR FOR MICROTCA 88
SERIES CNU009

POWER CONNECTOR FOR ADVANCEDTCA 89
SERIES CNU004

HIGH SPEED CONNECTOR SYSTEM 90
SERIES HF507 INTRODUCTION

NON-ZIF 180° AND 90° HIGH SPEED CONNECTORS 91
SERIES HF507S CONNECTOR AND CABLE SYSTEM

YFLEX CABLE 94
SERIES YFB

NON-ZIF ADAPTER PLUG FOR DISCRETE WIRE 95
SERIES HF507P

SHIELDED HIGH SPEED CABLE FOR FFC 96
SERIES YFT

ZIF CONNECTOR FLIP TYPE 98
SERIES HF601 AND FFC CABLE

HIGH SPEED CONNECTOR FLIP TYPE 102
SERIES HF509

MINIATURE CONNECTORS / CABLE SOCKETS FOR COXIAL CONNECTORS 103
SERIES HF201P, HF201S

CFP MECHANICAL UNIT CONNECTOR FOR TELECOM/DATACOM 105
SERIES CA009

QFSP FOR TELECOM/DATACOM 106
SERIES CN120

CMT = COMPRESSION MOUNT TECHNOLOGY

AdvancedCMT is the quality trademark of Yamaichi Electronics for connectors used in Advanced TCA® and MicroTCA®

- CMT is a contact technology between an electro-mechanical component (e.g. connector or test adapter for semi-conductors) and a printed circuit board.
- The electrical contact is established through the compression of the two contact faces by screwing the component to the PCB.
- A stiffener is screwed from the backside to avoid stress on the PCB.
- Easy field repair and component replacement is possible.

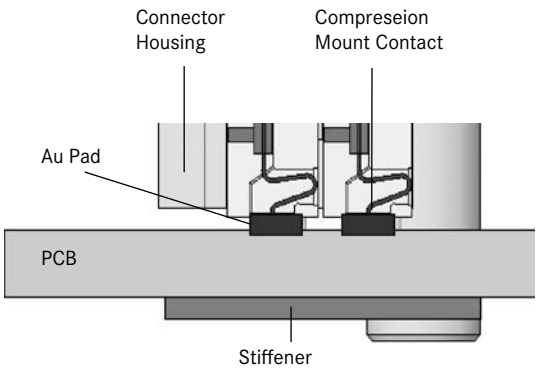

SPEED

CMT allows the usage of blind via's, micro via's or drillings with a very small diameter thus

- reducing stub-effects and reflexion
- reducing cross-talk and insertion loss
- providing characteristic impedance matching
- enabling transmission waveform @12.5 Gbps (see diagram pg. 71)

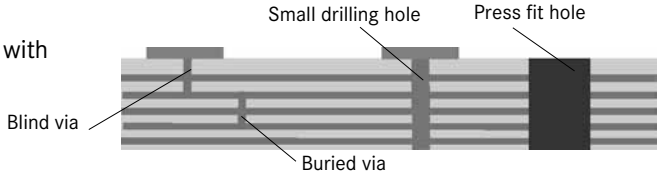

Cross-section showing PCB holesrequired for press-fit connections compared to small drilling holes or vias for CMT

FLEXIBILITY

The usage of blind via's, micro via's or drillings with very small diameter also provides

- more space for signal routing on the backplane
- possibilities to reduce the number of backplane layers up to30%
- cost saving due to less backplane layers

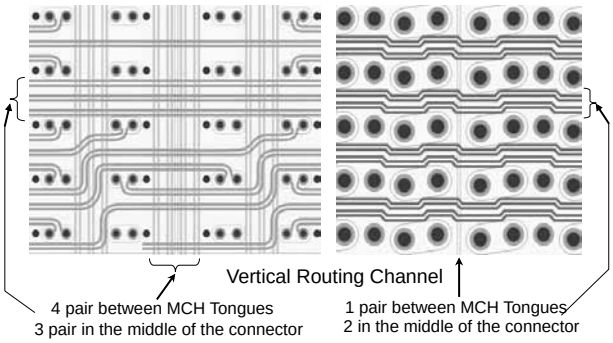

RELIABILITY

AdvancedCMT connectors from Yamaichi have proven their reliability under vibration, temperature etc. according to all relevant specifications or both the CMT and the card edge connection area

Yamaichi is using wider contacts to compensate manufacturing tolerances of the PCB

- No additional "guiding" needed -

Yamaichi contact shape has the contact point at the bending area (not at the stamping / cutting area)

- No damage of the contact surface while mating -
- Stable contact resistance during the lifetime -
- Precisely defined contact force -

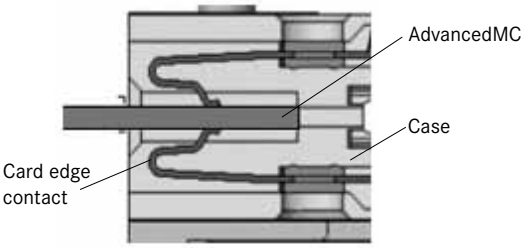

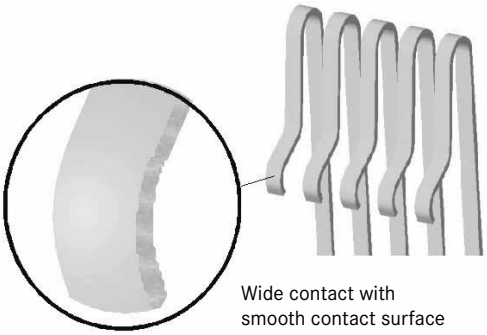

WHAT IS ADVANCEDTCA AND MICROTCA USED FOR:

Next generation telecom equipment - routers, switches, security devices, access devices, signaling systems, basestations, carrier Ethernet, and telephony systems.

Applications outside telecom such as enterprise networks, storage, instrumentation, computers and peripherals, test equipment, military and defense systems, industrial control, process control, broadcasting, and medical equipment.

PICMG (PCI Industrial Computers Manufactures Group)

PICMG is a U.S.-based consortium where more than 600 companies collaboratively develop open specifications for high performance telecom and industrial computing applications such as AdvancedTCA and MicroTCA.

ADVANCEDTCA (Advanced Telecom Computing Architecture)

AdvancedTCA is a series of specifications to support the latest requirements of high end ommunications equipment. AdvancedTCA systems provide core applications with high reliability, availability and serviceability. The AdvancedTCA shelf accepts up to 14 AdvancedTCA carrier boards (blades)

MICROTCA (Micro Telecom Computing Architecture)

MicroTCA is a series of specifications to incorporate the key elements of AdvancedTCA or physically smaller edge applications that AdvancedTCA may not apply. Furthermore the MicroTCA system provides increased functionality which can fulfill the requirements of next-generation equipment for Industrial, Medical and MIL/Aerospace applications. For the management of a MicroTCA system a MicroTCA Carrier Hub (MCH) is used.

ADVANCEDMC (Advanced Mezzanine Card)

AdvancedMCs are the primary component of AdvancedTCA and MicroTCA systems. Standardized AdvancedMCs provide the system with functional elements such as connectivity, processors and mass-storage.

- Each AdvancedTCA carrier board accepts up to 8 AdvancedMCs.
- A typical MicroTCA system consists of up to 12 AdvancedMCs.

IMPORTANT FEATURES

- Serial bus system
- Scalable bandwidth @ 1-12+ Gbps
- Scalable system
- Reliability
- Hot-swap support
- Modular and small size form factor

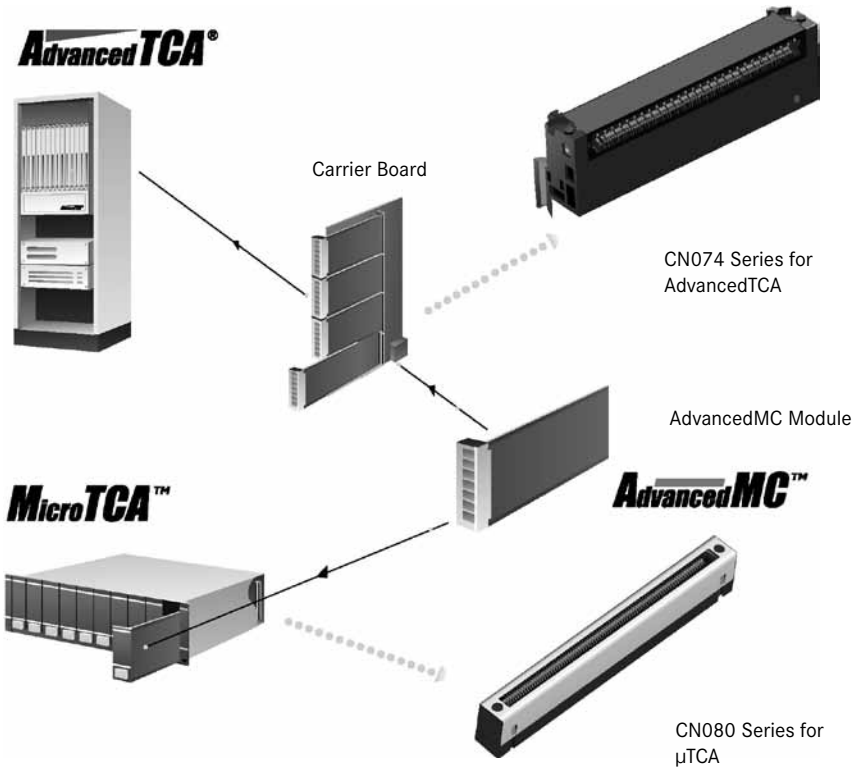

SUPPORT 12.5GBPS TRANSMISSION FOR TELECOM APPLICATIONS

CN074 supports data transfer between AdvancedMC and AvancedTCA Carrier Board (blade) at 12.5Gbps and beyond, optimizing the performance of the AdvancedTCA system. CN074 is PICMG AMC.0 compliant.

BEHIND THE HIGH-SPEED CONNECTIVITY: „CMT" AND „YFLEX"

The unprecedented high-speed connectivity is achieved by combining our unique connector-mounting technology, CMT and our patented flexible circuit board, YFLEX. The combination of CMT and YFLEX ideally reduces insertion loss and cross talk to the absolute minimum, ensuring data transfer rates of 12.5Gbps and beyond without signal loss.

COVERS FULL RANGE OF ADVANCEMCS BUT ALSO ALLOWS CUSTOMIZATION

CN074 not only covers the full range of standard AdvancedMCs but also allows for design modifications e.g. special pin configuration to meet your specific needs

CN074-085-0003 (Type B)

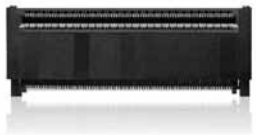

CN074-170-0005 (Type B+)

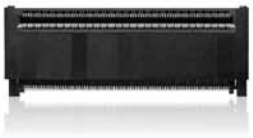

CN074-170-0006 (Type AB)

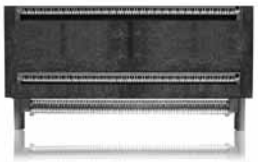

CN074-340-0001 (Type A+B+)

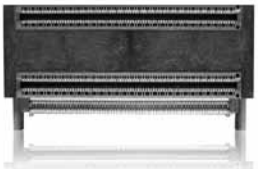

CN074-340-0003 (Type A+B+ mid size)

YFLEX

- YFLEX is Yamaichi Electronics LCP-based flexible circuit board. In the Connectors,
- YFLEX is used as a cable that ensures high-speed data transmission with minimal signal loss.

YFLEX
LCP-based flexible circuit board

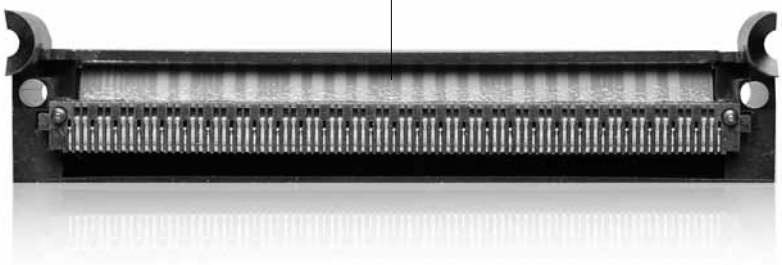

SPECIFICATIONS

Insulation Resistance:	100MΩ min. at 80V DC	
Withstanding Voltage:	80Vrms	
Differential Impedance:	100Ω ±10Ω	
Line Resistance:	Differential pair conductors	= 375mΩ
	General purpose conductors	= 90mΩ
	Power conductors	= 90mΩ
	Ground conductors	= 60mΩ
Attenuation:	<1dB at 8GHz and <2dB at 12GHz	
Return Loss:	<20dB at 5GHz and <13dB at 8GHz	
Cross Talk Ratio:	NE and FE <2%	
Operating Temp. Range:	−55°C to +105°C	
Mating Cycles:	200 times	

PART NUMBER

CN074 - 085 - 0003

- *Series No.
- Number of Contacts
- Design No.

*INFO: including screws and stiffener

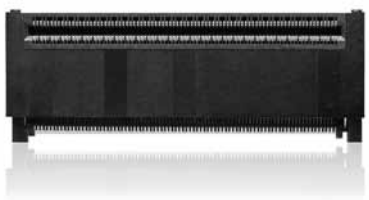

MATERIALS

Case:	PA9T (UL94V-0), black
Housing:	LCP (UL94V-0), black
Contact:	Copper Alloy, Gold plating over Nickel
YFLEX:	LCP/Copper, Gold plating over Nickel
Screw:	Stainless
Stiffener:	Stainless, PA9T (UL94V-0), black

FEATURES

Connector Type:	Basic
Carrier Board:	Conventional
Contacts:	85
Module Slots:	1

OUTLINE CONNECTOR DIMENSIONS CN074-085-0003 (TYPE B)

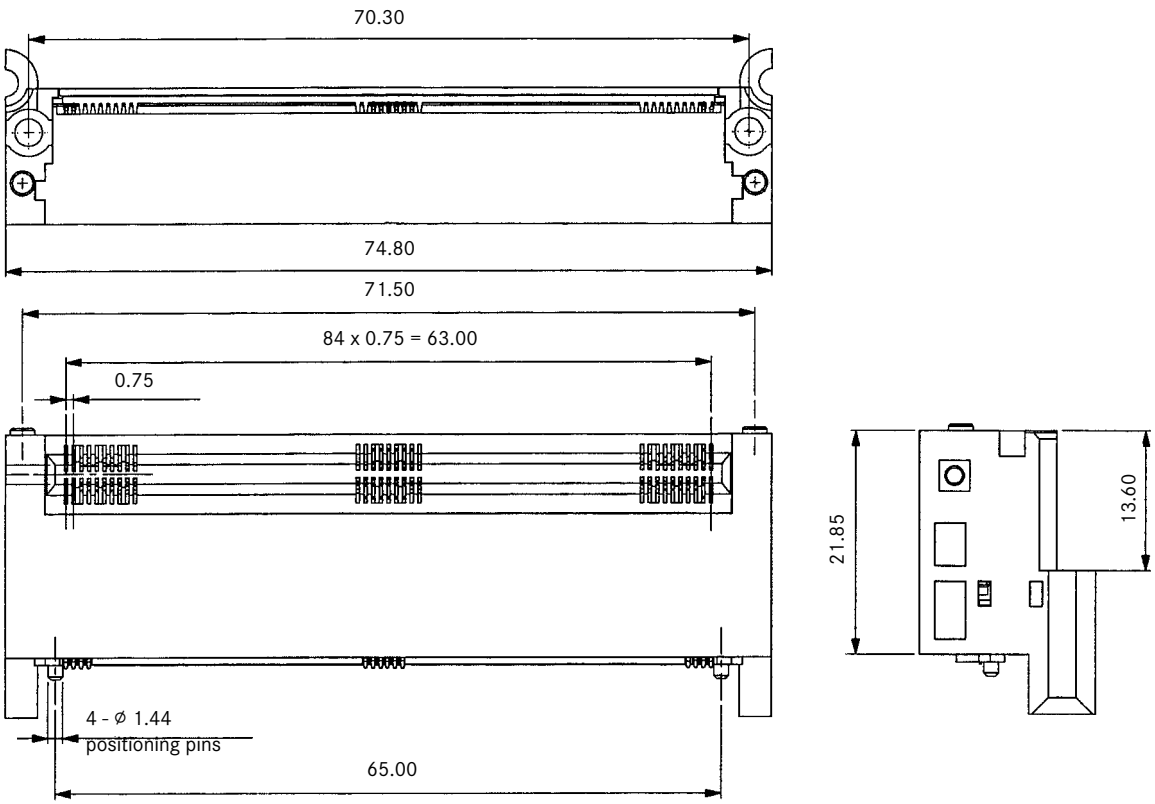

PCB LAYOUT CN074-085-0003 (TYPE B)

Top View from Connector

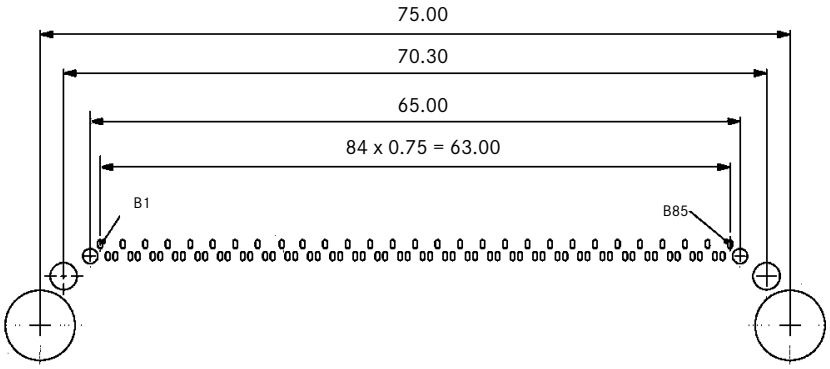

SPECIFICATIONS

Insulation Resistance:	100MΩ min. at 80V DC	
Withstanding Voltage:	80Vrms	
Differential Impedance:	100Ω ±10Ω	
Line Resistance:	Differential pair conductors	= 375mΩ
	General purpose conductors	= 90mΩ
	Power conductors	= 90mΩ
	Ground conductors	= 60mΩ
Attenuation:	<1dB at 8GHz and <2dB at 12GHz	
Return Loss:	<20dB at 5GHz and <13dB at 8GHz	
Cross Talk Ratio:	NE and FE <2%	
Operating Temp. Range:	−55°C to +105°C	
Mating Cycles:	200 times	

PART NUMBER

CN074 - 170 - 0005

- *Series No.
- Number of Contacts
- Design No.

*INFO: including screws and stiffener

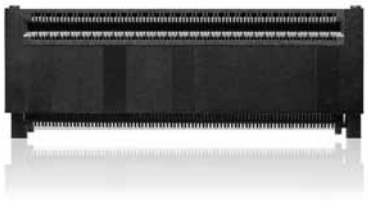

MATERIALS

Case:	PA9T (UL94V-0), black
Housing:	LCP (UL94V-0), black
Contact:	Copper Alloy, Gold plating over Nickel
YFLEX:	LCP/Copper, Gold plating over Nickel
Screw:	Stainless
Stiffener:	Stainless, PA9T (UL94V-0), black

FEATURES

Connector Type:	Extended
Carrier Board:	Conventional
Contacts:	170
Module Slots:	1

OUTLINE CONNECTOR DIMENSIONS CN074-170-0005 (TYPE B+)

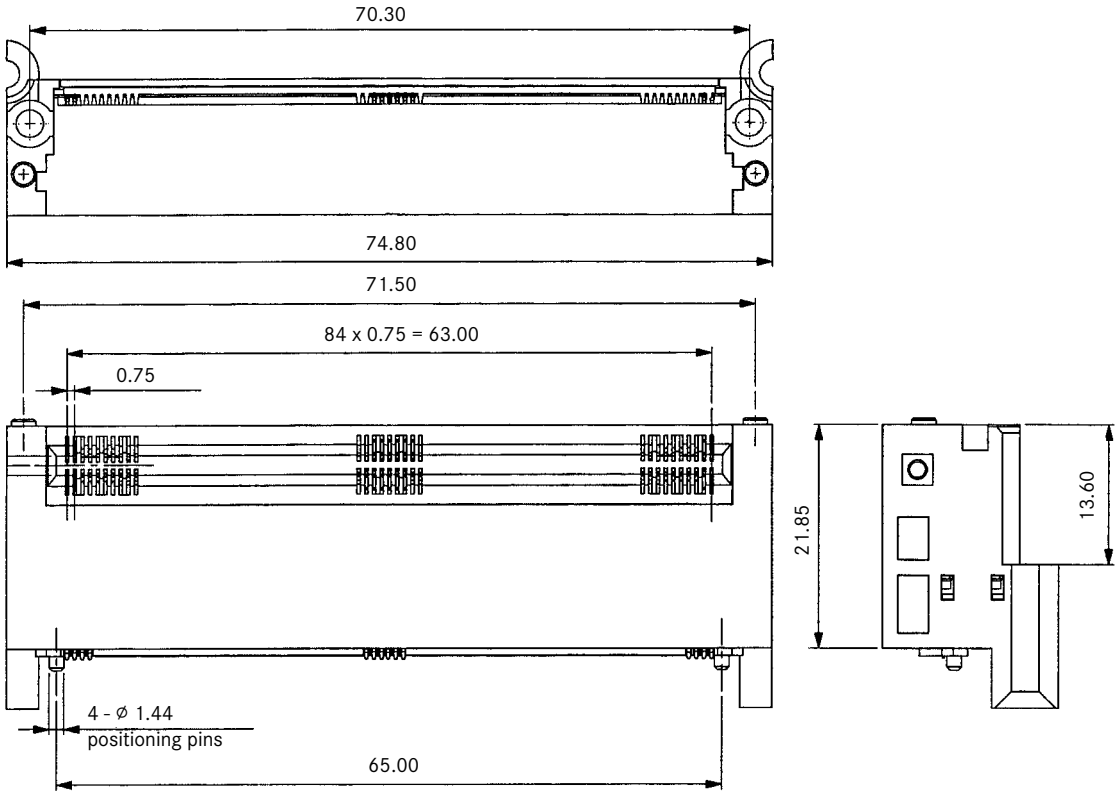

PCB LAYOUT CN074-170-0005 (TYPE B+)

Top View from Connector

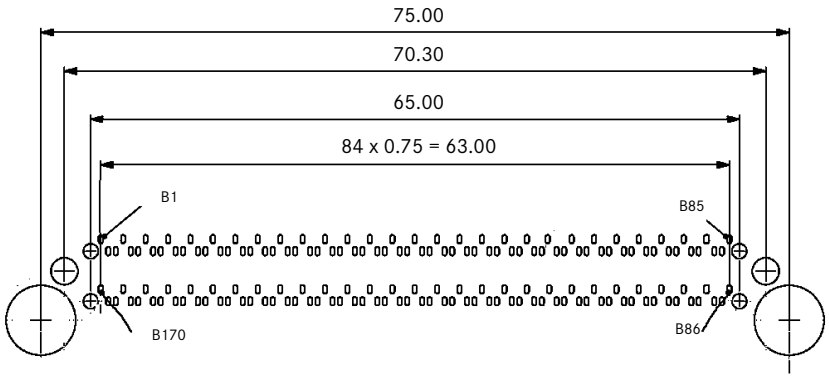

SPECIFICATIONS

Insulation Resistance:	100MΩ min. at 80V DC	
Withstanding Voltage:	80Vrms	
Differential Impedance:	100Ω ±10Ω	
Line Resistance:	Differential pair conductors	= 375mΩ
	General purpose conductors	= 90mΩ
	Power conductors	= 90mΩ
	Ground conductors	= 60mΩ
Attenuation:	<1dB at 8GHz and <2dB at 12GHz	
Return Loss:	<20dB at 5GHz and <13dB at 8GHz	
Cross Talk Ratio:	NE and FE <2%	
Operating Temp. Range:	−55°C to +105°C	
Mating Cycles:	200 times	

PART NUMBER

CN074 - 170 - 0006

- *Series No.
- Number of Contacts
- Design No.

*INFO: including screws and stiffener

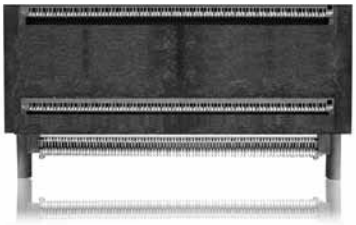

MATERIALS

Case:	PA9T (UL94V-0), black
Housing:	LCP (UL94V-0), black
Contact:	Copper Alloy, Gold plating over Nickel
YFLEX:	LCP/Copper, Gold plating over Nickel
Screw:	Stainless
Stiffener:	Stainless, PA9T (UL94V-0), black

FEATURES

Connector Type:	Basic
Carrier Board:	Cutaway
Contacts:	170
Module Slots:	2

OUTLINE CONNECTOR DIMENSIONS CN074-170-0006 (TYPE AB)

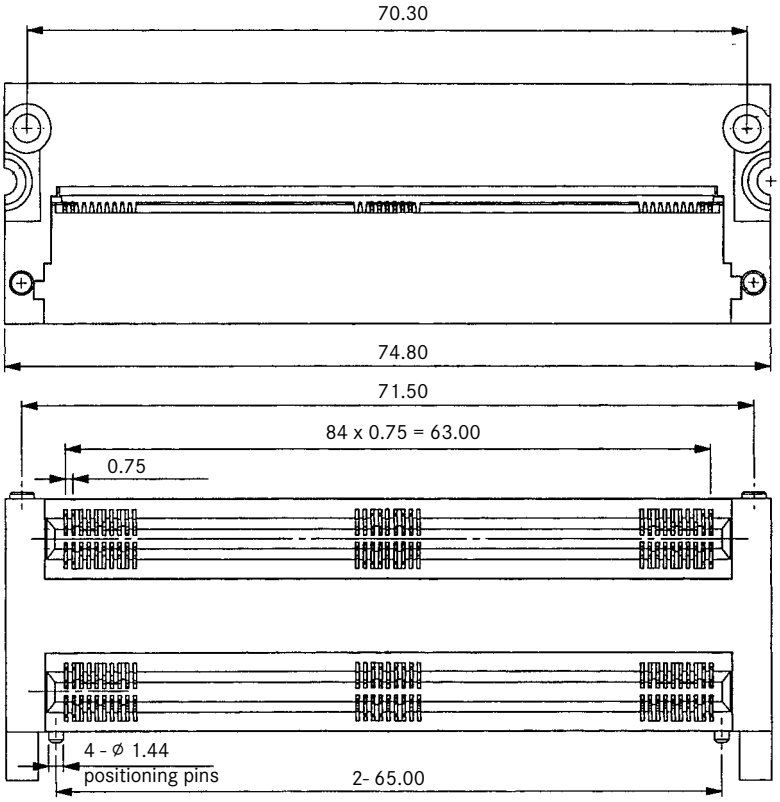

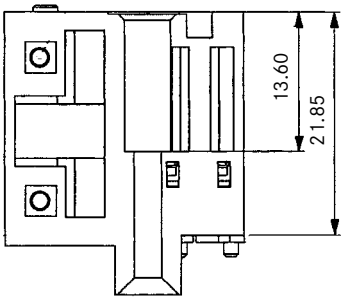

PCB LAYOUT CN074-170-0006 (TYPE AB)

Top View from Connector

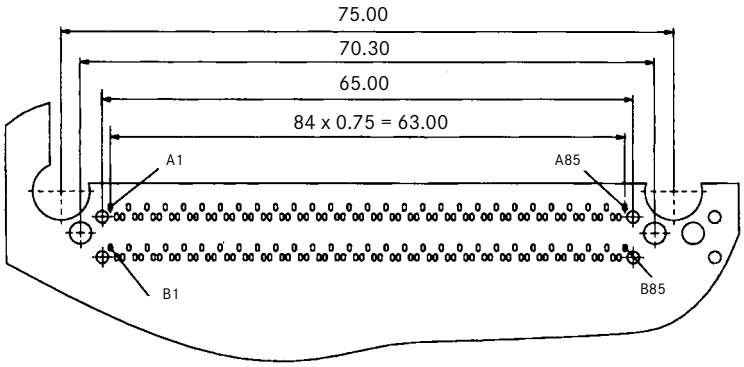

SPECIFICATIONS

Insulation Resistance:	100MΩ min. at 80V DC	
Withstanding Voltage:	80Vrms	
Differential Impedance:	100Ω ±10Ω	
Line Resistance:	Differential pair conductors	= 375mΩ
	General purpose conductors	= 90mΩ
	Power conductors	= 90mΩ
	Ground conductors	= 60mΩ
Attenuation:	<1dB at 8GHz and <2dB at 12GHz	
Return Loss:	<20dB at 5GHz and <13dB at 8GHz	
Cross Talk Ratio:	NE and FE <2%	
Operating Temp. Range:	–55°C to +105°C	
Mating Cycles:	200 times	

PART NUMBER

CN074 - 340 - 0001

- *Series No.
- Number of Contacts
- Design No.

*INFO: including screws and stiffener

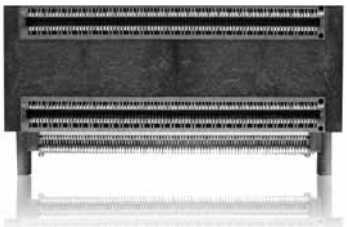

MATERIALS

Case:	PA9T (UL94V-0), black
Housing:	LCP (UL94V-0), black
Contact:	Copper Alloy, Gold plating over Nickel
YFLEX:	LCP/Copper, Gold plating over Nickel
Screw:	Stainless
Stiffener:	Stainless, PA9T (UL94V-0), black

FEATURES

Connector Type:	Extended
Carrier Board:	Cutaway
Contacts:	340
Module Slots:	2

OUTLINE CONNECTOR DIMENSIONS CN074-340-0001 (TYPE A+B+)

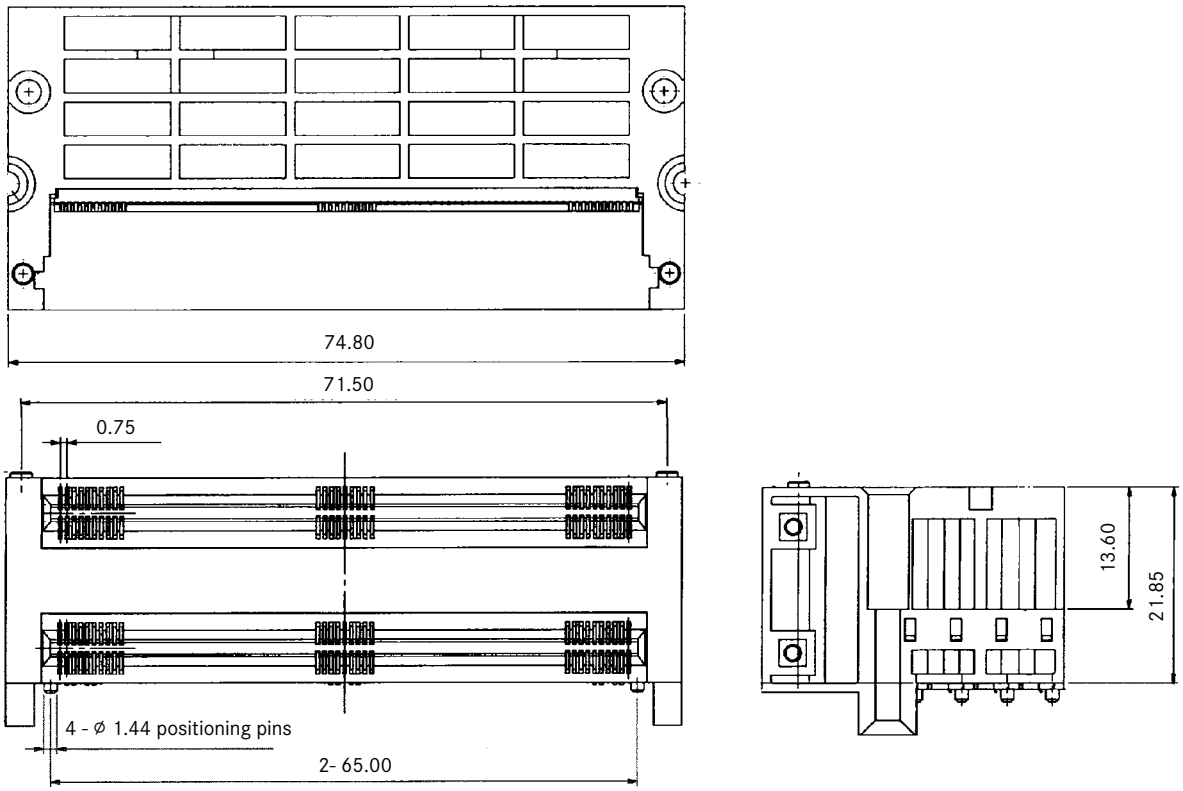

PCB LAYOUT CN074-340-0001 (TYPE A+B+)

Top View from Connector

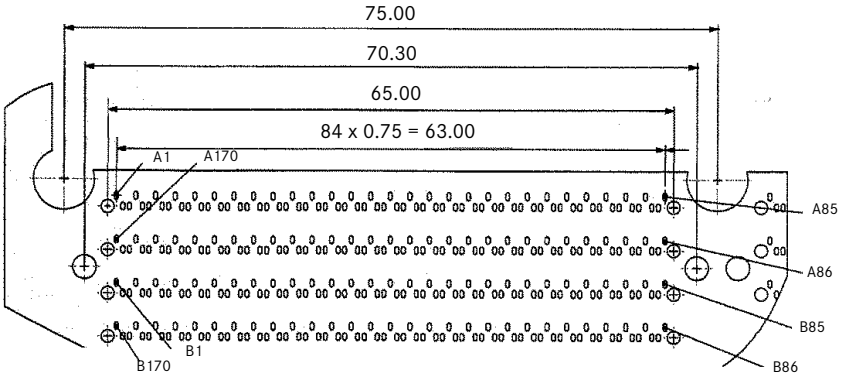

SPECIFICATIONS

Insulation Resistance:	100MΩ min. at 80V DC	
Withstanding Voltage:	80Vrms	
Differential Impedance:	100Ω ±10Ω	
Line Resistance:	Differential pair conductors	= 375mΩ
	General purpose conductors	= 90mΩ
	Power conductors	= 90mΩ
	Ground conductors	= 60mΩ
Attenuation:	<1dB at 8GHz and <2dB at 12GHz	
Return Loss:	<20dB at 5GHz and <13dB at 8GHz	
Cross Talk Ratio:	NE and FE <2%	
Operating Temp. Range:	−55°C to +105°C	
Mating Cycles:	200 times	

PART NUMBER

CN074 - 340 - 0003

- *Series No.
- Number of Contacts
- Design No.

*INFO: including screws and stiffener

MATERIALS

Case:	PA9T (UL94V-0), black
Housing:	LCP (UL94V-0), black
Contact:	Copper Alloy, Gold plating over Nickel
YFLEX:	LCP/Copper, Gold plating over Nickel
Screw:	Stainless
Stiffener:	Stainless, PA9T (UL94V-0), black

FEATURES

Suitable for 1U blade size

OUTLINE CONNECTOR DIMENSIONS CN074-340-0003 (TYPE A+B+ MID SIZE)

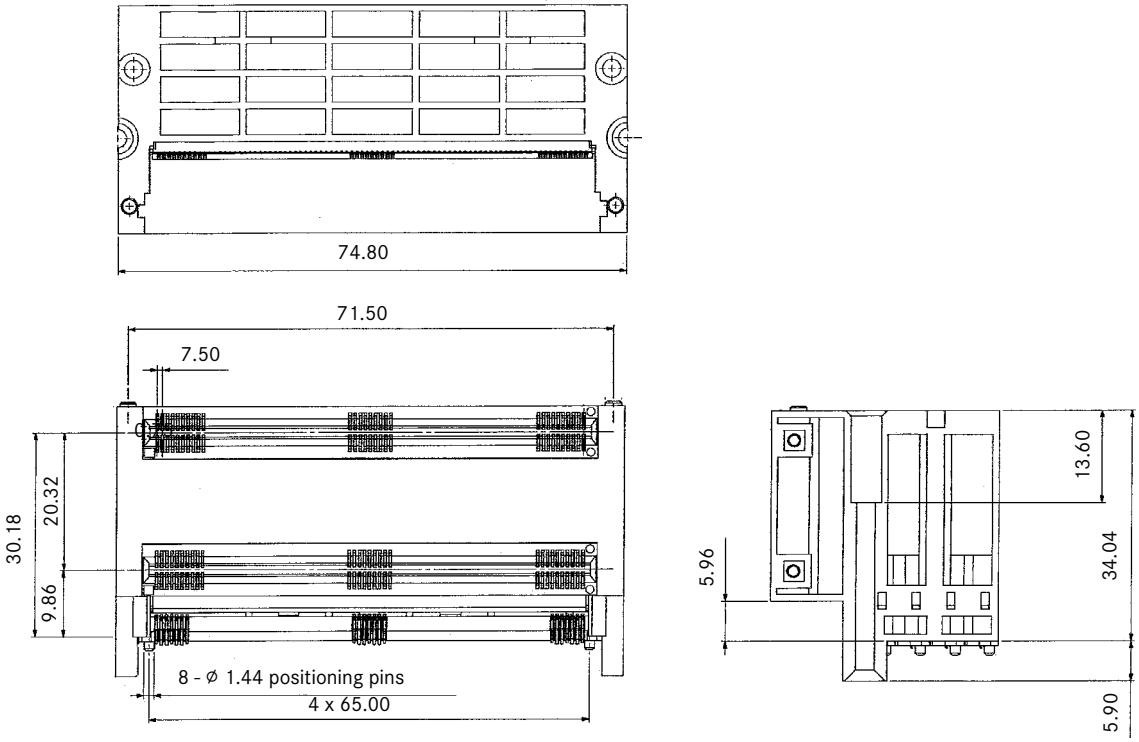

PCB LAYOUT CN074-340-0003 (TYPE A+B+ MID SIZE)

Top View from Connector

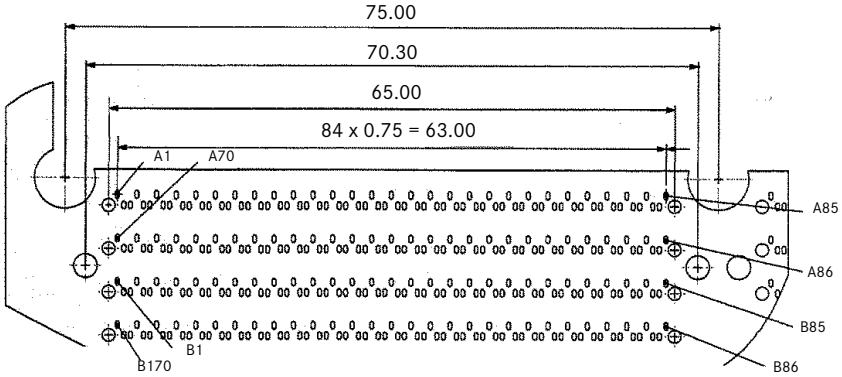

CN080 ADVANCEDMC CONNECTOR FOR MICROTCA

SUPPORTS DATA TRANSFER AT 12.5GBPS AND BEYOND FOR EDGE APPLICATIONS

CN080 carries data signals at 12.5Gbps and beyond between AdvancedMC and MicroTCA backplane, while complying with the MicroTCA design requirements by having 170 contacts with 0.75mm pitch. CN080 is essential to bring the high-performance and reliability of AdvancedTCA to the MicroTCA systems.

„CMT" REALIZES OUTSTANDING ROUTING CAPABILITIES

Our original connector-mounting technology, CMT, requires less inner layers of a backplane, hence offering outstanding routing capabilities to the MicroTCA system

CN080 ASSEMBLED

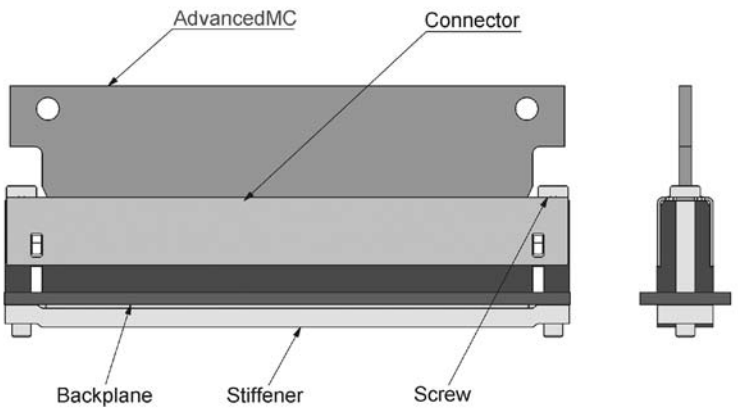

CN080 BACKPLANE

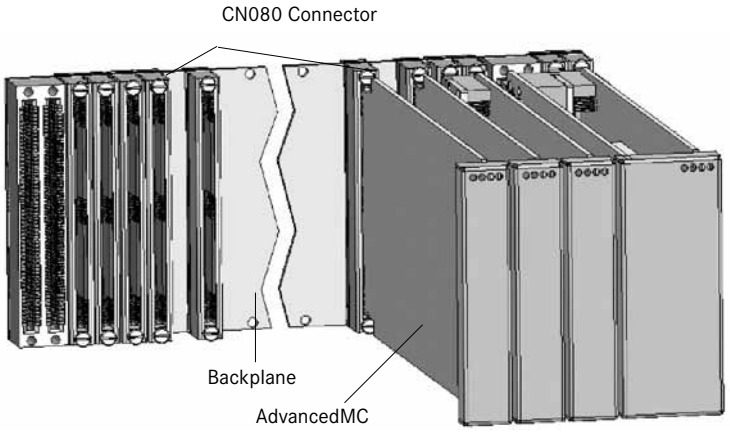

CN080 COMPARISON OF TRANSMISSION WAVE FORMS @12.5GBPS

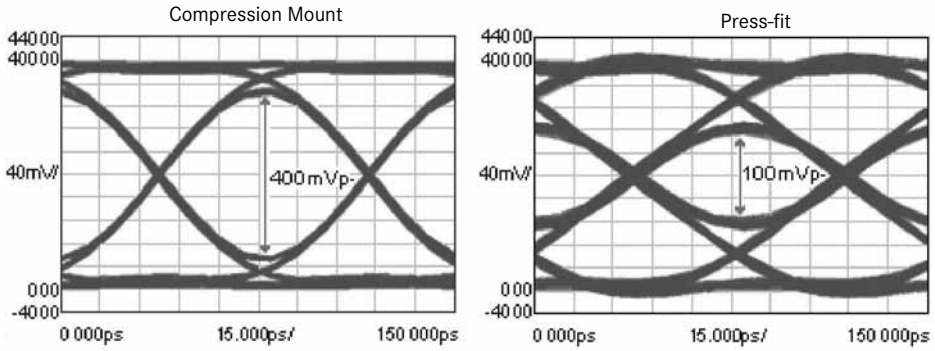

SPECIFICATIONS

Insulation Resistance:	100MΩ min. at 80V DC
Withstanding Voltage:	80Vrms
Differential Impedance:	100Ω ±10Ω
Line Resistance:	25mΩ
Attenuation:	<1dB at 8GHz and <2dB at 12GHz
Return Loss:	<20dB at 5GHz and <13dB at 8GHz
Cross Talk Ratio:	NE and FE <3%
Operating Temp. Range:	–55°C to +105°C
Mating Cycles:	200 times

MATERIALS

Housing:	LCP (UL94V-0), black
Shell:	Stainless
Contact:	Copper Alloy, Gold plating over Nickel
Screw:	Stainless
Stiffener:	Stainless,
Insulator:	PA9T, black

PART NUMBER

CN080 - 170 - ** * *

Series No.

Number of Contacts

01 = Standard stiffener
11 = with long screws for 5mm PCB thickness
21 = with long screws for 7mm PCB thickness

02 = with special stiffener for component mounting
12 = with long screws for 5mm PCB thickness
22 = with long screws for 7mm PCB thickness

OUTLINE CONNECTOR DIMENSIONS CN080-170-000*

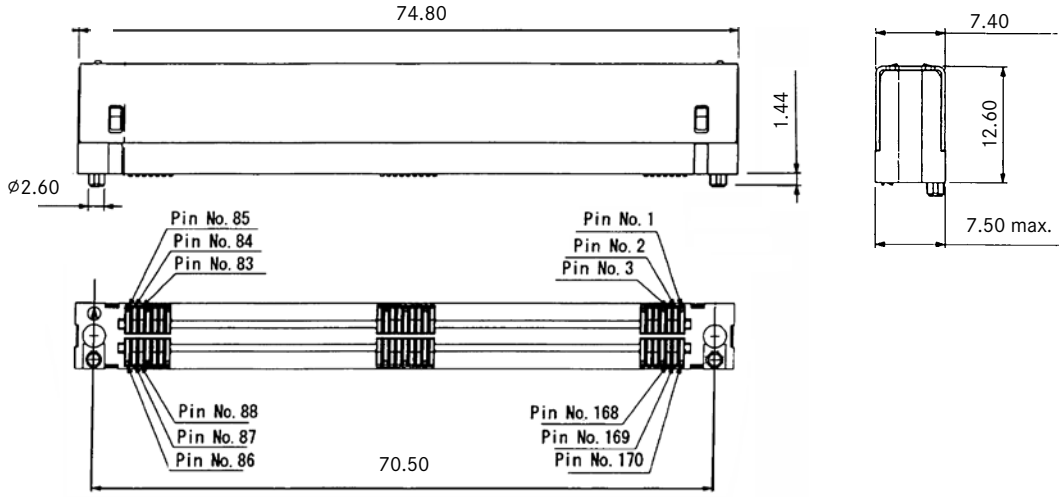

STIFFENER OUTLINE DIMENSIONS

CN080-170-00*1

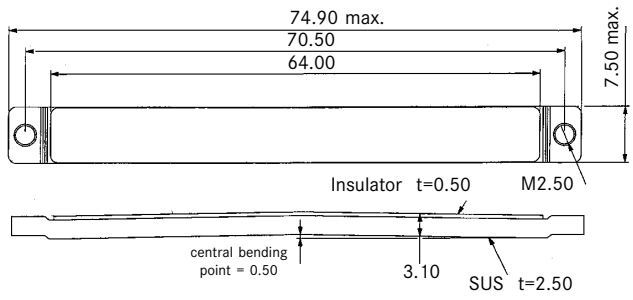

CN080-170-00*2

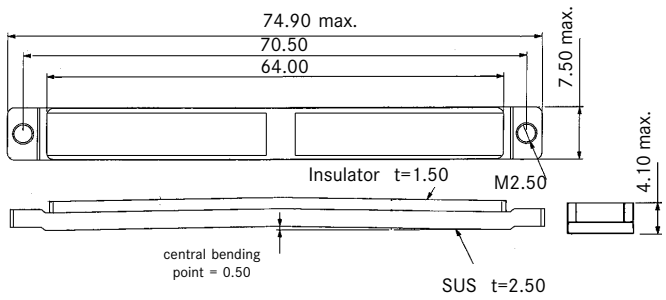

PCB LAYOUT CN080-170-00**

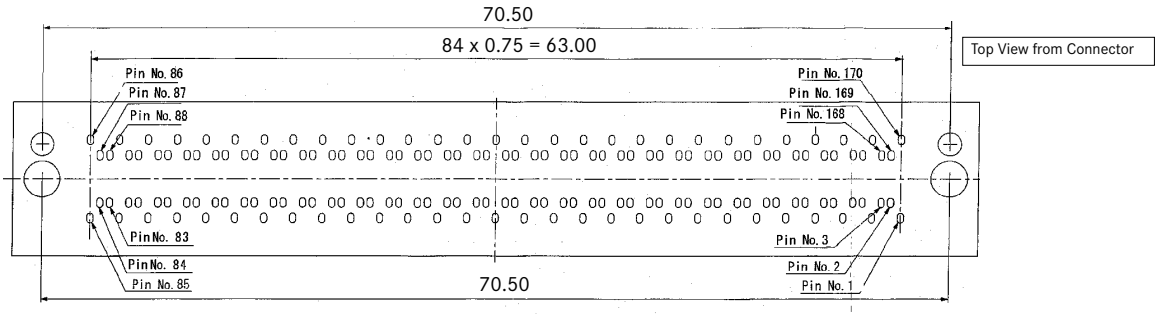

SERIES CN084 MCH PLUG (MICRO TCA CARRIER HUB)

FEATURES

- Reduced insertion / extraction force
- Different standard combination types
- Flexible for customised versions
- High speed design up to 12.5 Gbps
- Up to 680 pins
- Assembly tool available

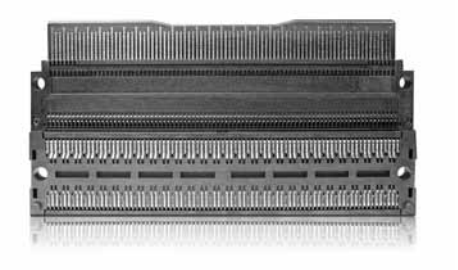

PART NUMBER

CN084 - 680 - 1232 - 1010 - 0

- Series No.
- Number of Contacts
- Type and position of MCH Tongues: 1 = MCH-1, 2 = MCH-2, 3 = MCH-3 (see tables below)
- 0 = Pre-assembled PCB; 1 = Card Slot for MCH Card (1.6mm thickness)
- Design No.

OVERVIEW OF STANDARD VARIATIONS

CN084-680-1232-1010-0	Pin count	680 MCH-1 MCH-2 MCH-3 MCH-2	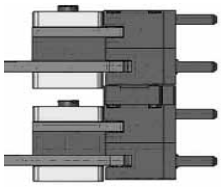
CN084-680-1332-1110-0	Pin count	680 MCH-1 MCH-3 MCH-3 MCH-2	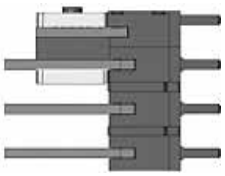
CN084-340-0032-0010-0	Pin count	340 MCH-3 MCH-2	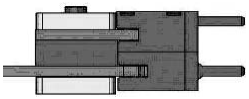
CN084-340-1200-1000-0	Pin count	340 MCH-1 MCH-2	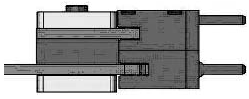
CN084-340-1300-1100-0	Pin count	340 MCH-1 MCH-3	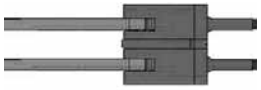
CN084-170-1000-1000-0	Pin count	170 MCH-1	
CN084-170-0030-0010-0	Pin count	170 MCH-3	

For other CN084 combinations and assembly tooling please contact Yamaichi

SPECIFICATIONS

Insulation Resistance:	100MΩ initial
Voltage :	80Vrms
Current Carrying Capacity:	24 pins = 11.625A
	72 pins = 9.4A
Operating Temp. Range:	–55°C to +105°C

MATERIALS

Insulator:	Thermoplastic Polyester (UL94V-0), grey
Contact:	Copper Alloy

FEATURES

- Design acc. to PICMG MicroTCA.0
- Press-fit termination

PART NUMBER

CNU009 * - 096 - 1001

- Series No.
- Contact Styles
  P = Male (right angle)
  S = Female (vertical)
- Pin Count
- Plating : (Mating/Termination)
  1: 30 µ“ Au min. / Tin

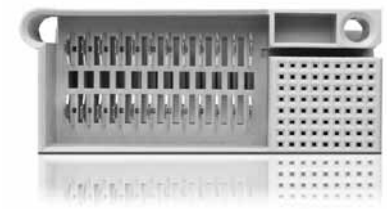

OUTLINE CONNECTOR DIMENSIONS CNU009S-096-1001

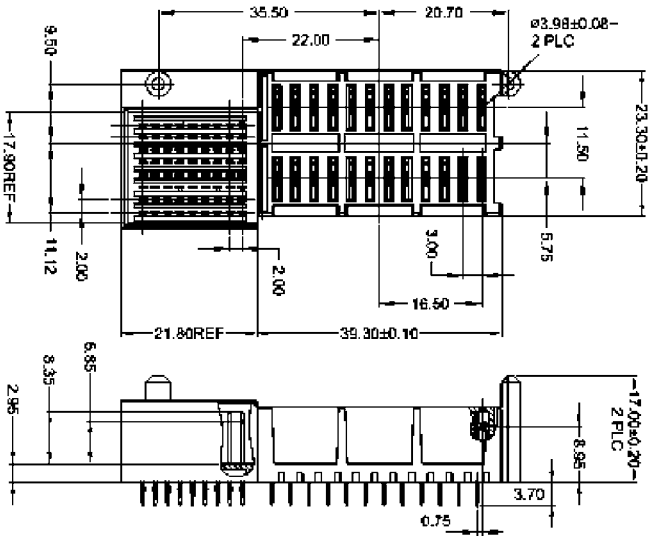

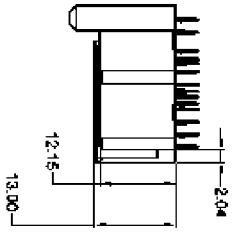

PCB LAYOUT

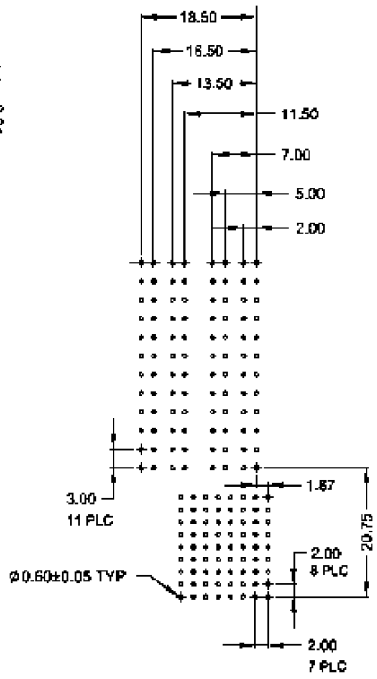

OUTLINE CONNECTOR DIMENSIONS CNU009P-096-1001

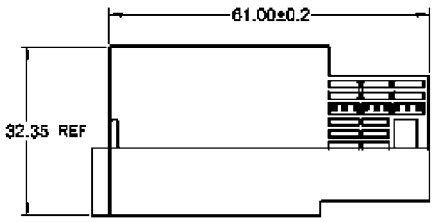

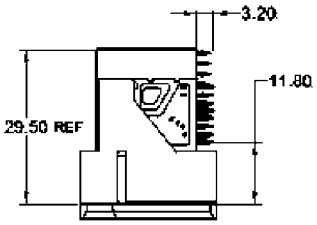

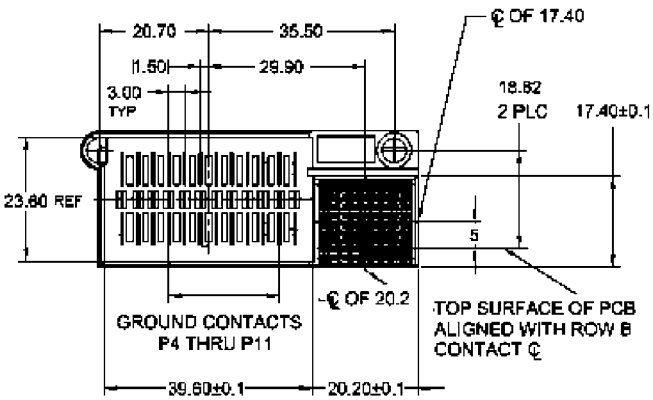

PCB LAYOUT

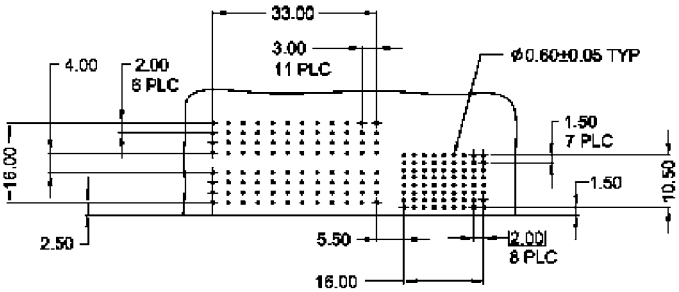

SPECIFICATIONS

Insulation Resistance:	≥5GΩ		
Contact Resistance:	Power contact	=	2.2mΩ max.
	Signal contact	=	8.5mΩ max.
Voltage Proof:	Pin 1 - 16	=	1,000Vrms
	Pin 17 - 34	=	2,000Vrms
Current Carrying Capacity:	Signal Pins	=	1 Amp
	Power pins	=	16 Amp
Operating Temp. Range:	-55°C to +125°C		

PART NUMBER

CNU004 * - 030 - * 001

- Series
- Contact Styles
  P = Male (right angle)
  S = Female (vertical)
- Pin Count
- *Plating Option: (Mating/Termination)
  1: 30 µ" Au min. / Tin
  4: Gold Flash all over

*other plating options available on request

MATERIALS

Insulator:	PA46 30%GF (UL94V-0), black
Contact:	Copper Alloy with 50µ" min.
	Ni underplating

FEATURES

- Hot swapable
- Design acc. to PICMG 3.0
- Pin positions 1-4 are not populated and are reserved for future use
- Press-fit termination

OUTLINE CONNECTOR DIMENSIONS CNU004S-030-*001

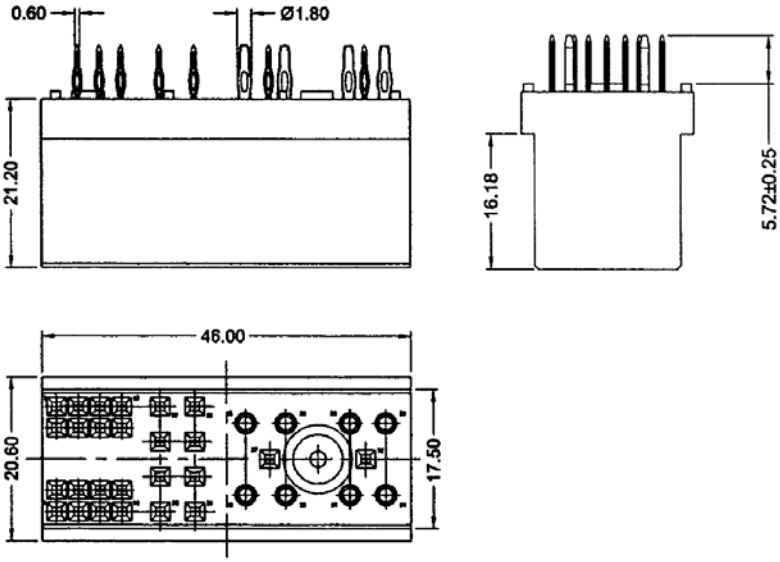

PCB LAYOUT

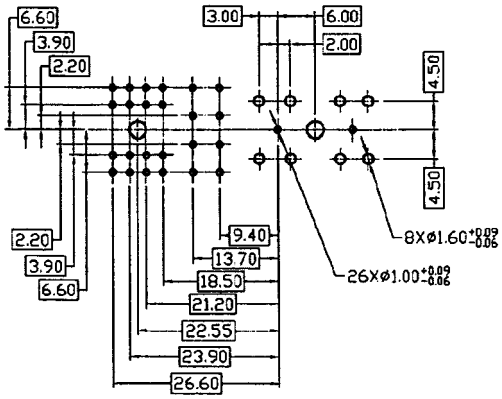

OUTLINE CONNECTOR DIMENSIONS CNU004P-030-*001

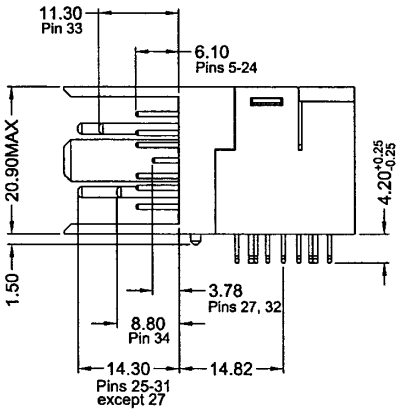

PCB LAYOUT

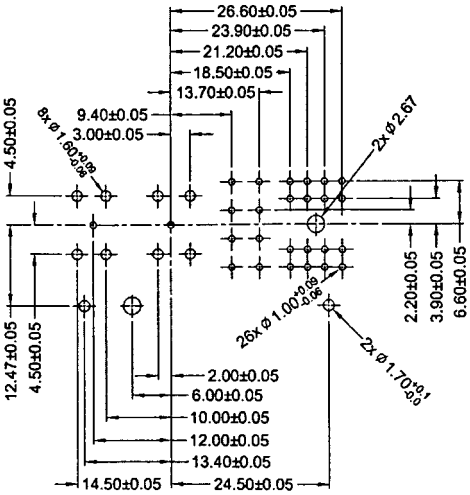

The current market situation needs and is ready for high speed performance connectors and cables, which support high speed “Gbps” for digital consumers, car electronics, telecom network equipment etc...

Yamaichi is offering a wide range of different high speed products with excellent technical behaviour and highest standards of transmitting quality. With our products we are able to offer complete connector and cable systems for a variety of different applications.

OVERVIEW OF THE CONNECTORS AND CABLE SYSTEMS

CONNECTOR HF507S

- The series for LVDS, HDMI, S-ATA, PCI-Express applications with transfer rates up to 5 Gbps
- VESA (Video Electronics Standard Association) compliant
- One connector and three possible types of cables to match perfectly customer requirements

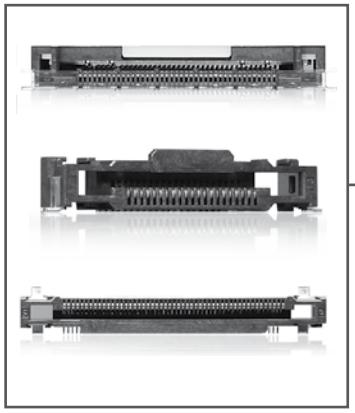

Connects with

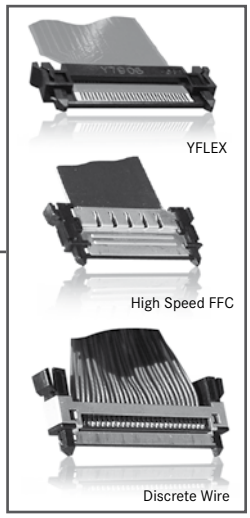

CONNECTOR HF601 SERIES

- The series for HDMI, S-ATA applications with transfer rates up to 5 Gbps
- ZIF-Type connector can be used with two different cable types

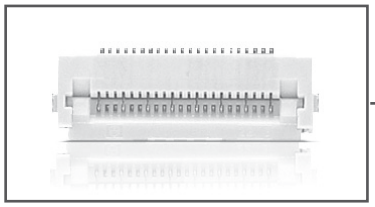

Connects with

CONNECTOR HF509 SERIES

- For IEEE1394, LVDS, TMDS, S-ATA,
- PCI-Express applications
- Usable with YFLEX

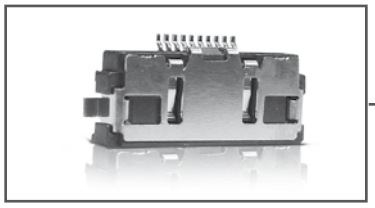

Connects with

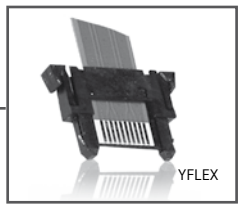

APPLICATIONS

- Car navigation systems
- Automated Test Equipment
- Medical Imaging
- Industrial Process Control
- Network systems
- Digital TV, Studio Cameras...

SERIES HF507S NON-ZIF 90° SOCKET DIRECT MATING TYPE

SPECIFICATIONS

Insulation Resistance:	100MΩ min.
Contact Resistance:	100mΩ max.
Withstanding Voltage:	125V ACrms for 1 minute
Voltage Rating:	50V ACrms
Current Rating:	0.3A
Operating Temp. Range:	-20°C to +85°C
Inserertion / Extraction:	30 times max.

MATERIALS AND FINISH

Housing:	LCP (GF), black
Lock Hold:	SUS t = 0.2mm
Contacts and Terminal:	Phosphor Bronze, (t = 0.15mm) Ni-Au plating

FEATURES

- Suitable for LVDS, HDMI, DVI, PCI express and S-ATA data transmission
- One push lock funktion for FFC/FPC insertion integrated
- One push button to extract FFC
- Realization of high speed data transmission at Gbps level
- 100Ω differential impedance
- High EMI protection due to shielding
- Tape and Reel (1,200 per reel)

PART NUMBER (CONNECTOR)

HF507S - ** - 72

- Series No.
- No. of Contacts: 41 and 51
- Design No.

PART NUMBER (FFC CABLE)

YFC - ** - ** - DM - *

- Series No.
- No. of Contacts: 41 and 51
- Total Length in mm
- Design No.
- FFC Mating Direction, A = same side, B = opposite side

OUTLINE DIMENSIONS FOR 90° SOCKET

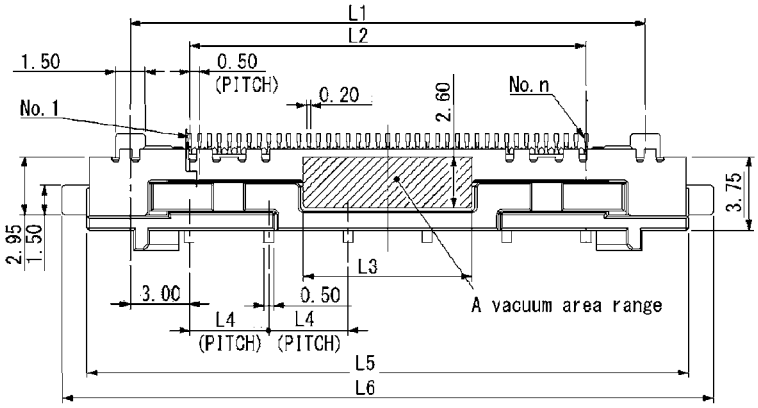

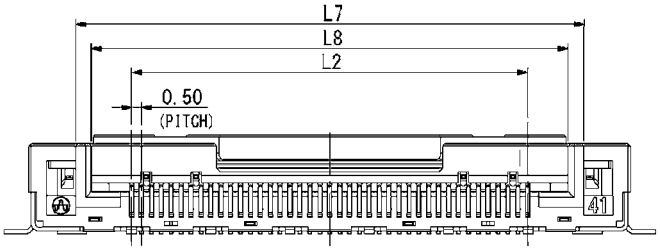

OUTLINE DIMENSIONS FFC

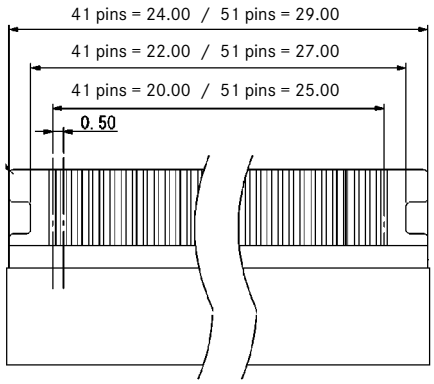

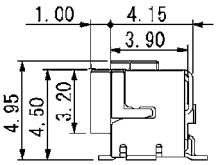

RECOMMENDED PCB LAYOUT

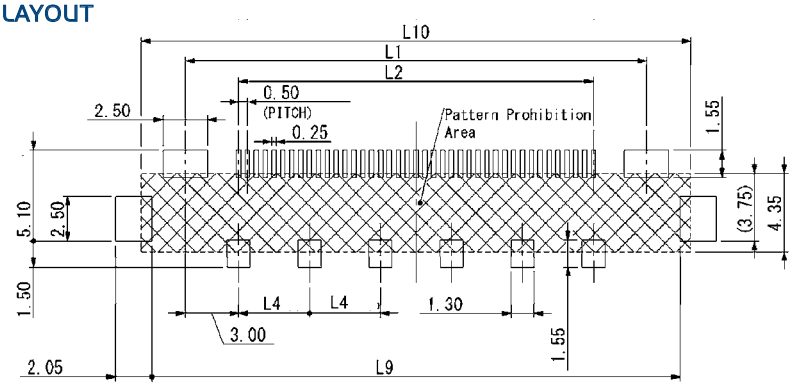

Part Number	Pin Count	L1	L2	L3	L4	L5	L6	L7	L8	L9	L10
HF507S-41-72	41	26.00	20.00	11.70	4.10	30.35	32.85	30.67	24.06	29.75	30.95
HF507S-51-72	51	31.00	25.00	11.70	5.10	35.35	37.85	25.67	29.06	34.75	35.95

SPECIFICATIONS

Insulation Resistance:	100MΩ min.
Contact Resistance:	100mΩ max.
Withstanding Voltage:	125V ACrms for 1 minute
Voltage Rating:	50V ACrms
Current Rating:	0.3A
Operating Temp. Range:	-20°C to +85°C
Differential Impedance:	100 Ω
Inserertion / Extraction:	30 times max.

MATERIALS AND FINISH

Housing:	LCP (GF), black
Lock Hold:	SUS t = 0.2mm
Contacts:	Phosphor Bronze, (t = 0.15mm) Ni-Au plating
Terminal:	Phosphor Bronze, (t = 0.15mm) Ni-Au plating

FEATURES

- Suitable for LVDS, HDMI, DVI, PCI express and S-ATA data transmission
- Easy operation by side-locking mechanism prevents cable angular insertion and guarantees secure locking
- Up to 5Gbps data transmission rate
- 100 Ohm differential impedance

PART NUMBER (CONNECTOR)

HF507S - 21 - **

Series No.

No. of Contacts:
21, 31, 41 and 51

02 = 180° without Shielding
04 = 180° with Shielding*

*180° with shielding not available for 21 an 31 pin versions

APPLICABLE CABLE

see page 94 to 96

OUTLINE DIMENSIONS FOR 180° SOCKET

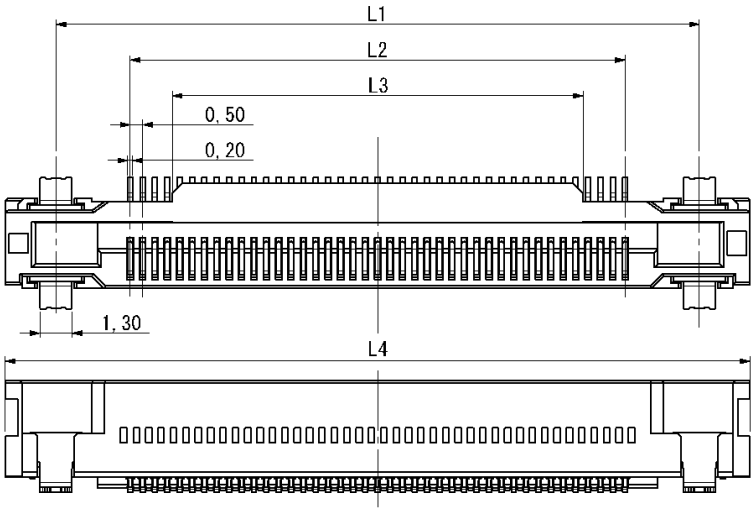

ORIENTATION FOR 180° SOCKET

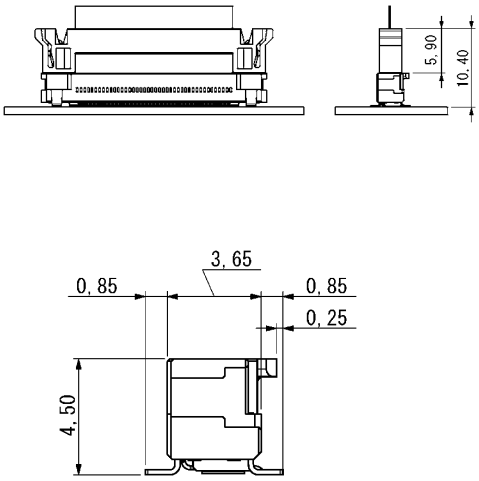

RECOMMENDED PCB LAYOUT

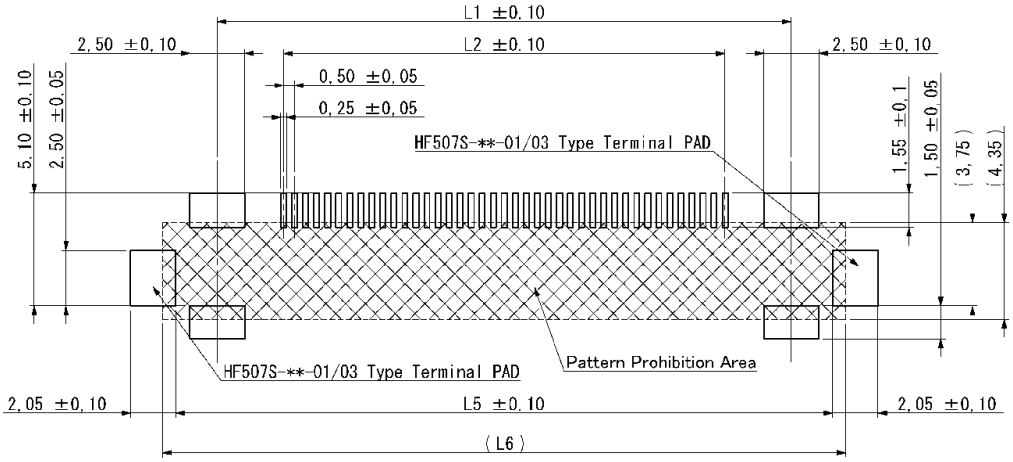

Part Number	Pin Count	L1	L2	L3	L4	L5	L6
HF507S-21-0*	21	16.00	10.00	6.60	20.10	19.75	20.95
HF507S-31-0*	31	21.00	15.00	11.60	25.10	24.75	25.95
HF507S-41-0*	41	26.00	20.00	16.60	30.10	29.75	30.95
HF507S-51-0*	51	31.00	25.00	21.60	35.10	34.75	35.95

SPECIFICATIONS

Insulation Resistance:	100MΩ min.
Contact Resistance:	100mΩ max.
Withstanding Voltage:	125V ACrms for 1 minute
Voltage Rating:	50V ACrms
Current Rating:	0.3A
Operating Temp. Range:	-20°C to +85°C
Differential Impedance:	100 Ω
Inserertion / Extraction:	30 times max.

PART NUMBER

HF507S - 41 - **

- Series No.
- No. of Contacts: 21, 31, 41 and 51
- 01 = 90° without Shielding
  03 = 90° with Shielding

MATERIALS AND FINISH

Housing:	LCP (GF), black
Lock Hold:	SUS t = 0.2mm
Contacts:	Phosphor Bronze, (t = 0.15mm) Ni-Au plating
Terminal:	Phosphor Bronze, (t = 0.15mm) Ni-Au plating

FEATURES

- Suitable for LVDS, HDMI, DVI, PCI express and S-ATA data transmission
- Easy operation by side-locking mechanism prevents cable angular insertion and guarantees secure locking
- Up to 5Gbps data transmission rate
- 100 Ohm differential impedance

APPLICABLE CABLE

see page 94 to 96

ORIENTATION FOR 90° SOCKET

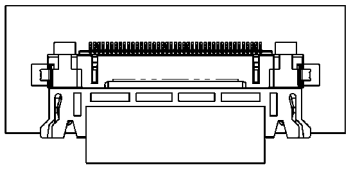

OUTLINE DIMENSIONS FOR 90° SOCKET

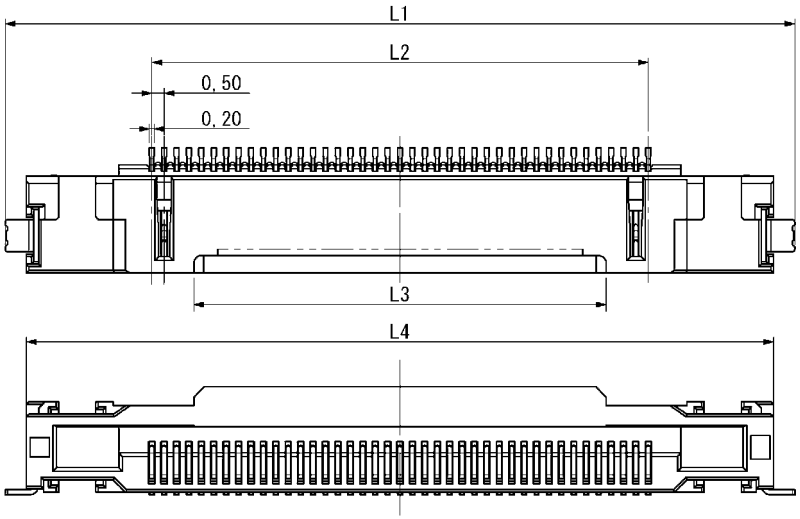

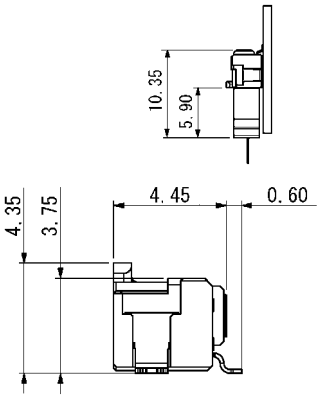

RECOMMENDED PCB LAYOUT

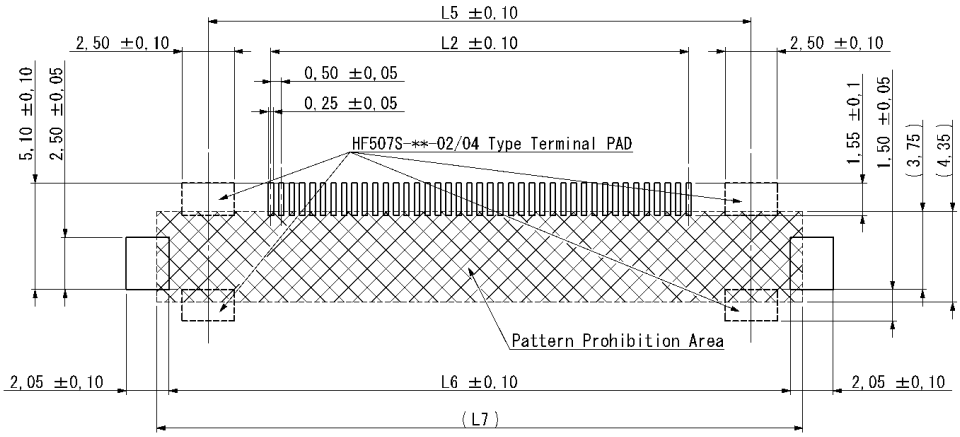

Part Number	Pin Count	L1	L2	L3	L4	L5	L6	L7
HF507S-21-0*	21	16.00	10.00	6.60	20.10	16.00	19.75	20.95
HF507S-31-0*	31	21.00	15.00	11.60	25.10	21.00	24.75	25.95
HF507S-41-0*	41	26.00	20.00	16.60	30.10	26.00	29.75	30.95
HF507S-51-0*	51	31.00	25.00	21.60	35.10	31.00	34.75	35.95

SPECIFICATIONS

Differential Impedance 100Ω in combination with HF507 Connector Series

FEATURES ADAPTER AND CABLE:

- High speed transmission up to 5 Gbps
- Pin counts 21,31,41 and 51pin
- Easy operation by side-locking mechanism
- Supports LVDS, HDMI and other high speed interface specifications
- 100 Ohm differential impedance
- Can be used for different High Speed connector systems: HF507, HF509 and HF601
- RoHS compliant

PART NUMBER

We create your customized cable accordingly to your specification:

- Pin count and length
- Number of layers
- Data rates to transfer
- High speed interface specification, LVDS, HDMI etc.

MOQ 1,000 pcs, repeatable orders are required.
Tooling costs can occur.

ADAPTER

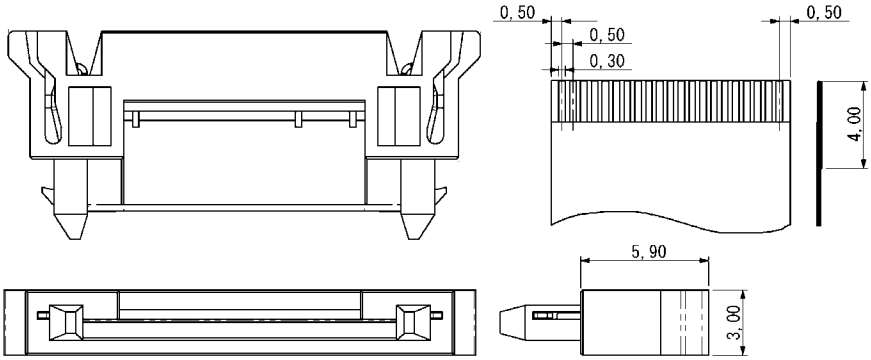

TEST DATA

Item	Condition	Result
Resistance value per bump	Room temperature, normal humidity	Within 6mΩ
Temperature cycle test	-55°C to +125°C, 1,000 cycles	Resistance change : within 10%
High temperature test	+85°C, 1,000h	Resistance change : within 10%
Low temperature test	-40°C, 1,000h	Resistance change : within 10%
High temperature Constant humidity test	+85°C, 90%RH, 1,000h	Resistance change : within 10%
Ion migration test	+40°C, 90% RH, 60VDC, 1,000h	No change
Peeling test	90°C peels (copper thickness: 35μm)	0.8KN/m or above
Solder resistance test	+260°C, 24s	No change
Dielectric constant (1GHz)	Bridge method	2.8
Dissipation factor (1GHz)	Bridge method	0.0025
Moisture absorption	+23°C, 24h	0.04% or below
Thermal expansion coefficient	TMA method	Longitudinal : 17ppm Lateral : 17ppm

STRUCTURE OF DOUBLE-SIDED YFLEX

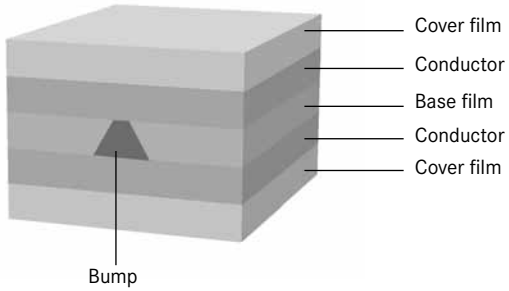

MATERIAL

Base film	Liquid crystal polymer (Thickness: 25μm, 50μm)
Conductor	Copper (Thickness: 9μm, 12μm, 18μm, 35μm)
Inter-layer connection (Conductive bump)	Ag conductive paste
Cover film	Thermosetting resist, Photo resist Polyimide film, Polyester film

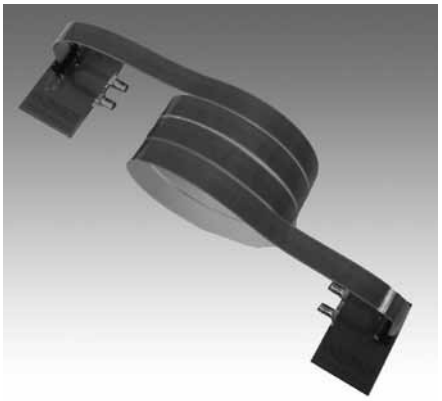

STRUCTURE OF DOUBLE-SIDED YFLEX

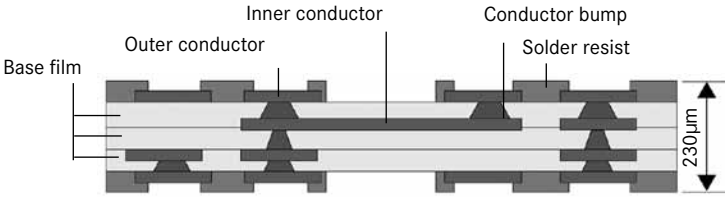

SPECIFICATIONS

Insulation Resistance:	500MΩ min. at 125V DC
Contact Resistance:	50mΩ
Withstanding Voltage:	125V AC for 1 minute
Voltage Rating:	50V ACrms
Current Rating:	0.3A
Operating Temp. Range:	-20°C to +85°C
Inserertion / Extraction:	10 times

MATERIALS AND FINISH

Housing:	LCP (GF), black
Lock Hold:	SUS t = 0.2mm
Contacts:	Phosphor Bronze, (t = 0.15mm) Ni-Au plating
Terminal:	Phosphor Bronze, (t = 0.15mm) Ni-Au plating

FEATURES

- Standard crimp tool can be used
- Applicable wire AWG30/36 Standard
- Easy operation by side-locking mechanism prevents cable angular insertion and guarantees secure locking

PART NUMBER

HF507P - ** - 01 *

- Series No.
- No. of Contacts: 41 and 51
- 5 = 90° without Shielding
  6 = 90° with Shielding

PART NUMBER (CONTACTS)

HF507P - CT379 * -CT

- 0 = Upper Contact
  1 = Lower Contact

Note: Both contacts have to be ordered seperatly

OUTLINE DIMENSIONS

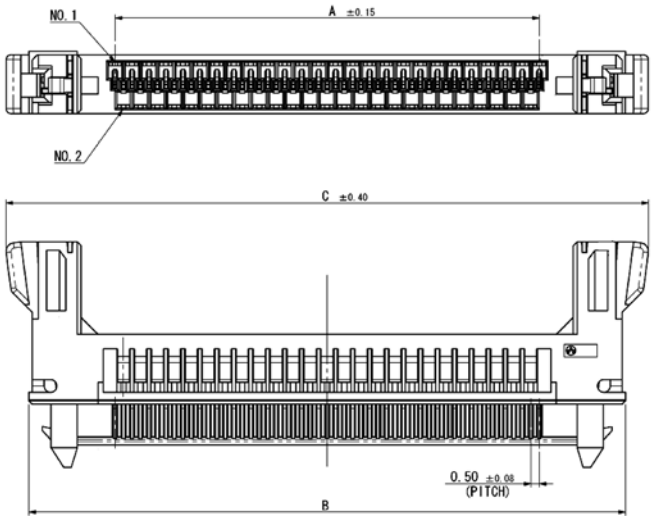

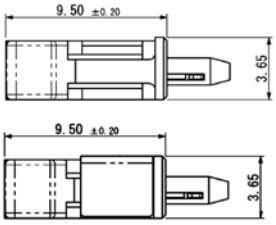

HF507P-**-15 without shielding

HF507P-**-16 with shielding

CONTACT DETAILS

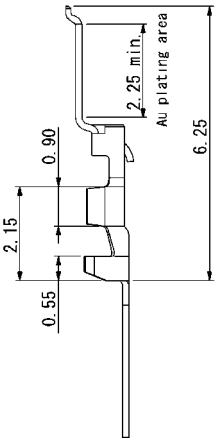

HF507P-CT3790-CT
Upper Contact

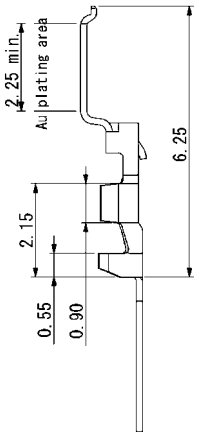

HF507P-CT3791-CT
Lower Contact

Part Number	Pin Count	L1	L2	L3
HF507P-41-0*	41	20.00	30.15	32.85
HF507P-51-0*	51	25.00	35.15	37.85

SPECIFICATIONS

Insulation Resistance:	100MΩ min. at 500V DC or higher
Contact Resistance:	1.7Ω/m
Withstanding Voltage:	250V AC for 1 minute
Voltage Rating:	30V AC DC
Current Rating:	0.2A or less
Operating Temp. Range:	-40°C to +80°C
Characteristic Impedance:	100±10Ω
Intra / Inter Skew:	10 ps/m or less
Attenuation:	19db/m at 5GHz (reference only)
Bending at 180°:	20 times or more

PART NUMBER

YFT - ** - 250 - * - *

- Series No.
- No. of Contacts: 41 and 51
- Length in mm
- A = Adapters on the same side
  B = Adapters on reversed side
- No Mark = One side shielded
  DS = Double sided shielded

MATERIALS AND FINISH

Housing:	LCP (GF), black
Lock Hold:	SUS t = 0.2mm
Contacts:	Phosphor Bronze, (t = 0.15mm) Ni-Au plating
Terminal:	Phosphor Bronze, (t = 0.15mm) Ni-Au plating

FEATURES

- High speed transmission 3Gbps
- Differential impedance 100Ω
- One or double sided shielding available
- UL compliant

OUTLINE DIMENSIONS

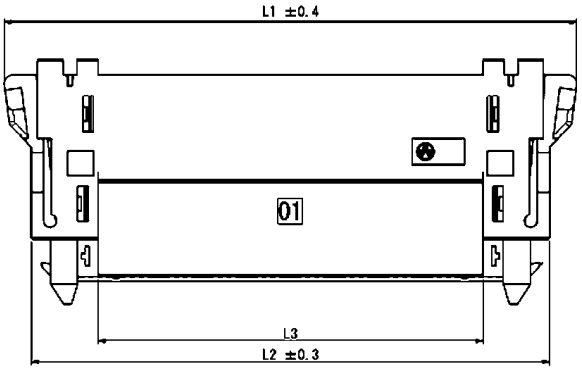

OUTLINE SHIELDING DIMENSIONS

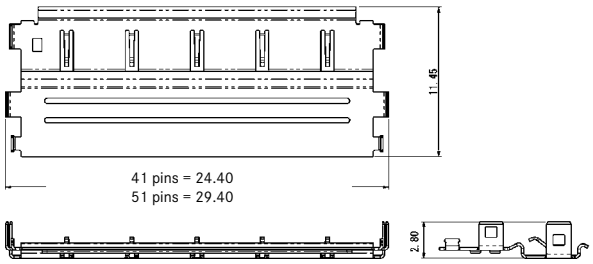

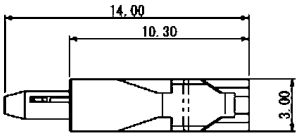

OUTLINE CABLE DIMENSIONS

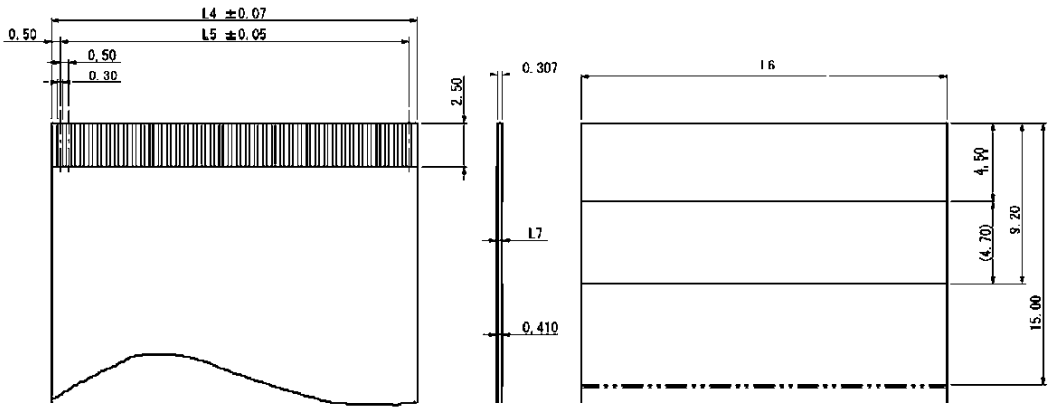

Part Number	Pin Count	L1	L2	L3	L4	L5	L6
YFT-41-***-*	41	32.85	29.75	22.10	20.00	21.00	19.75
YFT-51-***-*	51	37.85	34.75	27.10	25.00	26.00	24.75

SPECIFICATIONS

Insulation Resistance:	1,00MΩ
Conductor Resistance.	2.2 Ω / meter
Withstanding Voltage:	500V AC rms for 1 minute
Voltage Rating:	60V (UL20706)
Operating Temp. Range:	-40°C to +105°C (UL20706)

MATERIALS AND FINISH

Conductor:	Au plated Cu
Insulation Tape:	Polyester, white
Supporting Tape:	Polyester, blue

FEATURES

- Versions with positioning part available on request
- Minimum order quantity may occur

PART NUMBER

HF601 - F5 - ** - *** - * * - F - *

- Series No.
- Pitch: 0.5mm
- Pin Counts: 10, 20, 26, 30, 40, 45, 50, and 60
- Insulation Length in mm
  Total length – 8 mm (2 x stripped lenght)
- Direction of Supporting Tape
  A = same B = opposite
- 0 = No ears
  1 = Ears one side
  2 = Ears both sides
- Plating: F = Au
- S = UL 2896
  V = UL20706/20861

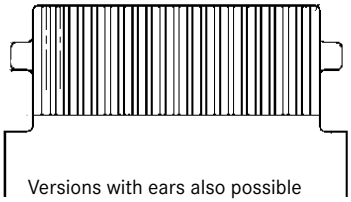

Versions with ears also possible
for dimensions please see page 99

OUTLINE DIMENSIONS

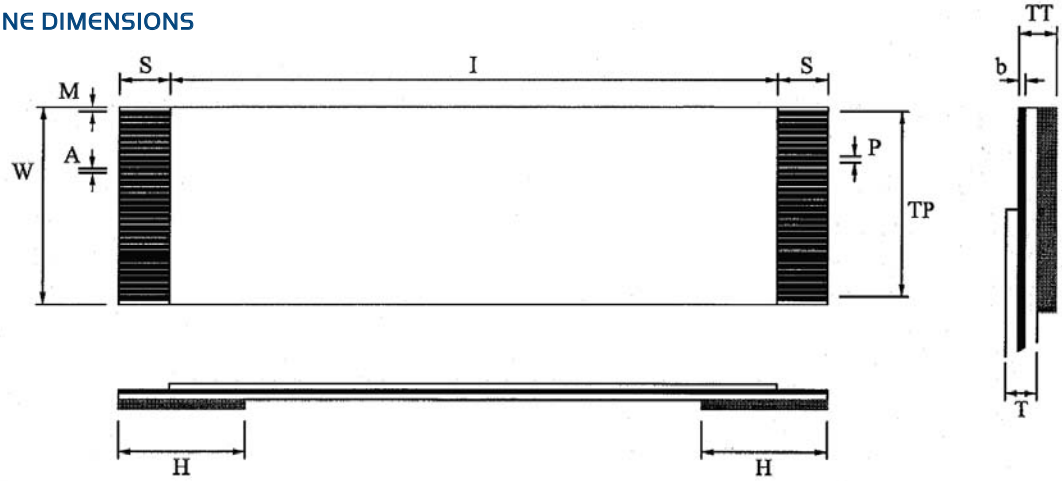

Item	Description	Specifications
N	Number of Conductors	10, 20, 26, 30, 40, 45, 50 and 60
P	Pitch in mm	0.5mm
TP	Total Pitch	P x (n-1)
W	Stiffener Width	P x (n +1)
T	Thickness of FFC	0.15mm
M	Margin Width	0.35mm
I	Insulation length	Total length minus 2 x S
S	Stripped Length	4.0mm
TT	Terminal Thickness	0.3mm
H	Supporting tape lenght	6.0mm
A	Conductor width	0.3 +0.05mm
b	Conductor thickness	0.035mm

SERIES HF601 90° ZIF CONNECTOR FLIP TYPE SMT (0.50MM PITCH)

SPECIFICATIONS

Insulation Resistance:	500MΩ min.
Contact Resistance:	50mΩ max.
Withstanding Voltage:	500V AC for 1 minute
Voltage Rating:	50V AC
Current Rating:	0.5A
Operating Temp. Range:	-40°C to +85°C
Mating Cycles:	20 times

PART NUMBER

HF601 - ** - 02

- Series No.
- Pin Counts: 10, 20, 30, 40, 45, 50 and 60
- Design No.

MATERIALS AND FINISH

Insulator:	LCP
Actuator:	PA9T
Contact:	Copper Alloy, Au over Ni

FEATURES

- Up to 700 Mbps transmission speed
- Flip type ZIF connector , SMT
- Super low profile, height = 2mm
- FFC/FPC with and without positioning part can be used
- Packaging tape and reel (1,200 pcs. per reel)

OUTLINE DIMENSIONS FOR 90° CONNECTOR

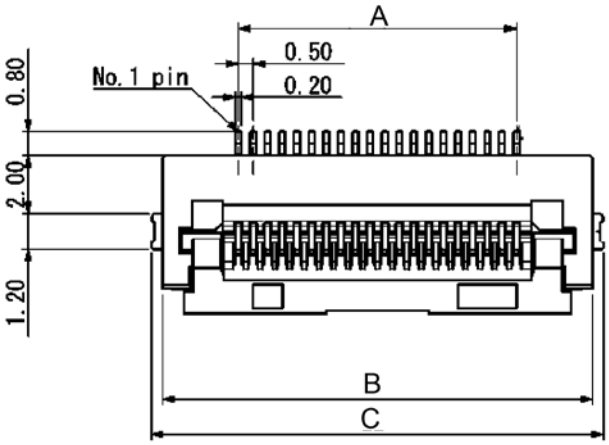

RECOMMENDED FFC/FPC

Application cable details please see page 97

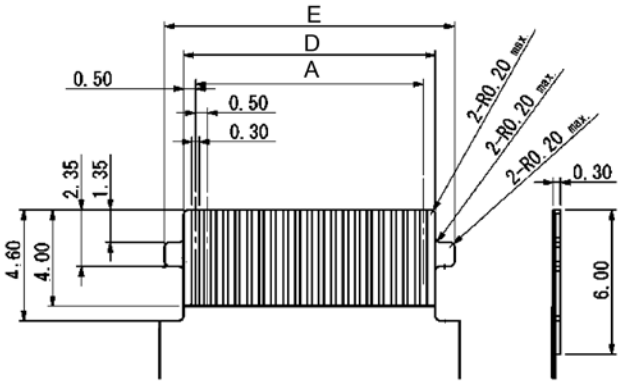

RECOMMENDED PCB LAYOUT

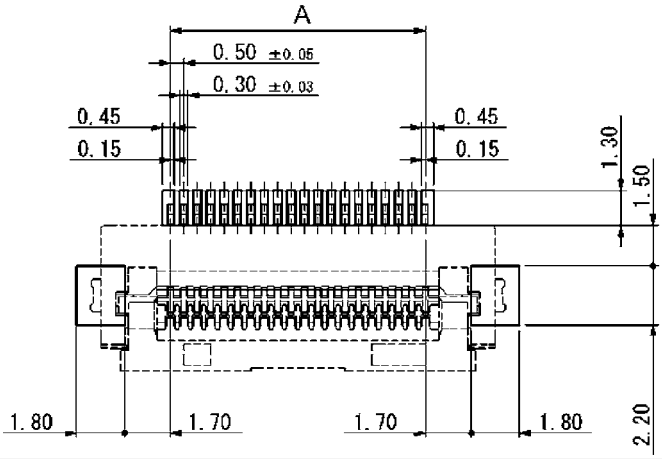

Part Number	Pin Count	A	B	C	D	E
HF601-10-02	10	4.50	9.70	10.50	5.50	7.10
HF601-20-02	20	9.50	14.70	15.50	10.50	12.10
HF601-26-02	26	12.50	17.70	18.50	13.50	15.10
HF601-30-02	30	14.50	19.70	20.50	15.50	17.10
HF601-40-02	40	19.50	24.70	25.50	20.50	22.10
HF601-45-02	45	22.00	27.20	28.00	23.00	24.60
HF601-50-02	50	24.50	29.70	30.50	25.50	27.10
HF601-60-02	60	29.50	34.70	35.50	30.50	32.10

SPECIFICATIONS

Insulation Resistance:	500MΩ min.
Contact Resistance:	50mΩ max.
Withstanding Voltage:	500V AC for 1 minute
Voltage Rating:	50V AC
Current Rating:	0.5A
Operating Temp. Range:	-40°C to +85°C
Mating Cycles:	20 times

PART NUMBER

HF601 - ** - 12

- Series No.
- Pin Counts: 30, 40, 45 and 50
- Design No.

MATERIALS AND FINISH

Insulator:	LCP
Actuator:	PA9T
Contact:	Copper Alloy, Au over Ni

FEATURES

- Flip type ZIF connector, SMT
- FFC/FPC with and without ears part can be used
- Up to1 Gbps tranfer rate
- Packaging tape and reel (1,000 pcs. per reel)

OUTLINE DIMENSIONS FOR 90° CONNECTOR

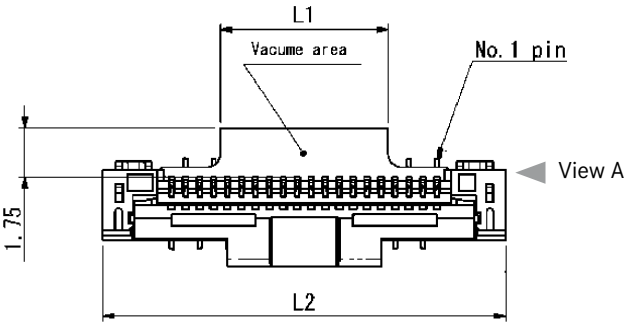

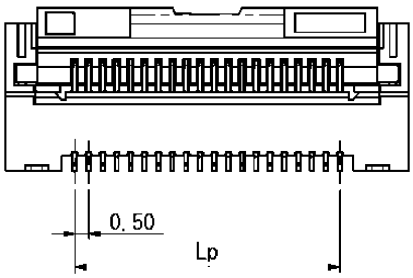

View A

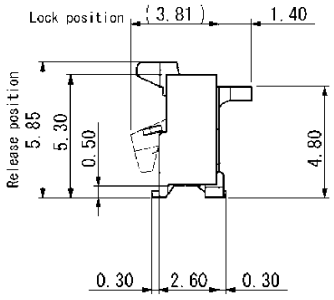

RECOMMENDED FFC/FPC

Application cable details please see page 97

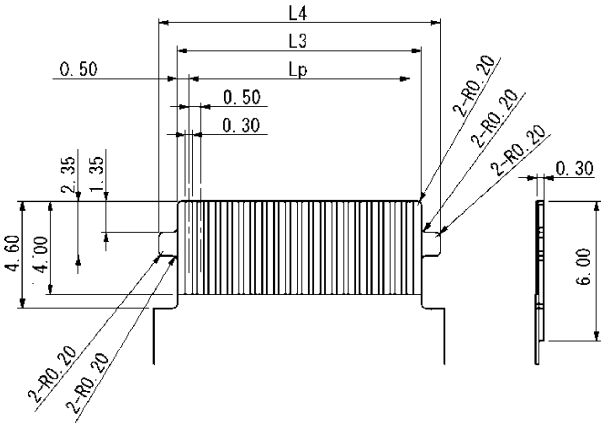

RECOMMENDED PCB LAYOUT

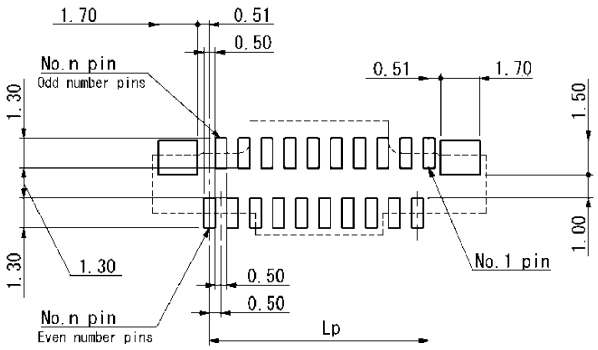

Part Number	Pin Count	Lp	L1	L2	L3	L4
HF601-30-12	30	14.50	8.00	19.44	15.50	17.10
HF601-40-12	40	19.50	8.00	24.44	20.50	22.10
HF601-45-12	45	22.00	8.00	26.94	23.00	24.60
HF601-50-12	50	24.50	8.00	29.44	25.50	27.10

SPECIFICATIONS

Insulation Resistance:	500MΩ min.
Contact Resistance:	50mΩ max.
Withstanding Voltage:	500V AC for 1 minute
Voltage Rating:	50V AC
Current Rating:	0.5A
Operating Temp. Range:	-40°C to +85°C
Mating Cycles:	20 times

PART NUMBER

HF601 - 22 - 03

- Series No.
- Pin Count
- Design No.

MATERIALS AND FINISH

Insulator:	LCP
Actuator:	PA9T
Contact:	Copper Alloy, Au over Ni

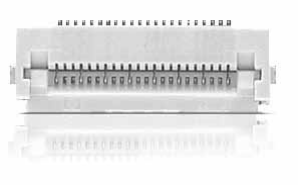

FEATURES

- Application for SATA and HDMI
- Flip type ZIF connector, SMT
- Transmission speed up to 5Gbps
- Super low profile, height = 2mm
- FFC/FPC with and without positioning part can be used
- Packaging tape and reel (2,000 pcs. per reel)
- Can also be used with Yflex cable (see page 94)

OUTLINE DIMENSIONS CONNECTOR

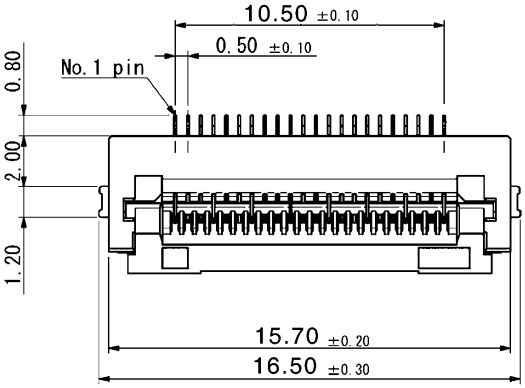

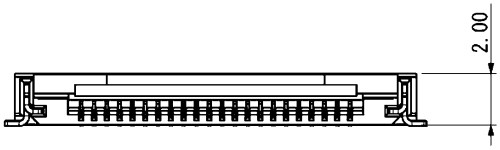

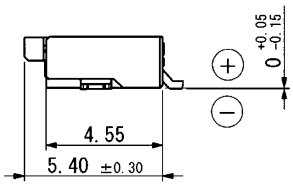

RECOMMENDED FFC/FPC

Application cable details please see page 97

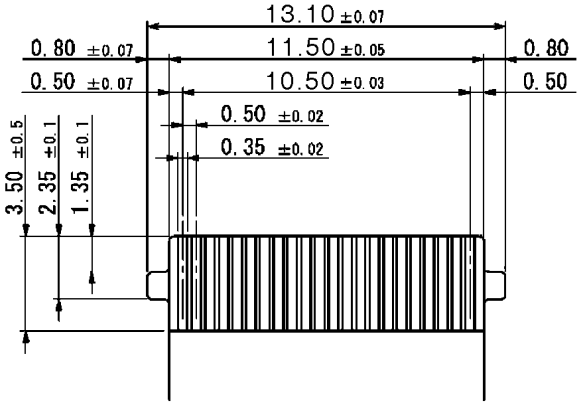

RECOMMENDED PCB LAYOUT

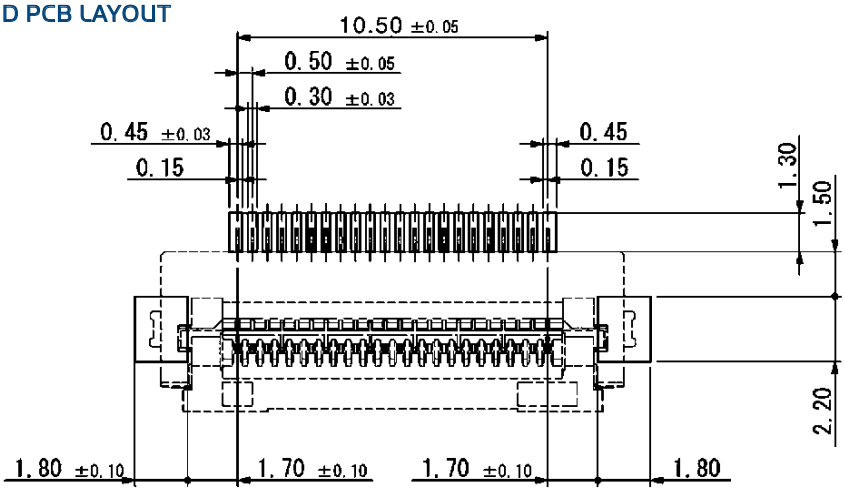

SPECIFICATIONS

Insulation Resistance:	1,00MΩ
Conductor Resistance:	2.2 Ω / meter
Withstanding Voltage:	500V AC rms for 1 minute
Voltage Rating:	60V (UL20706)
Operating Temp. Range:	-40°C to +105°C (UL20706)

MATERIALS AND FINISH

Conductor:	Au plated Cu
Insulation Tape:	Polyester, white
Supporting Tape:	Polyester, blue

FEATURES

- Matches with HF601-22-03 Flip type
- 100Ω diferential impedance
- Minimum order quantity may occur

PART NUMBER

HF601 - F5 - 22 - *** - * * - F - * *

- Series No.
- Pitch: 0.5mm
- Pin Counts: 22
- Insulation Length in mm
  Total length – 7mm (2 x stripped lenght)
- Direction of Supporting Tape
  A = same B = opposite
- 0 = No ears
  1 = Ear one side
  2 = Ears both sides
- Plating: F = Au
- Shielding: O = One side only D = Double sided
- S = UL 2896
  V = UL20706/20861

OUTLINE DIMENSIONS

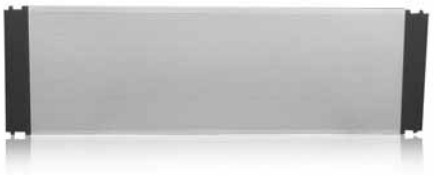

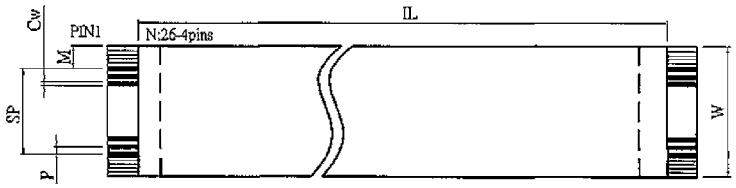

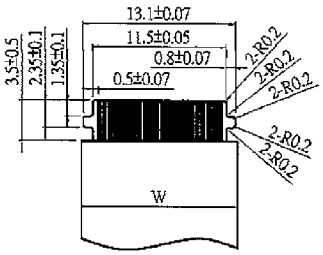

Double side shielded

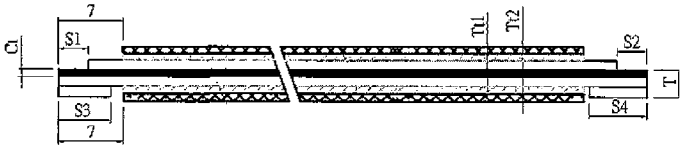

Single side shielded

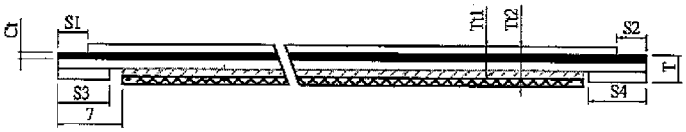

Item	Description	Specifications (Double sided)	Specifications (Single sided)
N	Number of Conductors	22	22
P	Pitch in mm	0.5mm	0.5mm
SP	Total Pitch	10.5mm	10.5mm
W	Total Width	13.5mm	13.5mm
T	Terminal Thickness	0.3mm	0.3mm
M	Margin Width	1.5mm	1.5mm
IL	Insulation length	= Total length minus 7mm	= Total length minus 7mm
TL	Total length	Customer defined	Customer defined
S1 / S2	Stripped Length	3.5mm	3.5mm
S3 / S4	Supporting tape lenght	6.0mm	6.0mm
T1 /T2	Cable Thickness	0.015/0.39mm	0.015/0.39mm
Cw	Conductor width	0.3mm	0.3mm
Ct	Conductor thickness	0.35mm	0.35mm

SPECIFICATIONS

Insulation Resistance:	500MΩ min.
Contact Resistance:	50mΩ max.
Withstanding Voltage:	500V AC for 1 minute
Voltage Rating:	50V AC
Current Rating:	0.5A
Operating Temp. Range:	-40°C to +85°C
Mating Cycles:	20 times

PART NUMBER

HF509 - 10 - 03

- Series No.
- Pin Count
- Design No.

MATERIALS AND FINISH

Insulator:	LCP
Actuator:	PA9T
Contact:	Copper Alloy, Au over Ni

FEATURES

- For IEEE1394, LVDS, TMDS, S-ATA, PCI-Express applications
- Impedance matching design
- Non-ZIF type with function to avoid mis-operation such as cable being diagonally inserted or cable coming off
- Application cable Yflex with adapter (please see page 94)
- EMI reinforced design with connecting between metal shell of adapter and metal shell of receptacle

OUTLINE DIMENSIONS CONNECTOR

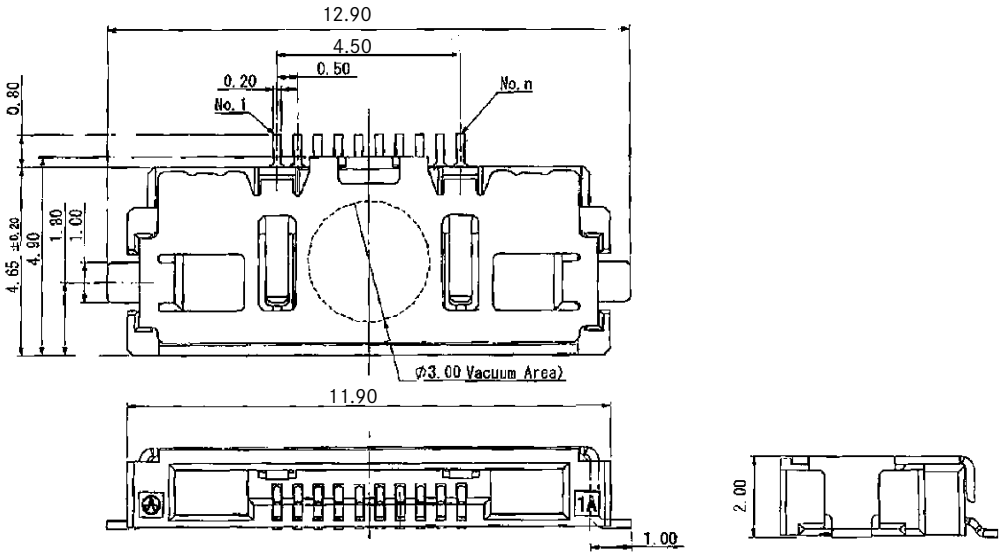

RECOMMENDED PCB LAYOUT

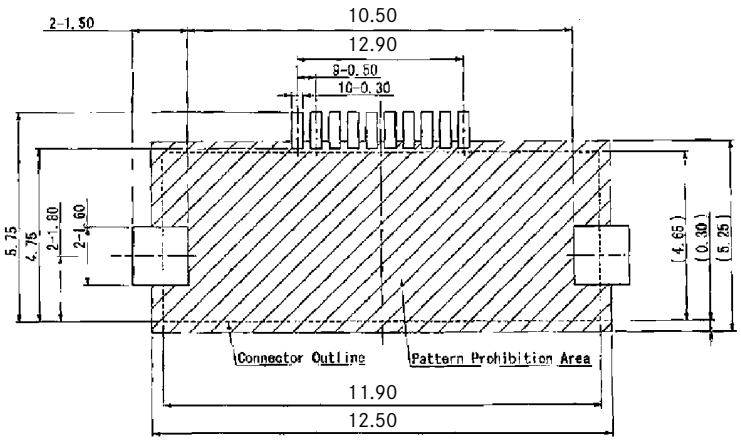

SPECIFICATIONS

Insulation Resistance:	100MΩ min. at 500V DC
Contact Resistance:	50mΩ max. at 10mA / 20mV
Voltage Rating:	500Vrms AC
Current Rating:	1A
Operating Temp. Range:	-40°C to +85°C
Characteristic Impedance:	50Ω
V.S.W.R.:	1.5 average value (2.5GHz)
Mating Cycles:	200 times

PART NUMBER

HF201P - 000 *

- Series No.
- Design No.
- Number of Plugs: 1 = Single Plug, 2 = Double Plug

MATERIALS AND FINISH

Inner contact:	Copper Alloy , Sn
Outer contact:	Copper Alloy , Sn
Fixed metal:	Copper Alloy , Sn
Insulator A:	Black heat resisting plastic
Insulator B:	White heat resisting plastic

FEATURES

- Excellent high-frequency performance
- Reducing reflection and transmission lost
- Downsized outline
- Lock mechanism enduring vibration and strain
- SMT mounting (PCB mounting type)
- Crimp method enabling easy assembly (crimp tool available on request)
- Tray packaging

APPLICATIONS

- In-car communication
- Car sensors
- Automotive audio systems
- Antenna systems

OUTLINE DIMENSIONS

HF201P-0001

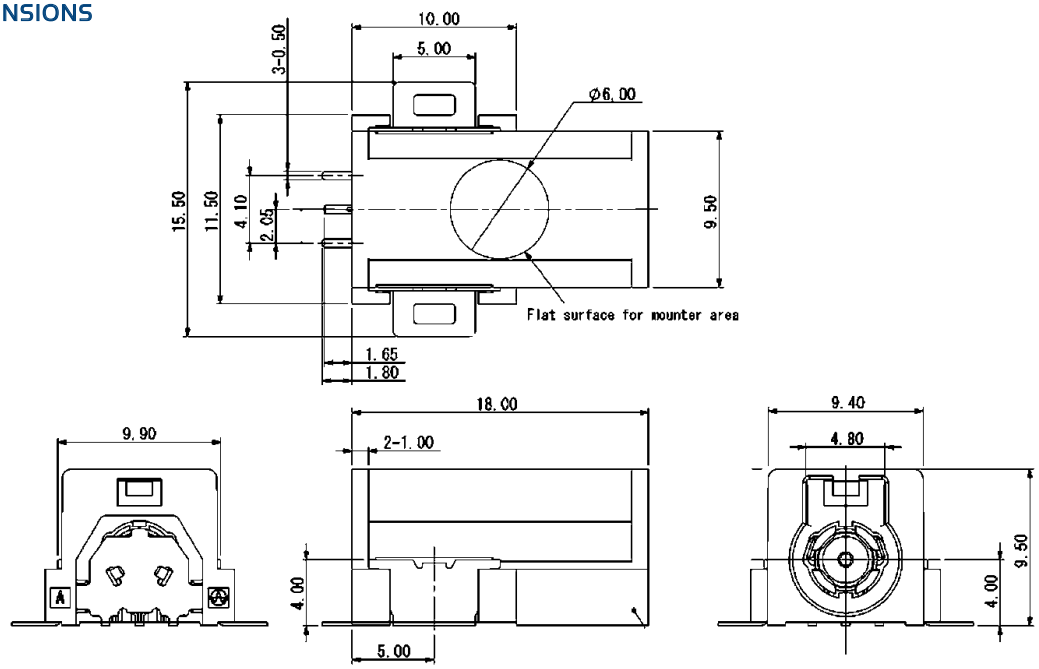

PCB LAYOUT

HF201P-0001

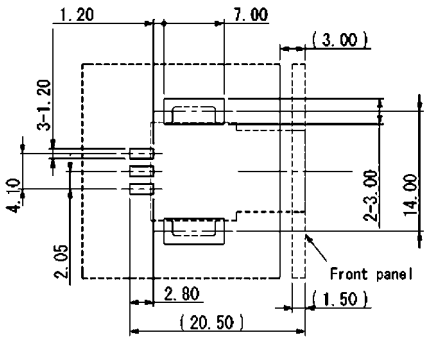

OUTLINE DIMENSIONS

HF201P-0002

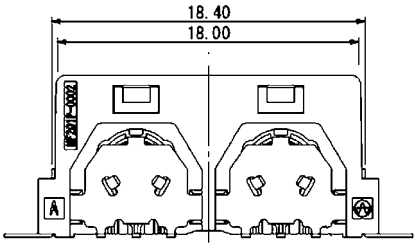

SPECIFICATIONS

Insulation Resistance:	100MΩ min. at 500V DC
Contact Resistance:	50mΩ max. at 10mA / 20mV
Voltage Rating:	500Vrms AC
Current Rating:	1A
Operating Temp. Range:	-40°C to +85°C
Characteristic Impedance:	50Ω
V.S.W.R.:	1.5 average value (2.5GHz)
Mating Cycles:	200 times

MATERIALS AND FINISH

Inner contact:	Copper Alloy, Sn
Outer contact:	Copper Alloy, Sn
Fixed metal:	Copper Alloy, Sn
Insulator A:	Black heat resisting plastic
Insulator B:	White heat resisting plastic

FEATURES

- The cable socket system consists of a housing and an insulator, with inner and outer contacts
- Tools are available on request

PART NUMBER

HF201S - 01 **

- Series No.
- Design No.
- MO = Housing
  IN = Insulator

PART NUMBER (CONTACT)

HF201 - CT386* - T *

- Series No.
- CT3868 = Inner Contact
  CT3869 = Outer Contact
- 1 = Cable = 1.0mm diameter
  2 = Cable = 1.5mm diameter

OUTLINE DIMENSIONS

HF201S-01MO

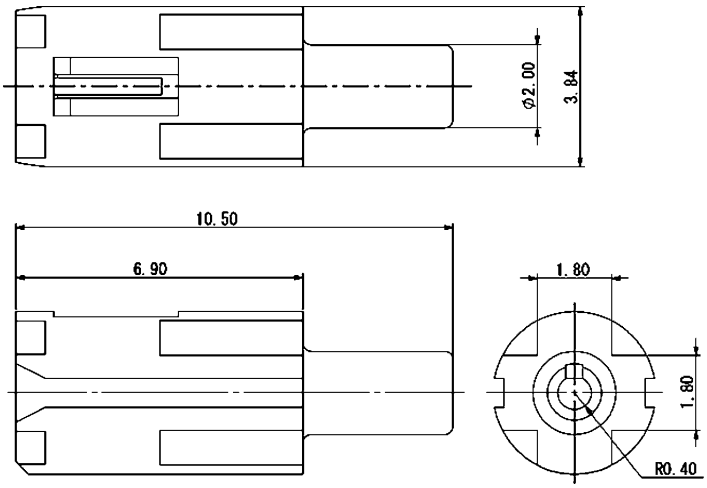

CONTACT DETAILS

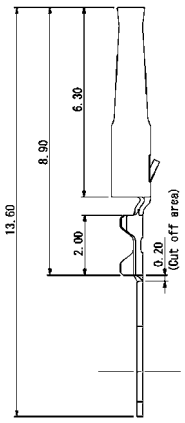

HF201S-CT3868-T1

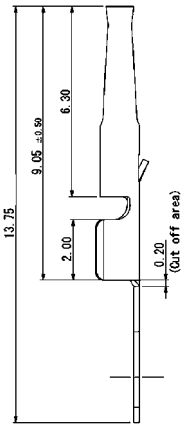

HF201S-CT3868-T2

OUTLINE DIMENSIONS

HF201S-01IN

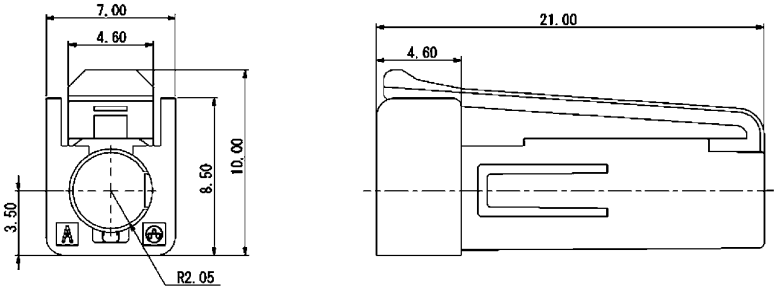

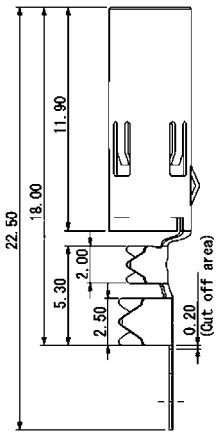

HF201S-CT3869-T1

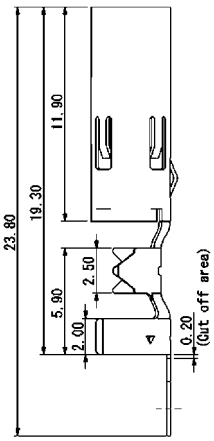

HF201S-CT3869-T2

FEATURES

- CFP Multi Source Agreement (MSA) compliant
- For optical modules with 40Gbps & 100Gbps
- 10 Gbps/channel
- Riding heat-sink ensures efficient thermal dissipation
- Gasket installed host connector cover and Bracket to ensure EMI shielding performance
- Pin count: 148
- Mating cycles: 200 times

CFP MECHANICAL UNIT

Part Number	Yamaichi Parts	Description and Notes
CA009-1201-001		Guide Rails rail x 1pc, no screws attached, requires 2 x M3, L10mm per rail
CA009-1203-001		External Bracket Assembly 4 x 2-56 UNC screws attached
CA009-1204-001		Backer Plate Assembly
CA009-1400-001		Host Connector Cover no screws attached, requires 2 x M3, L10mm
CA009-1310-001		Heat Sink Assembly MSA Standard size without thermal interposer 4 x M3 screws installed
CA009-1300-002		Heat Sink Assembly Long Size with thermal interposer 4 x M3 screws installed

CFP CONNECTOR AND PLUG

Part Number	Yamaichi Parts	Description and Notes
CA009-S001-001		Host Connector Surface Mount Type
CA009-P001-001		Plug Connector Straddle Mount Type

SPECIFICATIONS

Insulation Resistance:	1,000MΩ min
Current Rating:	0.5A
Voltage Rating:	120V AC
Contact Resistance:	10mΩ max.
Withstanding Voltage:	DC300V 1 min.
Operating Temp. Range:	−55°C to +85°C
Insertion / Extraction:	0.76μm Au 250 times
	0.38μm Au 25 times

PART NUMBER

CN120 - 038 - 000 - *

- Series
- No. of Contacts
- Design Number
- Contact Plating 1 = 0.76μm Au, 2 = 0.38μm Au

MATERIALS

Insulator:	LCP, PPS
Contact:	Copper Alloy, Plating Ni-Au

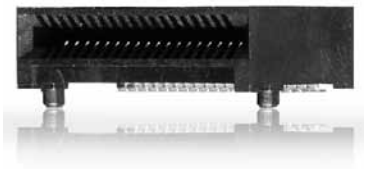

FEATURES

- QSFP Multi-Source Agreement (MSA) compliant
- Transmission characteristics: 32Gbps / ch, 4ch=128Gbps / connector
- Compatible with existing QSFP (Infiniband: QDR / FDR / EDR) module
- Fully compatible foot pattern with existing QSFP connector
- Contact area planting variation: 1, Au 0.76μm min 2, Au0.38μ min
- Lead-free soldering capable
- Tape and Reel packaging
- RoHS compliant

OUTLINE CONNECTOR DIMENSIONS

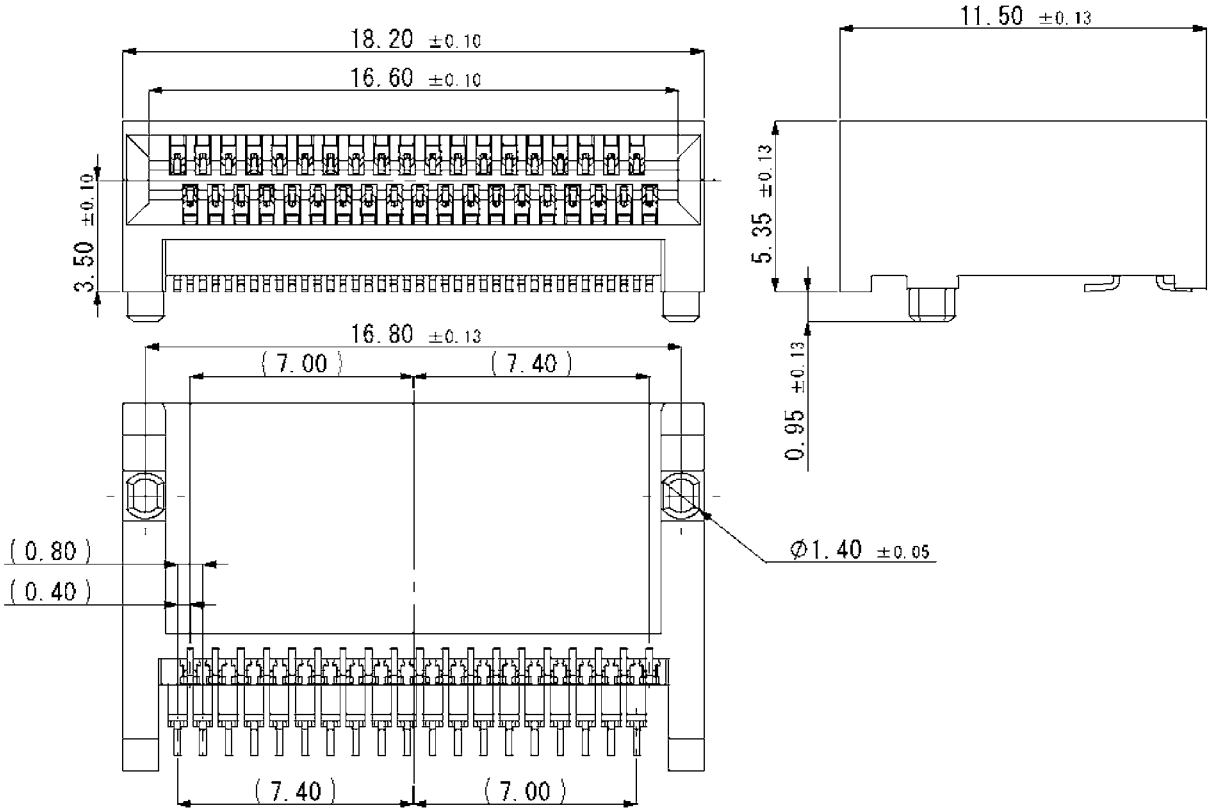

INTERNAL CONNECTORS

BEC CONNECTOR FOR MXM1.0 / QSEVEN MODULE CARDS 110
SERIES BEC

Y-LOCK PULLFORCE CONNECTOR / CABLE SYSTEM 112
1.00 AND 0.50MM PITCH CONNECTORS/CABLE
SERIES Y-LPF-C, Y-LPF-F

ZIF CONNECTORS FOR FPC / FFC 117
1.00 AND 0.50MM PITCH CONNECTORS/CABLE
SERIES FPC, FC-P

BOARD-TO-BOARD AND BOARD-TO-CABLE 122
2.54MM PITCH CONNECTORS
SERIES FAP, FAS, FGP, UFS, FP, FS

2.00MM PITCH CONNECTORS 140
SERIES ZJ, ZP, ZS

1.27MM PITCH CONNECTORS 154
SERIES NP, NS, MATCHCON, NF, ND

0.50MM PITCH CONNECTORS 179
SERIES RD,

POWER CONNECTORS 181
BOARDFIT 3.0 AND BOARDFIT 4.2
SERIES P3, P4

BOARD EDGE CONNECTOR WITH 230 PINS FOR MXM 1.0 / QSEVEN MODULE CARDS

The BEC Series for applications with requirements especially for the Automotive Industry.
This connector is able to fulfill tough specifications such as vibration, shock and temperature range.

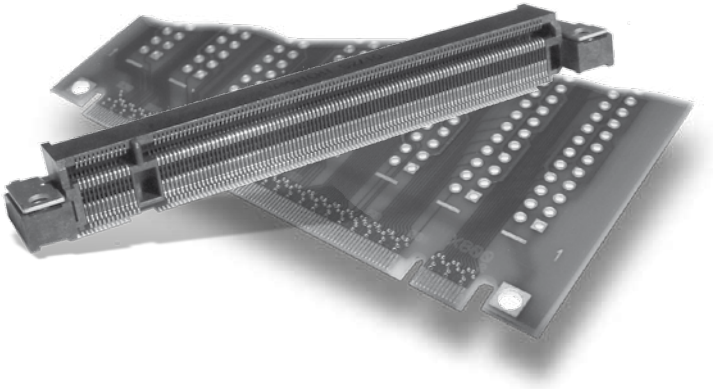

SPECIAL FEATURES

Mechanical Stability

- Connector ensures good contact in applications with vibrations because of the contact shape and form of insulator
- Improved mechanical stability due to enlarged SMT tabs
- Additional fixation of module card in the connector is possible

Tolerance Compensation

- The contact design can compensate tolerances of the module fixation angle and the PCB regardless of thickness within specified dimensions

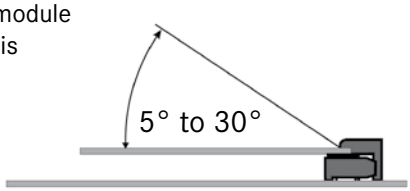

Module fixation angle

Further Improvements

- Improved EMI protection with additional ground connection
- PCB chamfer on mating area recommended, but not obligatory
- Automatic assembly of module card is possible
- Mating area compatible with Qseven and MXM 1.0 standard cards

General Specifications

- Number of pins: 230 pins
- Contact type: SMT
- Height: 7.8 mm
- Contact plating:
  - 3 variations possible
  - mating area - Au Flash, 15µ" and 30µ" Au
  - solder area - Au Flash

OUR PRODUCT RANGE ALSO INCLUDES A TEST CONTACTOR SYSTEM FOR EMBEDDED MODULES

Yamaichi Electronics Test Contactor System for embedded modules is a reliable and robust contacting solution.

The impedance controlled system for programming and testing follows the QSEVEN Standard or customized pinout.

SPECIFICATIONS

Insulation Resistance:	250MΩ at 500V DC
Withstanding Voltage:	500V ACrms for 1 minute
Contact Resistance:	40mΩ max.
Current Rating:	0.5A
Voltage Rating:	50V DC
Operating Temp. Range:	-40°C to +85°C
Mating Cycles:	30 times

MATERIALS AND FINISH

Insulator:	LCP
Contacts:	Phosphor Bronze
Contact Plating:	Mating Area - Au Flash over Ni - 15µ" Au over Ni - 30µ" Au over Ni
	Solder Area - Au Flash over Ni
SMT Tabs:	Brass
SMT Plating:	Nickel, Solder Tails Tin

FEATURES

- Contacts designed to follow and balance the PCB regardless of the thickness (within tolerance)
- Fixation designed to offer mechanical stability
- Improved EMI connection with additional ground connection
- PCB chamfer on mating area could be omitted
- Mating area compatible with Qseven and MXM 1.0 standard cards

PART NUMBER

BEC - 0.5 - 230 - S9 - *F - R - EDC

- Series
- Pitch: 0.50mm
- Pin Count: 230
- Orientation: 90°
- Contact Area Plating*
  FF = Gold Flash
  BF = 15µ" Au
  AF = 30µ" Au
- Tape and Reel (300pcs. per reel)
- Design No. (internal)

OUTLINE DIMENSIONS

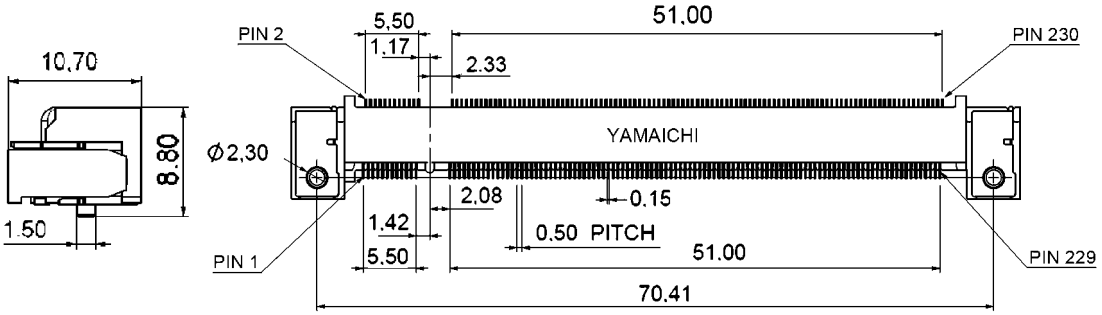

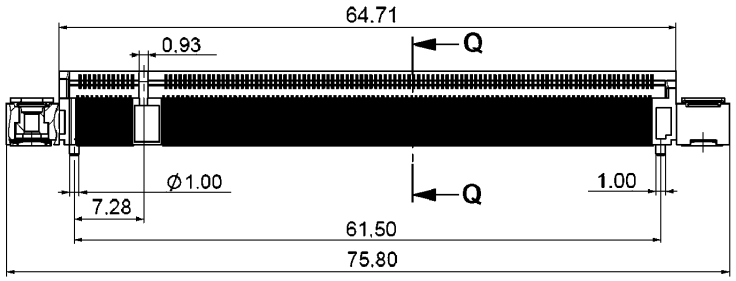

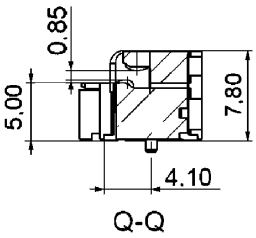

RECOMENDED PCB LAYOUT

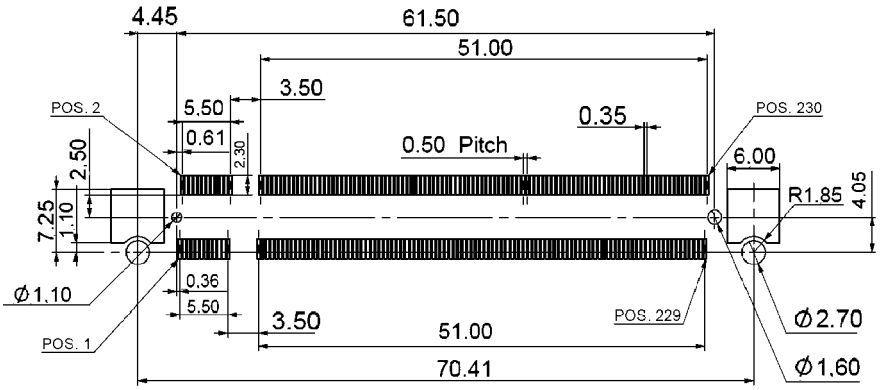

INTRODUCTION

Developments of new products in the current market situation require good performance and use of the technical complexity and space available, especially when it comes down to efficiency!

Efficiency means the achievement of a full range of functions on the smallest of available space.
With our Y-Lock® Pullforce connector system we realise these requirements.

Because Y-Lock® Pullforce fulfills the need for a smart technology, space-saving design and the reduction of handling costs in different areas

APPLICATIONS:

Due to the special design features the Y-Lock Pullforce fulfils the highest requirements and can be used in applications which have a need for very high demands.

- Automotive systems
- Lightning systems
- Industrial Process Systems
- Medical equipments

ADVANTAGES:

New design for an easy, quick and secure assembly for a Board-to-cable solution "One-push lock" system

Standard FFC/FPC with supporting tape.
Optional use of an additional stiffener

- Pitches: 0.5 and 1.0mm
- 90° and 180° versions
- Various pin counts available
- Non-ZIF system
- Automatic assembly is possible

FUNCTIONALITY OF LOCKING MECHANISM:

Lock mechanism by use of small hooks at the board connector

The hooks lock the FFC/FPC behind the supporting tape

Use of standard FFC/FPC under compliance with tolerances:
- Supporting Tape: 4.5mm +/- 0.5mm (0.5mm pitch)
  4.5mm +/- 0.8mm (1.0mm pitch)
- Stripped length: 3.0mm +/- 0.5mm

OPTIONAL USE OF AN ADDITIONAL STIFFENER

The design of the additional stiffener avoids wrong insertion

Optimized security during the plugging, e.g. against strong vibrations

Yamaichi Electronics offers the complete assembly of the FFC/FPC with the additional stiffener

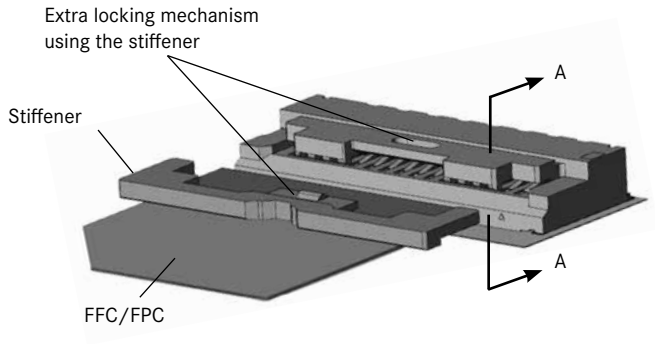

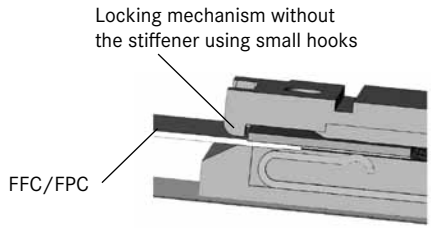

Section A - A

SPECIFICATIONS

Insulation Resistance:	1,000MΩ min. at 100V DC
Withstanding Voltage:	250V ACrms for 1 minute
Contact Resistance:	30mΩ max. at 10mA
Current Rating:	0.5A
Voltage Rating:	50V DC
Operating Temp. Range:	-40°C to +105°C
Mating Cycles:	10 times minimum

MATERIALS AND FINISH

Housing:	LCP
Contacts:	Phosphor Bronze
Plating:	Au Flash or Tin

FEATURES

- non-ZIF connector
- Can be used with standard FFC/FPC
- One push lock system

PART NUMBER

Y-LPF - C 5 - 30 - S * - BF - R

- Series No.
- Connector
- Pitch: 5 = 0.50mm
- Pin Count: 30 (only) [1]
- Terminal Style: S = SMT
- Orientation: 1 = 180° 9 = 90°
- Plating: Mating / Termination Area BF = 0.3µm Au / Flash Au
- Tape and Reel (180° version with Pick & Place Cap)

[1] Other Pin counts available on request

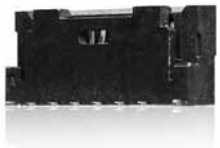

For matching cable see page 102

OUTLINE DIMENSIONS

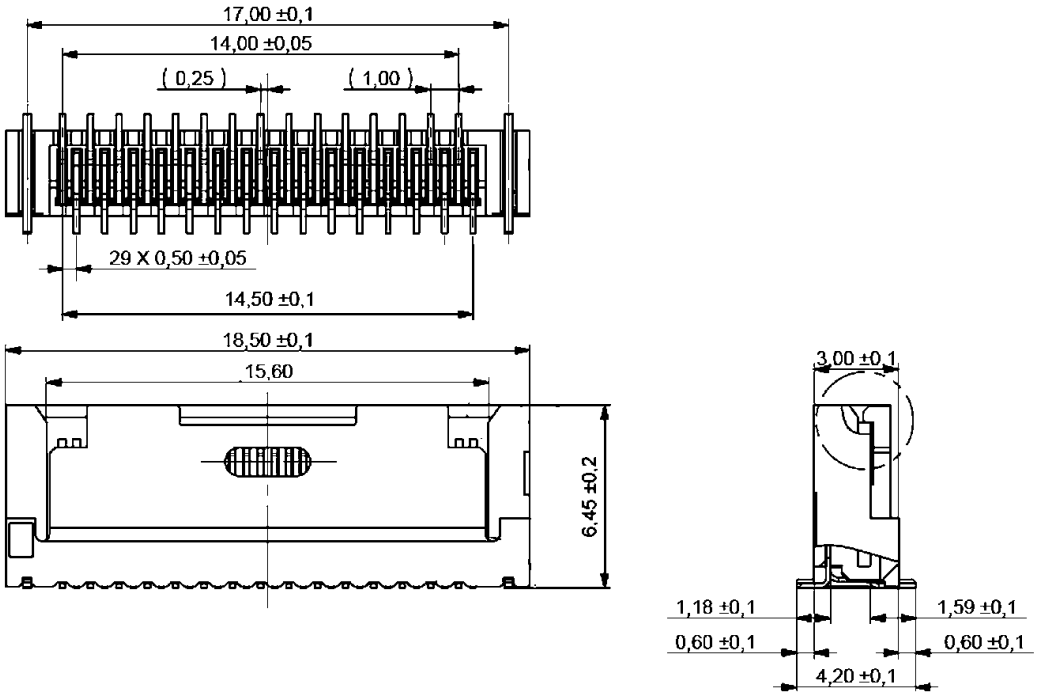

PCB LAYOUT

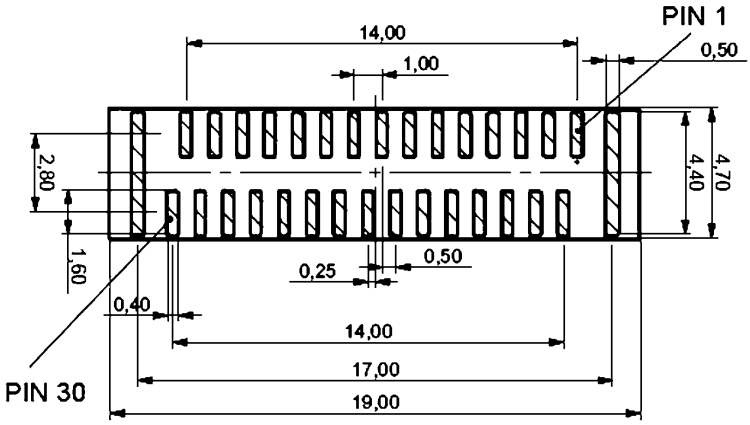

SPECIFICATIONS

Insulation Resistance:	1,000MΩ min. at 100V DC
Withstanding Voltage:	500V ACrms for 1 minute
Contact Resistance:	20mΩ max. at 10mA
Current Rating:	1A
Voltage Rating:	125V DC
Operating Temp. Range:	-40°C to +105°C
Mating Cycles:	10 times minimum

MATERIALS AND FINISH

Housing:	LCP
Contacts:	Phosphor Bronze
Plating:	Au Flash or Tin

FEATURES

- non-ZIF connector
- Can be used with standard FFC/FPC
- One push lock system

PART NUMBER

Y-LPF - C 1 - 12 - S 1 - ** - R

- Series No.
- Connector
- Pitch: 1 = 1.00mm
- Pin Count: 12 to 30
- Terminal Style: S = SMT
- Orientation: 1 = 180°
- Plating: Mating / Termination Area
  BF = 0.3µm Au / Flash Au
  LL = Tin / Tin
- Tape and Reel with Pick & Place Cap

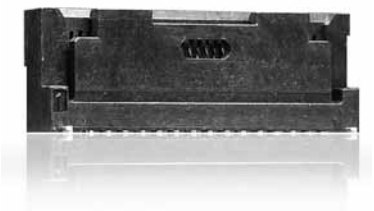

For matching cable see pages 116 and 117

OUTLINE DIMENSIONS 180° CONNECTOR

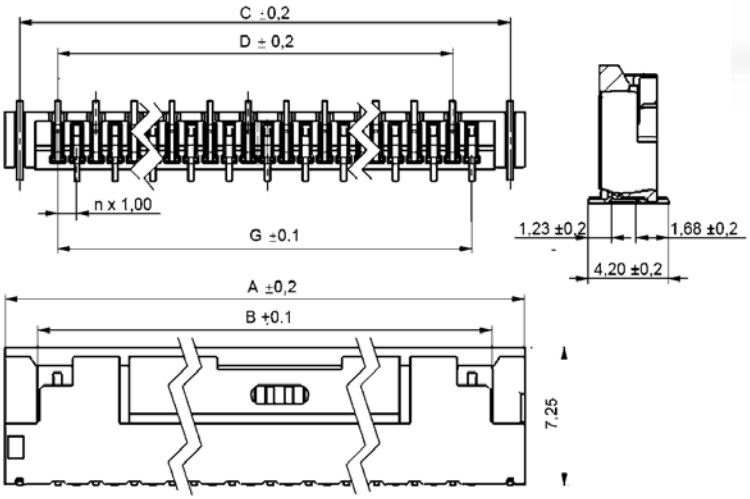

PCB LAYOUT

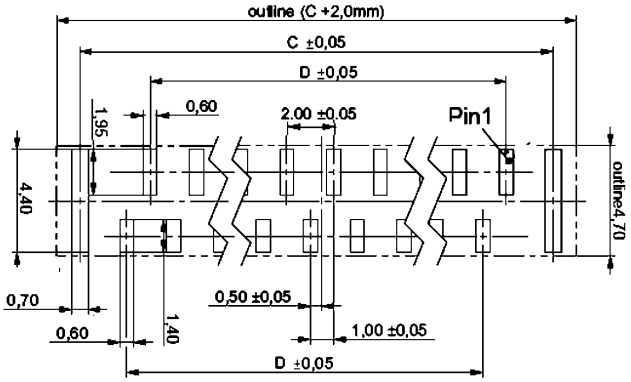

Part Number	Pin Count	A	B	C	D	G
Y-LPF-C1-12-S1-**-R	12	16.50	13.10	15.00	10.00	11.00
Y-LPF-C1-14-S1-**-R	14	18.50	15.10	17.00	12.00	13.00
Y-LPF-C1-16-S1-**-R	16	20.50	17.10	19.00	14.00	15.00
Y-LPF-C1-18-S1-**-R	18	22.50	19.10	21.00	16.00	17.00
Y-LPF-C1-20-S1-**-R	20	24.50	21.10	23.00	18.00	19.00
Y-LPF-C1-22-S1-**-R	22	26.50	23.10	25.00	20.00	21.00
Y-LPF-C1-24-S1-**-R	24	28.50	25.10	27.00	22.00	23.00
Y-LPF-C1-26-S1-**-R	26	30.50	27.10	29.00	24.00	25.00
Y-LPF-C1-28-S1-**-R	28	32.50	29.10	31.00	26.00	27.00
Y-LPF-C1-30-S1-**-R	30	34.50	31.10	33.00	28.00	29.00

SPECIFICATIONS

Insulation Resistance:	1,000MΩ min. at 100V DC
Withstanding Voltage:	500V ACrms for 1 minute
Contact Resistance:	20mΩ max. at 10mA
Current Rating:	1A
Voltage Rating:	125V DC
Operating Temp. Range:	-40°C to +105°C
Mating Cycles:	10 times minimum

MATERIALS AND FINISH

Housing:	LCP
Contacts:	Phosphor Bronze
Plating:	Au Flash or Tin

FEATURES

- non-ZIF connector
- Can be used with standard FFC/FPC
- One push lock system

PART NUMBER

Y-LPF - C 1 - 12 - S 9 - ** - R

- Series No.
- Connector
- Pitch: 1 = 1.00mm
- Pin Count: 12 to 30
- Terminal Style: S = SMT
- Orientation: 9 = 90°
- Plating: Mating / Termination Area
  BF = 0.3µm Au / Flash Au
  LL = Tin / Tin
- Tape and Reel

For matching cable see pages 116 and 117

OUTLINE DIMENSIONS 90° CONNECTOR

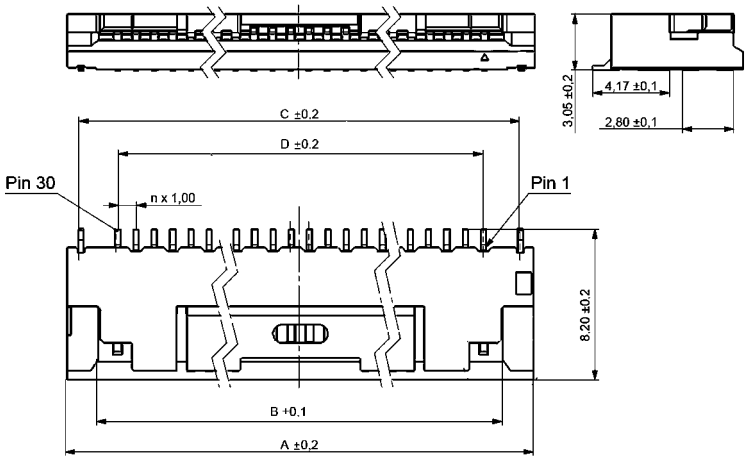

PCB LAYOUT

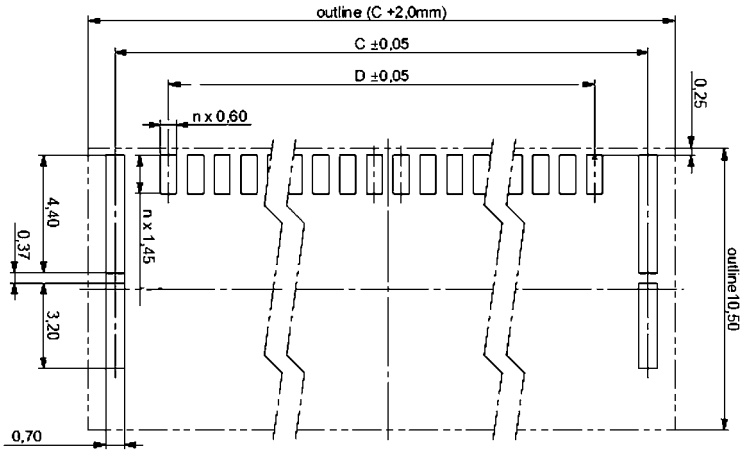

Part Number	Pin Count	A	B	C	D
Y-LPF-C1-12-S9-**-R	12	16.50	13.10	15.00	10.00
Y-LPF-C1-14-S9-**-R	14	18.50	15.10	17.00	12.00
Y-LPF-C1-16-S9-**-R	16	20.50	17.10	19.00	14.00
Y-LPF-C1-18-S9-**-R	18	22.50	19.10	21.00	16.00
Y-LPF-C1-20-S9-**-R	20	24.50	21.10	23.00	18.00
Y-LPF-C1-22-S9-**-R	22	26.50	23.10	25.00	20.00
Y-LPF-C1-24-S9-**-R	24	28.50	25.10	27.00	22.00
Y-LPF-C1-26-S9-**-R	26	30.50	27.10	29.00	24.00
Y-LPF-C1-28-S9-**-R	28	32.50	29.10	31.00	26.00
Y-LPF-C1-30-S9-**-R	30	34.50	31.10	33.00	28.00

SPECIFICATIONS

Insulation Resistance:	1,000MΩ min. at 500V DC
Conductor Resistance:	F1 max. 0.85 Ω/m
	F5 max. 2.20Ω /m
Withstanding Voltage:	500V AC rms for 1 minute
Voltage Rating:	30V (UL2896) or 60V (UL20861)
Operating Temp. Range:	-40°C to +80°C (UL2896)
	-40°C to +105°C (UL20861)

MATERIALS AND FINISH

Conductor:	Tin Plated Cu
Insulation:	Polyester, white
Stiffener:	Polyester, blue

FEATURES

- UL2896 or UL20861 available
- Number of Conductors with 1.00mm pitch = 12 - 30
- Number of Conductors with 0.50mm pitch = 30 only
- Minimum order quantity = 2,000 pcs.
- Samples available on request

PART NUMBER

Y-LPF - F * -12 - * - A 1 - B - *

- Series No.
- F = FFC
- Pitch: 1 =1.00mm, 5 = 0.5mm
- Pin Counts:
  for 1.00mm: 12, 14, 16, 18, 20, 22, 24, 26, 28 and 30
  for 0.5mm: 30 only
- Insulation Length in mm:
  (Complete length minus 6mm)
- Direction of Supporting Tape:
  A = Same Side B = Opposite Side
- Additional Stiffener:
  0 = No stiffener 1 = One side 2 = Both sides
- Plating Area: B = 0.3µm Au L = Tin
- UL No.: S = UL2896 V = UL20861

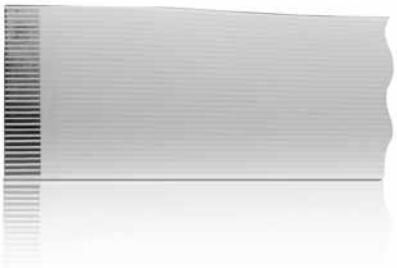

OUTLINE DIMENSIONS

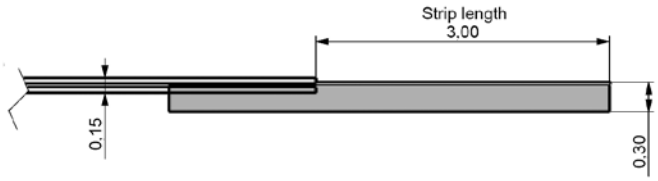

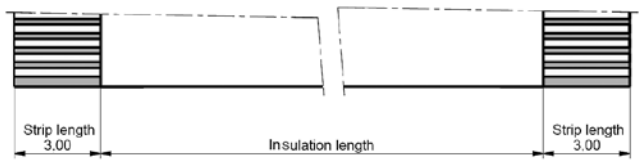

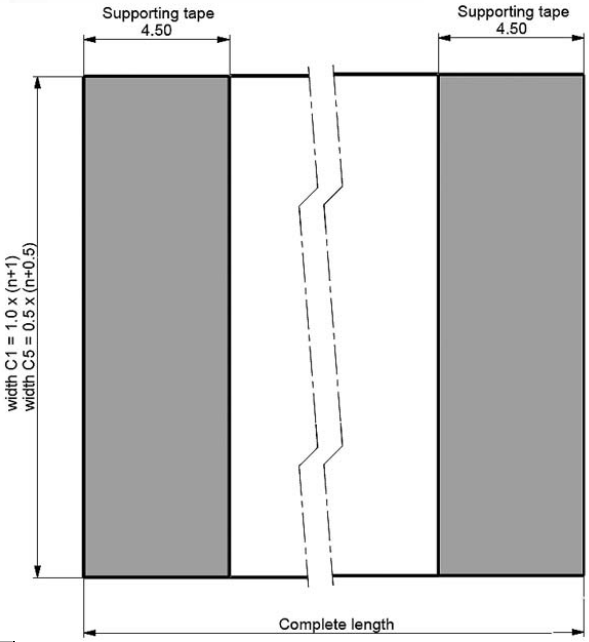

CABLE STYLES

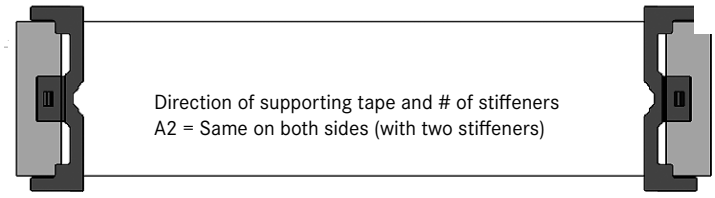

Direction of supporting tape and # of stiffeners
A2 = Same on both sides (with two stiffeners)

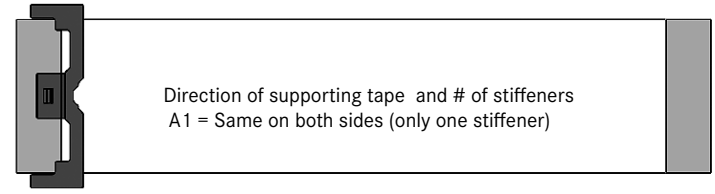

Direction of supporting tape and # of stiffeners
A1 = Same on both sides (only one stiffener)

SPECIFICATIONS

Insulation Resistance: 1,000MΩ min. at 500V DC
Conductor Resistance: C1 max. 0.63 Ω/m
C6 max. 1.826Ω /m
Withstanding Voltage: 500V AC rms for 1 minute
Voltage Rating: 30V (UL2896) or 60V (UL20706)
Operating Temp. Range: -40°C to +80°C (UL2896)
-40°C to +105°C (UL20706)

MATERIALS AND FINISH

Conductor: Tin Plated Cu or Au Flash Plated
Insulation: Polyester, white
Stiffener: Polyester, blue

FEATURES

- UL2896 or UL20706 available
- Number of Conductors with 0.50mm pitch = 8 to 200
- Number of Conductors with 1.00mm pitch = 4 to 100
- Shielded version available on request

PART NUMBER

FC - P0.5 - C* - 21 - 32 - A - 4 - L - *

- Series No.
- Pitch: P0.5 = 0.5mm P1.0 = 1.0mm
- Conductor Cross-sec. (Thickness x Width). C1 = 0.05 x 0.65mm (P= 1.00mm) C6 = 0.035 x 0.3mm (P= 0.50mm)
- Number of Conductors
- Insulation Length in mm (= Complete length minus 2 x strip length)
- Cable Type / Styles (see drawing below)
- Length of Stripped Conductor in mm (dimension S)
- Plating: L = Tin C = Au Flash
- UL Styles: No Mark = UL2896 V = UL20706

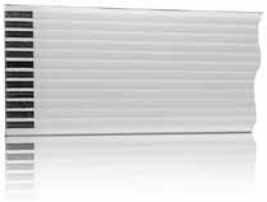

OUTLINE DIMENSIONS

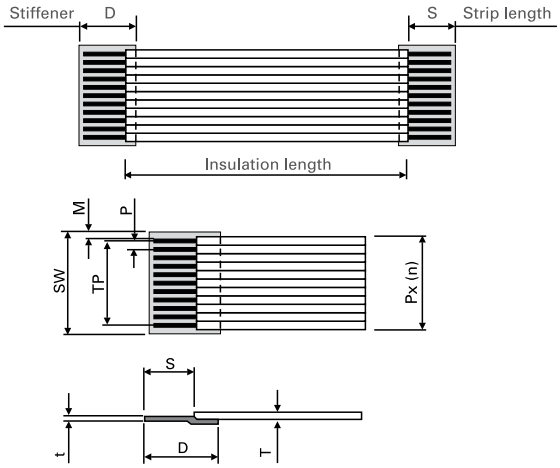

Item	Description	Specification
N	Number of Conductors	
P	Pitch in mm	0.5mm and 1.0mm
TP	Total Pitch	P x (n-1)
SW	Stiffener Width	P x (n+1)
M	Margin Width	C1 = 0.7mm C5 = 0.35mm
T	Thickness of FFC	C1 = 0.14mm C6 = 0.12mm
D	Stiffener Length	Standard = 10mm
S	Stripped Length	3 or 4mm Standard
t	Terminal Thickness	0.3mm
	Insulation Length	= Total Length minus 2 x Stripped Length

CABLE STYLES

For other pitches and cross-sections please contact Yamaichi

Type A (std.)

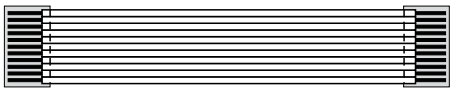

Type B (std.)

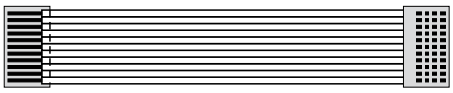

SPECIFICATIONS

Insulation Resistance:	100MΩ minimum
Contact Resistance:	20mΩ maximum
Withstanding Voltage:	500V ACrms for 1 minute
Voltage Rating:	125V DC
Current Rating:	1A
Operating Temp. Range:	-20°C to +85°C
Solder Temperature:	230°C min. / 60 sec., 250°C peak
Mating Cycles:	min 30 times

PART NUMBER

FPC-96212 - ** 01 - T&R

- Series No.
- No. of Contacts: 4 to 34 pins
- Vertical Type (180° SMT)
- T&R: Tape and Reel 1,000 pcs./reel

MATERIALS AND FINISH

Housing:	High-Temp. Thermoplastic (UL94V-0)
Actuator:	High-Temp. Thermoplastic (UL94V-0)
Contacts:	Copper Alloy, Tin Plated

FEATURES

- 180° SMT Zero Insertion Force connector for 1.00mm Flexible Flat Cable (FFC) and Flexible Printed Circuit (FPC) appliances

OUTLINE DIMENSIONS FOR TOP CONTACT

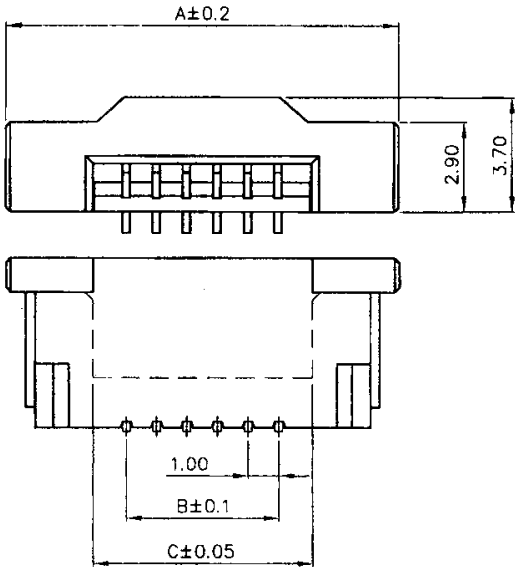

RECOMMENDED FPC CABLE

Thickness t=0.30 ±0.03mm

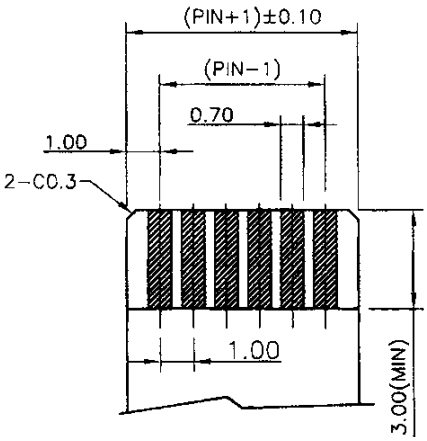

CONTACT (SIDE VIEW)

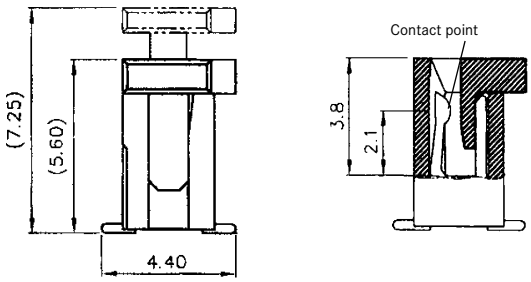

RECOMMENDED PCB LAYOUTS

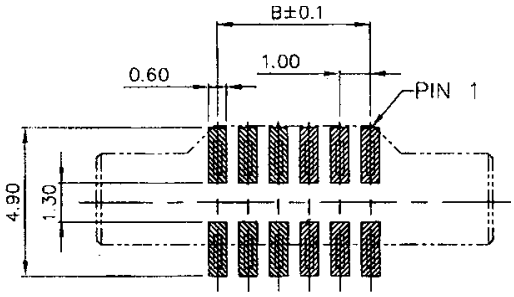

Part Number	Dim. A	Dim. B	Dim. C
FPC-96212-0401	11.00	3.00	5.15
FPC-96212-0501	12.00	4.00	6.15
FPC-96212-0601	13.00	5.00	7.15
FPC-96212-0701	14.00	6.00	8.15
FPC-96212-0801	15.00	7.00	9.15
FPC-96212-1001	17.00	9.00	11.15
FPC-96212-1101	18.00	10.00	12.15
FPC-96212-1201	19.00	11.00	13.15
FPC-96212-1301	20.00	12.00	14.15
FPC-96212-1401	21.00	13.00	15.15

Part Number	Dim. A	Dim. B	Dim. C
FPC-96212-1501	22.00	14.00	16.15
FPC-96212-1601	23.00	15.00	17.15
FPC-96212-1701	24.00	16.00	18.15
FPC-96212-1801	25.00	17.00	19.15
FPC-96212-1901	26.00	18.00	20.15
FPC-96212-2001	27.00	19.00	21.15
FPC-96212-2101	28.00	20.00	22.15
FPC-96212-2201	29.00	21.00	23.15
FPC-96212-2301	30.00	22.00	24.15
FPC-96212-2401	31.00	23.00	25.15

Part Number	Dim. A	Dim. B	Dim. C
FPC-96212-2501	32.00	24.00	26.15
FPC-96212-2601	33.00	25.00	27.15
FPC-96212-2701	34.00	26.00	28.15
FPC-96212-2801	35.00	27.00	29.15
FPC-96212-3001	37.00	29.00	31.15
FPC-96212-3201	39.00	31.00	33.15
FPC-96212-3301	40.00	32.00	34.15
FPC-96212-3401	41.00	33.00	35.15

SPECIFICATIONS

Insulation Resistance:	100MΩ minimum
Contact Resistance:	20mΩ maximum
Withstanding Voltage:	500V ACrms for 1 minute
Voltage Rating:	125V DC
Current Rating:	1A
Operating Temp. Range:	-25°C to +85°C
Solder Temperature:	230°C min. / 60 sec., 260°C peak
Mating Cycles:	min 30 times

PART NUMBER

FPC-96212 - ** *1 - T&R

- Series No.
- No. of Contacts: 4 to 34 pins
- 1 = Top Contacts
  2 = Bottom Contacts
- T&R: Tape and Reel 1,500 pcs./reel

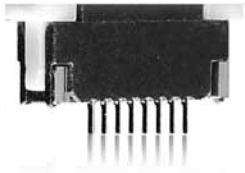

MATERIALS AND FINISH

Housing:	High-Temp. Thermoplastic (UL94V-0)
Actuator:	High-Temp. Thermoplastic (UL94V-0)
Contacts:	Copper Alloy, Tin Plated

FEATURES

- 90° SMT Zero Insertion Force connector for1.00mm Flexible Flat Cable (FFC) and Flexible Printed Circuit (FPC) appliances
- Top or bottom contact type

OUTLINE DIMENSIONS FOR TOP CONTACT

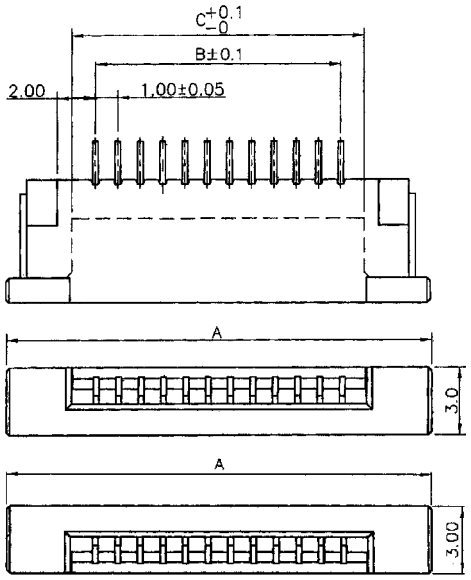

Bottom Contact

RECOMMENDED FPC CABLE

Thickness t=0.30 ±0.03mm

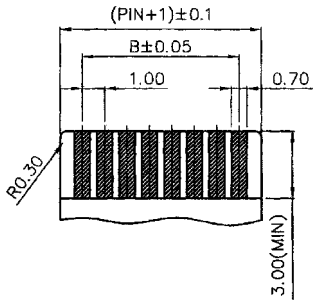

CONTACTS (SIDE VIEW)

Top Contact

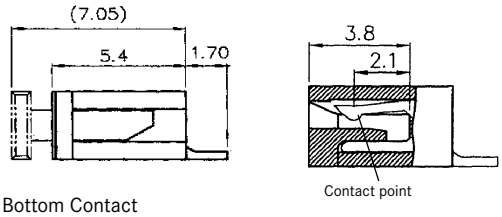

Bottom Contact

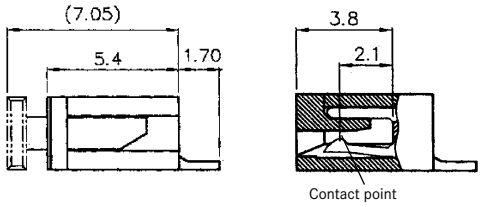

RECOMMENDED PCB LAYOUTS

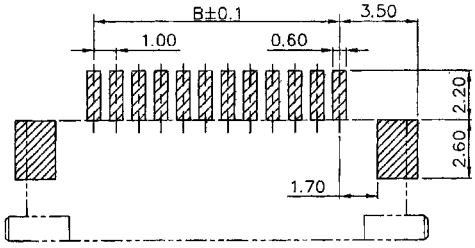

Part Number	Dim. A	Dim. B	Dim. C
FPC-96212-04*1	11.00	3.00	5.15
FPC-96212-05*1	12.00	4.00	6.15
FPC-96212-06*1	13.00	5.00	7.15
FPC-96212-07*1	14.00	6.00	8.15
FPC-96212-08*1	15.00	7.00	9.15
FPC-96212-0911	16.00	8.00	10.15
FPC-96212-10*1	17.00	9.00	11.15
FPC-96212-11*1	18.00	10.00	12.15
FPC-96212-12*1	19.00	11.00	13.15
FPC-96212-13*1	20.00	12.00	14.15

Part Number	Dim. A	Dim. B	Dim. C
FPC-96212-14*1	21.00	13.00	15.15
FPC-96212-15*1	22.00	14.00	16.15
FPC-96212-16*1	23.00	15.00	17.15
FPC-96212-17*1	24.00	16.00	18.15
FPC-96212-18*1	25.00	17.00	19.15
FPC-96212-1921	26.00	18.00	20.15
FPC-96212-20*1	27.00	19.00	21.15
FPC-96212-22*1	29.00	21.00	23.15
FPC-96212-23*1	30.00	22.00	24.15
FPC-96212-24*1	31.00	23.00	25.15

Part Number	Dim. A	Dim. B	Dim. C
FPC-96212-25*1	32.00	24.00	26.15
FPC-96212-25*1	32.00	24.00	26.15
FPC-96212-26*1	33.00	25.00	27.15
FPC-96212-2721	34.00	26.00	28.15
FPC-96212-28*1	35.00	27.00	29.15
FPC-96212-30*1	37.00	29.00	31.15
FPC-96212-3221	39.00	31.00	33.15
FPC-96212-34*1	41.00	33.00	35.15

SPECIFICATIONS

Insulation Resistance:	100MΩ minimum
Contact Resistance:	20mΩ maximum
Withstanding Voltage:	500V ACrms for 1 minute
Voltage Rating:	50V DC
Current Rating:	0.5A
Operating Temp. Range:	-40°C to +80°C
Solder Temperature:	230°C min. / 60 sec., 250°C peak
Mating Cycles:	min 30 times

MATERIALS AND FINISH

Housing:	High-Temp. Thermoplastic (UL94V-0)
Actuator:	High-Temp. Thermoplastic (UL94V-0)
Contacts:	Copper Alloy, Tin Plated

FEATURES

- 180° SMT Zero Insertion Force connector for 0.50mm Flexible Flat Cable (FFC) and Flexible Printed Circuit (FPC) appliances

PART NUMBER

FPC-98210 - ** 01 - T&R

- Series No.
- No. of Contacts: 4 to 50 pins
- Vertical Type (180° SMT)
- T&R: Tape and Reel 1,000 pcs./reel

*PART NUMBER (GOLD PLATED VERSION)

FPC-98210-**01-FF-T&R

*INFO: FF = Au flash plating on contacts

OUTLINE DIMENSIONS FOR TOP CONTACT

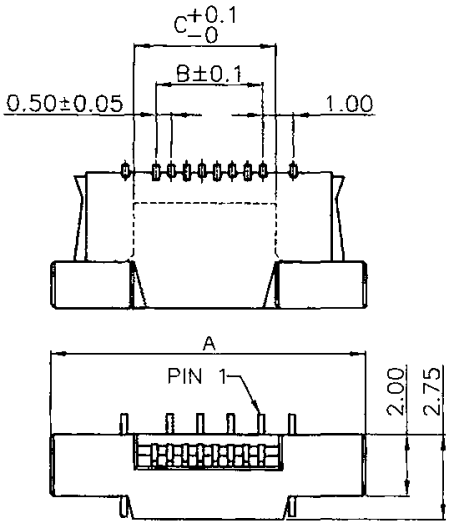

RECOMMENDED FPC CABLE

Thickness t=0.30 ±0.03mm

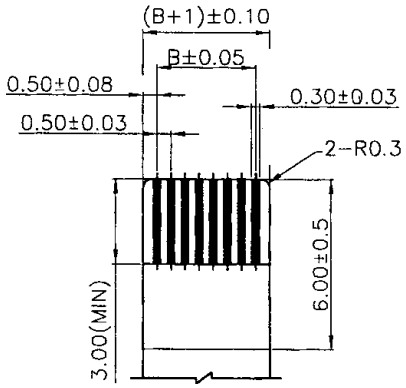

CONTACTS (SIDE VIEW)

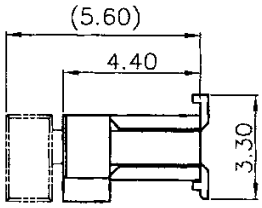

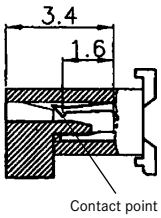

RECOMMENDED PCB LAYOUTS

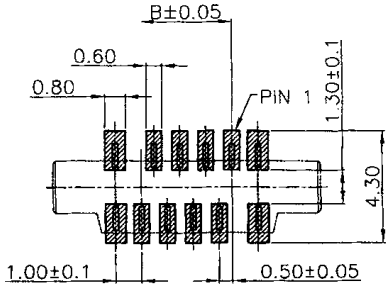

Part Number	Dim. A	Dim. B	Dim. C
FPC-98210-0401	8.50	1.50	2.60
FPC-98210-0501	9.00	2.00	3.10
FPC-98210-0601	9.50	2.50	3.60
FPC-98210-0801	10.50	3.50	4.60
FPC-98210-0901	11.00	4.00	5.10
FPC-98210-1001	11.50	4.50	5.60
FPC-98210-1101	12.00	5.00	6.10
FPC-98210-1201	12.50	5.50	6.60
FPC-98210-1301	13.00	6.00	7.10
FPC-98210-1401	13.50	6.50	7.60
FPC-98210-1501	14.00	7.00	8.10
FPC-98210-1601	14.50	7.50	8.60

Part Number	Dim. A	Dim. B	Dim. C
FPC-98210-1701	15.00	8.00	9.10
FPC-98210-1801	15.50	8.50	9.60
FPC-98210-2001	16.50	9.50	10.60
FPC-98210-2101	17.00	10.00	11.10
FPC-98210-2201	17.50	10.50	11.60
FPC-98210-2401	18.50	11.50	12.60
FPC-98210-2501	19.00	12.00	13.10
FPC-98210-2701	20.00	13.00	14.10
FPC-98210-2801	20.50	13.50	14.60
FPC-98210-2601	19.50	12.50	13.60
FPC-98210-3001	21.50	14.50	15.60
FPC-98210-3201	22.50	15.50	16.60

Part Number	Dim. A	Dim. B	Dim. C
FPC-98210-3301	23.00	16.00	17.10
FPC-98210-3401	23.50	16.50	17.60
FPC-98210-3601	24.50	17.50	18.60
FPC-98210-3901	26.00	19.00	20.10
FPC-98210-4001	26.50	19.50	20.60
FPC-98210-4101	27.00	20.00	21.10
FPC-98210-4401	28.50	21.50	22.60
FPC-98210-4501	29.00	22.00	23.10
FPC-98210-4801	30.50	23.50	24.60
FPC-98210-4901	31.00	24.00	25.10
FPC-98210-5001	31.50	24.50	25.60

SPECIFICATIONS

Insulation Resistance:	100MΩ minimum
Contact Resistance:	20mΩ maximum
Withstanding Voltage:	500V ACrms for 1 minute
Voltage Rating:	50V DC
Current Rating:	0.5A
Operating Temp. Range:	-40°C to +80°C
Solder Temperature:	230°C min. / 60 sec., 250°C peak
Mating Cycles:	min 30 times

MATERIALS AND FINISH

Housing:	High-Temp. Thermoplastic (UL94V-0)
Actuator:	High-Temp. Thermoplastic (UL94V-0)
Contacts:	Copper Alloy, Tin Plated

FEATURES

- 90° SMT Zero Insertion Force connector for 0.50mm Flexible Flat Cable (FFC) and Flexible Printed Circuit (FPC) appliances
- Top or bottom contact type

PART NUMBER

FPC-98210 - ** *1 - T&R

- Series No.
- No. of Contacts: 4 to 50 pins
- 1 = Top Contacts
  2 = Bottom Contacts
- T&R: Tape and Reel 2,000 pcs./reel

*PART NUMBER (GOLD PLATED VERSION)

FPC-98210-*1-FF-T&R**

*INFO: FF = Au flash plating on contacts

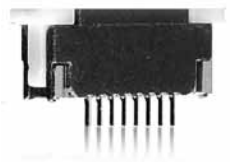

OUTLINE DIMENSIONS FOR TOP CONTACT

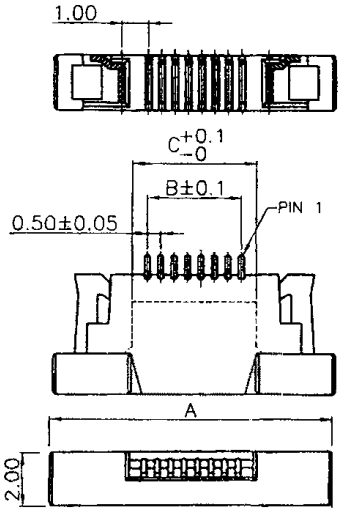

CONTACTS (SIDE VIEW)

Top Contact

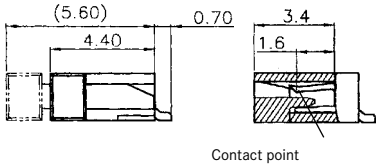

Bottom Contact

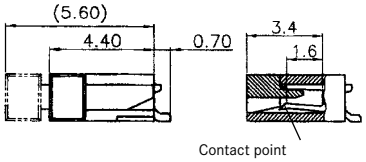

RECOMMENDED FPC CABLE

Thickness t=0.30 ±0.03mm

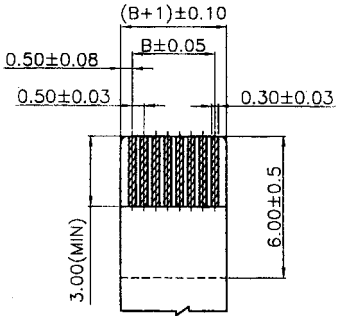

RECOMMENDED PCB LAYOUTS

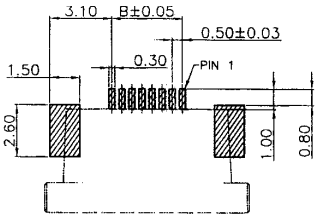

Part Number	Dim. A	Dim. B	Dim. C
FC-98210-04*1	8.50	1.50	2.60
FPC-98210-05*1	9.00	2.00	3.10
FPC-98210-06*1	9.50	2.50	3.60
FPC-98210-07*1	10.00	3.00	4.10
FPC-98210-08*1	10.50	3.50	4.60
FPC-98210-0911	11.00	4.00	5.10
FPC-98210-10*1	11.50	4.50	5.60
FPC-98210-11*1	12.00	5.00	6.10
FPC-98210-12*1	12.50	5.50	6.60
FPC-98210-13*1	13.00	6.00	7.10
FPC-98210-14*1	13.50	6.50	7.60
FPC-98210-15*1	14.00	7.00	8.10
FPC-98210-16*1	14.50	7.50	8.60
FPC-98210-17*1	15.00	8.00	9.10
FPC-98210-18*1	15.50	8.50	9.60
FPC-98210-1911	16.00	9.00	10.10

Part Number	Dim. A	Dim. B	Dim. C
FPC-98210-20*1	16.50	9.50	10.60
FPC-98210-21*1	17.00	10.00	11.10
FPC-98210-22*1	17.50	10.50	11.60
FPC-98210-23*1	18.00	11.00	12.10
FPC-98210-24*1	18.50	11.50	12.60
FPC-98210-25*1	19.00	12.00	13.10
FPC-98210-26*1	19.50	12.50	13.60
FPC-98210-27*1	20.00	13.00	14.10
FPC-98210-28*1	20.50	13.50	14.60
FPC-98210-2911	21.00	14.00	15.10
FPC-98210-30*1	21.50	14.50	15.60
FPC-98210-3111	22.00	15.00	16.10
FPC-98210-32*1	22.50	15.50	16.60
FPC-98210-33*1	23.00	16.00	17.10
FPC-98210-34*1	23.50	16.50	17.60

Part Number	Dim. A	Dim. B	Dim. C
FPC-98210-36*1	24.50	17.50	18.60
FPC-98210-3711	25.00	18.00	19.10
FPC-98210-38*1	25.50	18.50	19.60
FPC-98210-39*1	26.00	19.00	20.10
FPC-98210-40*1	26.50	19.50	20.60
FPC-98210-4111	27.00	20.00	21.10
FPC-98210-4211	27.50	20.50	21.60
FPC-98210-4311	28.00	21.00	22.10
FPC-98210-4411	28.50	21.50	22.60
FPC-98210-45*1	29.00	22.00	23.10
FPC-98210-4611	29.50	22.50	23.60
FPC-98210-47*1	30.00	23.00	24.10
FPC-98210-48*1	30.50	23.50	24.60
FPC-98210-4911	31.00	24.00	25.10
FPC-98210-50*1	31.50	24.50	25.60

SPECIFICATIONS

Insulation Resistance:	1,000MΩ min. at 500V DC
Withstanding Voltage:	1,000V AC rms for 1 minute
Contact Resistance:	30mΩ max. at 10mA
Current Rating:	1A
Operating Temp. Range:	-20°C to +105°C
Soldering Temperature:	260°C / 10 sec.

MATERIALS AND FINISH

Housing:	PBT, glass filled UL94V-0 rated
Latch:	PA, glass filled UL94V-0 rated
Contacts:	Phosphor Bronze
Plating:	Contacts - Au over Nickel
	Solder Terminals - Flash Au over Nickel

FEATURES

- 2.54 mm contact pitch connectors for MIL standard
- Variations include latch header plugs, box header plugs, and flat cable sockets
- Two types (short latch and middle latch) available

PART NUMBER

FAP - 3401 - 1 1 0* - 2 - 0 * F

- Series (plug)
- No. of Leads
- Housing Types:
  1 = MIL Standard key slot (plus central key slot on 16 or more leads)
  2 = Central key slot (10 leads only)
- Latch Types:
  1 = Short Latches (Height = 23.3mm, mating socket is without strain relief)
  2 = Middle Latches (Height = 26.6mm, mating socket is with strain relief)
- Terminal Types:
  2 = Right Angle Solder Dip
  4 = Straight Solder Dip
- Housing Colour: 1 = Black, 2 = Blue (Standard)
  0 = Mating Cables (1.27 pitch):
- AWG 28 Stranded Wire or AWG 30 Solid Wire
- Contact Plating: A = Gold (0.76µm over Ni 2.5~4.5µm)
  B = Gold (0.3µm over Ni 2.5~4.5µm)
- Solder Terminal Plating: F = Flash Au over Ni

OUTLINE DIMENSIONS

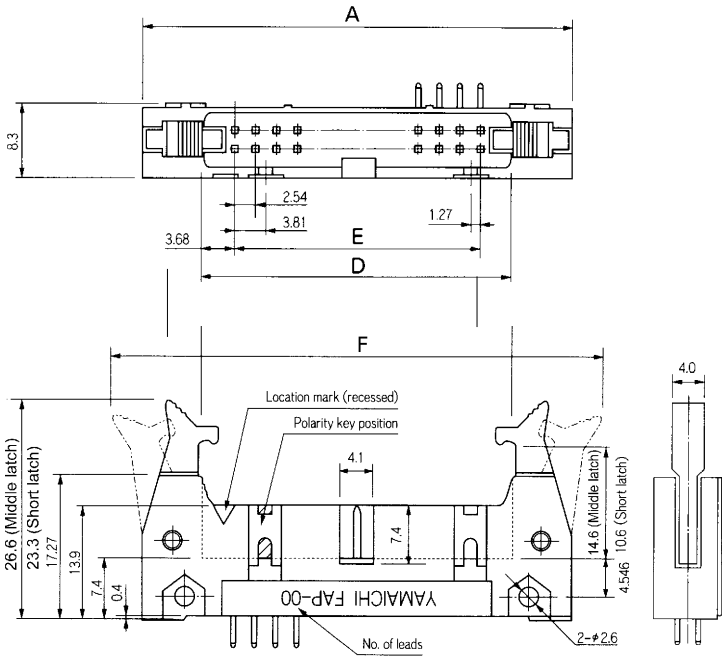

CONTACT DETAILS AND TERMINAL TYPES

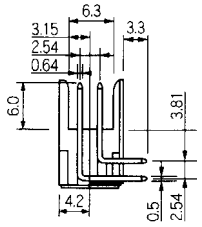

Type 02 - Right angle solder dip terminal

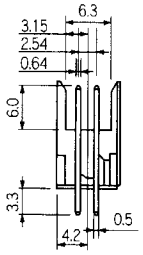

Type 04 - Sraight solder dip terminal

RECOMMENDED PCB LAYOUT

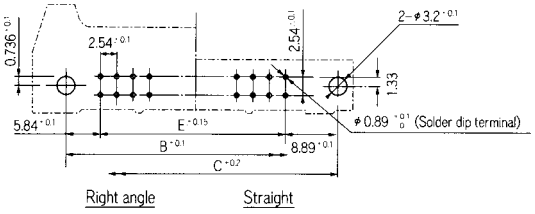

Top View from Plug

Standard types see table.
For other versions please contact Yamaichi, minimum order quantity may be required

Part Number	No. of Leads	A	B	C	D	E	F (max.)
FAP-1001-2104-2-0AF	10	32.00	21.84	27.94	17.52	10.16	48.52
FAP-1001-2104-2-0BF	10	32.00	21.84	27.94	17.52	10.16	48.52
FAP-1001-2202-2-0AF	10	32.00	21.84	27.94	17.52	10.16	48.52
FAP-1001-2202-2-0BF	10	32.00	21.84	27.94	17.52	10.16	48.52
FAP-1001-2204-2-0AF	10	32.00	21.84	27.94	17.52	10.16	48.52

Cont´d

Part Number	No. of Leads	A	B	C	D	E	F (max.)
FAP-1001-2204-2-0BF	10	32.00	21.84	27.94	17.52	10.16	48.52
FAP-1401-1104-2-0AF	14	37.20	26.84	32.12	23.34	15.24	52.24
FAP-1401-1202-2-0BF	14	37.20	26.84	32.12	23.34	15.24	52.24
FAP-1401-1204-2-0AF	14	37.20	26.84	32.12	23.34	15.24	52.24
FAP-1401-1204-2-0BF	14	37.20	26.84	32.12	23.34	15.24	52.24
FAP-1601-1104-2-0AF	16	39.62	29.46	35.56	25.14	17.78	56.14
FAP-1601-1104-1-0BF	16	39.62	29.46	35.56	25.14	17.78	56.14
FAP-1601-1104-2-0AF	16	39.62	29.46	35.56	25.14	17.78	56.14
FAP-1601-1104-2-0BF	16	39.62	29.46	35.56	25.14	17.78	56.14
FAP-1601-1202-2-0AF	16	39.62	29.46	35.56	25.14	17.78	56.14
FAP-1601-1202-2-0BF	16	39.62	29.46	35.56	25.14	17.78	56.14
FAP-1601-1204-1-0BF	16	39.62	29.46	35.56	25.14	17.78	56.14
FAP-1601-1204-2-0BF	16	39.62	29.46	35.56	25.14	17.78	56.14
FAP-2001-1102-1-0BF	20	44.70	34.54	40.64	30.22	22.86	61.22
FAP-2001-1104-2-0AF	20	44.70	34.54	40.64	30.22	22.86	61.22
FAP-2001-1104-2-0BF	20	44.70	34.54	40.64	30.22	22.86	61.22
FAP-2001-1202-2-0AF	20	44.70	34.54	40.64	30.22	22.86	61.22
FAP-2001-1202-2-0BF	20	44.70	34.54	40.64	30.22	22.86	61.22
FAP-2001-1204-2-0AF	20	44.70	34.54	40.64	30.22	22.86	61.22
FAP-2001-1204-2-0BF	20	44.70	34.54	40.64	30.22	22.86	61.22
FAP-2601-1102-2-0AF	26	52.32	42.16	48.26	37.84	30.48	68.84
FAP-2601-1104-2-0AF	26	52.32	42.16	48.26	37.84	30.48	68.84
FAP-2601-1104-2-0BF	26	52.32	42.16	48.26	37.84	30.48	68.84
FAP-2601-1202-2-0AF	26	52.32	42.16	48.26	37.84	30.48	68.84
FAP-2601-1202-2-0BF	26	52.32	42.16	48.26	37.84	30.48	68.84
FAP-2601-1204-2-0AF	26	52.32	42.16	48.26	37.84	30.48	68.84
FAP-2601-1204-2-0BF	26	52.32	42.16	48.26	37.84	30.48	68.84
FAP-3001-1202-2-0BF	30	57.40	47.24	53.42	42.92	35.56	73.92
FAP-3401-1102-2-0AF	34	62.48	52.32	58.42	48.00	40.64	79.00
FAP-3401-1102-2-0BF	34	62.48	52.32	58.42	48.00	40.64	79.00
FAP-3401-1104-2-0AF	34	62.48	52.32	58.42	48.00	40.64	79.00
FAP-3401-1202-2-0AF	34	62.48	52.32	58.42	48.00	40.64	79.00
FAP-3401-1202-2-0BF	34	62.48	52.32	58.42	48.00	40.64	79.00
FAP-3401-1204-2-0AF	34	62.48	52.32	58.42	48.00	40.64	79.00
FAP-3401-1204-2-0BF	34	62.48	52.32	58.42	48.00	40.64	79.00
FAP-4001-1102-2-0AF	40	70.10	59.94	66.04	55.62	48.26	86.62
FAP-4001-1102-2-0BF	40	70.10	59.94	66.04	55.62	48.26	86.62
FAP-4001-1104-2-0AF	40	70.10	59.94	66.04	55.62	48.26	86.62
FAP-4001-1202-2-0AF	40	70.10	59.94	66.04	55.62	48.26	86.62
FAP-4001-1202-2-0BF	40	70.10	59.94	66.04	55.62	48.26	86.62
FAP-4001-1204-2-0AF	40	70.10	59.94	66.04	55.62	48.26	86.62
FAP-5001-1104-2-0AF	50	82.80	72.64	78.74	68.32	60.96	99.32
FAP-5001-1202-2-0AF	50	82.80	72.64	78.74	68.32	60.96	99.32
FAP-5001-1202-2-0BF	50	82.80	72.64	78.74	68.32	60.96	99.32
FAP-5001-1204-2-0AF	50	82.80	72.64	78.74	68.32	60.96	99.32
FAP-5001-1204-2-0BF	50	82.80	72.64	78.74	68.32	60.96	99.32
FAP-6001-1202-2-0BF	60	95.50	85.34	91.44	81.02	73.66	112.02
FAP-6001-1204-2-0AF	60	95.50	85.34	91.44	81.02	73.66	112.02
FAP-6001-1204-2-0BF	60	95.50	85.34	91.44	81.02	73.66	112.02
FAP-6401-1102-2-0AF	64	100.60	90.42	96.52	86.10	78.74	117.10
FAP-6401-1104-1-0BF	64	100.60	90.42	96.52	86.10	78.74	117.10
FAP-6401-1104-2-0AF	64	100.60	90.42	96.52	86.10	78.74	117.10
FAP-6401-1202-2-0AF	64	100.60	90.42	96.52	86.10	78.74	117.10
FAP-6401-1202-2-0BF	64	100.60	90.42	96.52	86.10	78.74	117.10
FAP-6401-1204-1-0BF	64	100.60	90.42	96.52	86.10	78.74	117.10
FAP-6401-1204-2-0AF	64	100.60	90.42	96.52	86.10	78.74	117.10

SPECIFICATIONS

Insulation Resistance:	1,000MΩ min. at 500V DC
Withstanding Voltage:	1,000V ACrms for 1 minute
Contact Resistance:	30mΩ max. at 10mA
Current Rating:	1A
Operating Temp. Range:	-20°C to +105°C
Soldering Temperature:	260°C / 10 sec.

MATERIALS AND FINISH

Housing:	PBT, glass filled UL94V-0 rated
Contacts:	Copper Alloy
Plating:	Contacts - Gold over Nickel
	Solder Terminals - Flash Au over Ni

FEATURES

- 2.54mm contact pitch connectors for MIL standard
- Variations include latch header plugs, box header plugs, and flat cable sockets

PART NUMBER

FAP - 34 - 08 - * - 1 - 0 * F

- Series (plug)
- No. of Leads
- Terminal Type:
  2 = Right Angle Solder Dip
  4 = Straight Solder Dip
- Housing Colour: 1 = Black, 2 = Blue
- Contact Plating:
  A = Gold (0.76µm over Nickel 2.5~4.5µm)
  B = Gold (0.3µm over Nickel 2.5 ~4.5µm)
- F = Flash Au over Ni

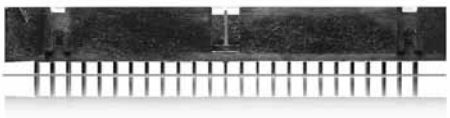

OUTLINE DIMENSIONS

Straight Solder Dip Type

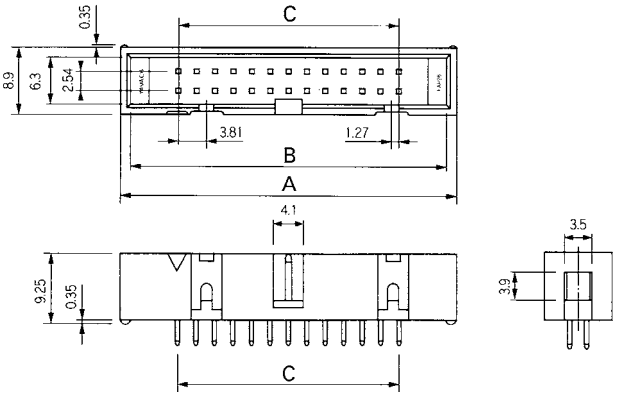

OUTLINE DIMENSIONS

Right Angle Solder Dip Type

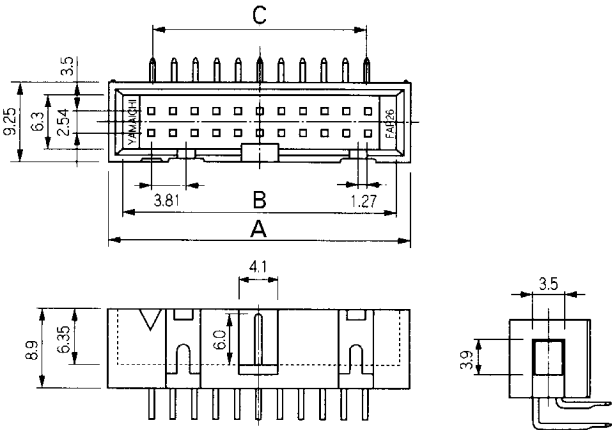

CONTACT DETAILS

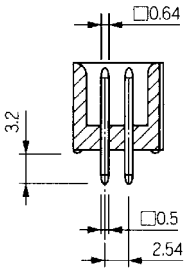

CONTACT DETAILS

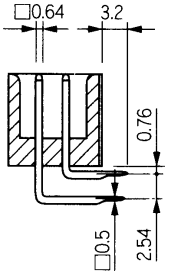

RECOMMENDED PCB LAYOUT

Top View from Plug

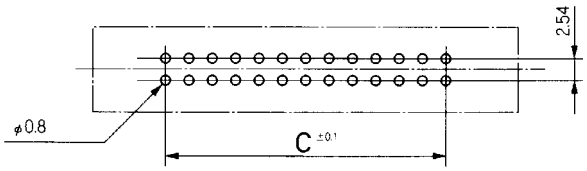

RECOMMENDED PCB LAYOUT

Top View from Plug

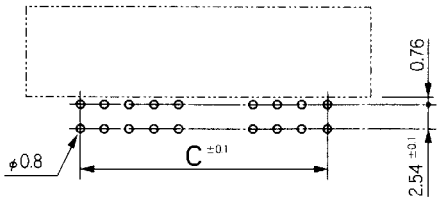

PART NUMBERS

Standard types see table.
For other versions please contact Yamaichi, minimum order quantity may be required

Part Number	No. of Leads	A	B	C
FAP-10-08-2-1-0BF	10	20.30	17.90	10.16
FAP-10-08-2-2-0AF	10	20.30	17.90	10.16
FAP-10-08-2-2-0BF	10	20.30	17.90	10.16
FAP-10-08-4-1-0BF	10	20.30	17.90	10.16
FAP-10-08-4-2-0AF	10	20.30	17.90	10.16
FAP-10-08-4-2-0BF	10	20.30	17.90	10.16
FAP-14-08-2-2-0AF	14	25.40	23.00	15.24
FAP-14-08-2-2-0BF	14	25.40	23.00	15.24
FAP-14-08-2-2-0BF	14	25.40	23.00	15.24
FAP-14-08-4-1-0BF	14	25.40	23.00	15.24
FAP-14-08-4-2-0AF	14	25.40	23.00	15.24
FAP-14-08-4-2-0BF	14	25.40	23.00	15.24
FAP-16-08-2-1-0BF	16	27.90	25.50	17.78
FAP-16-08-2-2-0AF	16	27.90	25.50	17.78
FAP-16-08-2-2-0BF	16	27.90	25.50	17.78
FAP-16-08-4-1-0BF	16	27.90	25.50	17.78
FAP-16-08-4-2-0AF	16	27.90	25.50	17.78
FAP-16-08-4-2-0BF	16	27.90	25.50	17.78
FAP-20-08-2-2-0AF	20	33.00	30.60	22.86
FAP-20-08-2-2-0BF	20	33.00	30.60	22.86
FAP-20-08-4-2-0AF	20	33.00	30.60	22.86
FAP-20-08-4-2-0BF	20	33.00	30.60	22.86
FAP-26-08-2-2-0AF	26	40.60	38.20	30.48
FAP-26-08-2-2-0BF	26	40.60	38.20	30.48
FAP-26-08-4-1-0BF	26	40.60	38.20	30.48
FAP-26-08-4-2-0AF	26	40.60	38.20	30.48
FAP-26-08-4-2-0BF	26	40.60	38.20	30.48
FAP-34-08-2-2-0AF	34	50.80	48.40	40.64
FAP-34-08-2-2-0BF	34	50.80	48.40	40.64
FAP-34-08-4-2-0AF	34	50.80	48.40	40.64
FAP-34-08-4-2-0BF	34	50.80	48.40	40.64
FAP-40-08-2-2-0AF	40	58.40	56.00	48.26
FAP-40-08-2-2-0BF	40	58.40	56.00	48.26
FAP-40-08-4-2-0AF	40	58.40	56.00	48.26
FAP-40-08-4-2-0BF	40	58.40	56.00	48.26
FAP-50-08-2-2-0BF	50	71.10	68.70	60.96
FAP-50-08-4-2-0AF	50	71.10	68.70	60.96
FAP-50-08-4-2-0BF	50	71.10	68.70	60.96
FAP-64-08-4-2-0AF	64	88.90	86.50	78.74

SPECIFICATIONS

Insulation Resistance:	1,000MΩ min. at 500V DC
Withstanding Voltage:	700V ACrms for 1 minute
Contact Resistance:	30mΩ max. at 10mA
Current Rating:	1A
Operating Temp. Range:	−20°C to +105°C

MATERIALS AND FINISH

Housing:	PBT, glass filled UL 94V-0 rated
Contacts:	Phosphor Bronze
Plating:	Contacts - Au over Ni
	IDC Terminals - Flash Au over Nickel

FEATURES

- 2.54 mm contact pitch connectors for 50 MIL standard flat cables
- Variations include latch header plugs, box header plugs, and flat cable sockets

JIGS AND TOOLS (For FAS / FAP Type)

Hand press: FX-003
Applicable jig: FA-005

PART NUMBER

FAS - 34 01 - 2 2 01 - * - 0 * F

- Series (socket)
- No. of Leads
- Housing Type: 2 = MIL std. key (with central key)
- Pressure Cover Type: 1 = Open End, 2 = Closed End
- Strain Relief
- Housing Colour: 1 = Black 2 = Blue (Standard)
- 0 = Mating Cables (1.27 pitch): AWG 28 Stranded Wire or AWG 30 Solid Wire
- Contact Plating: A = Gold (0.76µm over Ni 2.5~4.5µm), B = Gold (0.3µm over Ni 2.5~4.5µm)
- IDC Terminal Plating: F = Flash Au over Ni

APPLICABLE CABLES

AWG 30 solid wire, 1.27mm pitch
(e.g. DK**-*, FLEX-S*, TPFLEX-N*, FS-FLEX-B*, see Section Cables)

OUTLINE DIMENSIONS

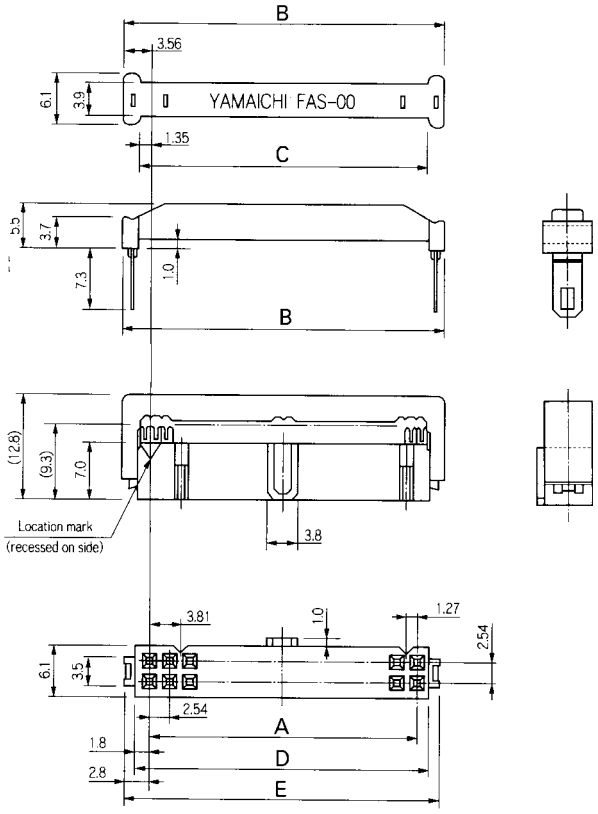

CONTACT DETAILS

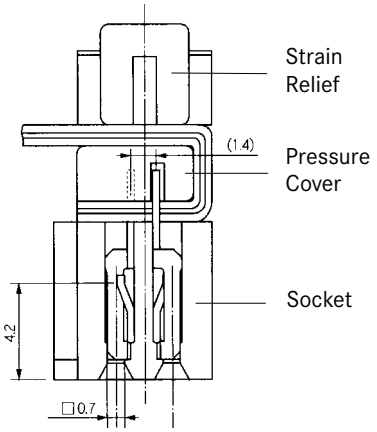

CABLE CONNECTION

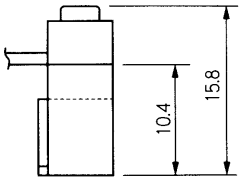

PART NUMBERS

Standard types see table.
For other versions please contact Yamaichi, minimum order quantity may be required

Part Number	No. of Leads	A	B	C	D	E
FAS-1001-2101-2-0AF	10	10.16	17.28	12.86	13.76	15.76
FAS-1001-2101-2-0BF	10	10.16	17.28	12.86	13.76	15.76
FAS-1401-2101-2-0AF	14	16.16	22.28	17.86	18.72	20.56
FAS-1401-2101-2-0BF	14	16.16	22.28	17.86	18.72	20.56
FAS-1601-2101-2-0AF	16	17.78	24.90	20.48	21.38	23.38
FAS-1601-2101-2-0BF	16	17.78	24.90	20.48	21.38	23.38
FAS-1601-2101-2-0BF	16	17.78	24.90	20.48	21.38	23.38
FAS-2001-2101-2-0AF	20	22.86	29.98	25.56	26.46	28.46
FAS-2001-2101-2-0BF	20	22.86	29.98	25.56	26.46	28.46
FAS-2001-2201-2-0AF	20	22.86	29.98	25.56	26.46	28.46
FAS-2601-2101-1-0BF	26	30.48	37.60	33.18	34.08	36.08
FAS-2601-2101-2-0AF	26	30.48	37.60	33.18	34.08	36.08
FAS-2601-2101-2-0BF	26	30.48	37.60	33.18	34.08	36.08
FAS-2601-2201-2-0AF	26	30.48	37.60	33.18	34.08	36.08
FAS-3001-2101-2-0BF	30	35.56	42.68	38.26	39.16	41.16
FAS-3401-2101-1-0BF	34	40.64	47.76	43.34	44.24	46.24
FAS-3401-2101-2-0AF	34	40.64	47.76	43.34	44.24	46.24
FAS-3401-2101-2-0BF	34	40.64	47.76	43.34	44.24	46.24
FAS-4001-2101-1-0BF	40	48.26	55.38	50.96	51.86	53.86
FAS-4001-2101-2-0AF	40	48.26	55.38	50.96	51.86	53.86
FAS-4001-2101-2-0BF	40	48.26	55.38	50.96	51.86	53.86
FAS-4001-2201-2-0AF	40	48.26	55.38	50.96	51.86	53.86
FAS-5001-2101-2-0AF	50	60.96	68.08	63.66	64.56	66.56
FAS-5001-2101-2-0BF	50	60.96	68.08	63.66	64.56	66.56
FAS-6001-2101-2-0AF	60	73.66	80.78	76.36	77.26	79.26
FAS-6401-2101-1-0BF	64	78.74	85.86	81.44	82.34	84.34
FAS-6401-2101-2-0AF	64	78.74	85.86	81.44	82.34	84.34
FAS-6401-2101-2-0BF	64	78.74	85.86	81.44	82.34	84.34

SPECIFICATIONS

Insulation Resistance:	1,000MΩ min. at 500V DC
Withstanding Voltage:	700V ACrms for 1 minute
Contact Resistance:	30mΩ max. at 10mA
Current Rating:	1A
Operating Temp. Range:	-20°C to +105°C

MATERIALS AND FINISH

Housing:	PBT, glass filled UL 94V-0 rated
Contacts:	Copper Alloy
Plating:	Contacts - Au 0.3µm over Ni
	IDC Terminals - Flash Au over Ni

FEATURES

- 2.54mm contact pitch sockets for flat cables with cable-end strain relief
- Variations include latch header plugs (for PC-board connection and IDC) and IDC sockets
- Two-point contact of the flat cable sockets ensures high reliability

JIGS AND TOOLS

- Hand press: FX-003
- Applicable jig: FA-005

PART NUMBER

FAS - 34 - 17

- Series (socket)
- No. of Leads
- Center Key

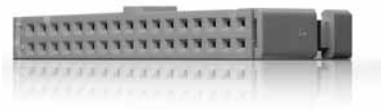

APPLICABLE CABLES

AWG 28 stranded wire, 1.27mm pitch
AWG 30 solid wire, 1.27mm pitch
(e.g. DK**-*, FLEX-S*, TPFLEX-N*, FS-FLEX-B*,see Section Cables)

OUTLINE DIMENSIONS

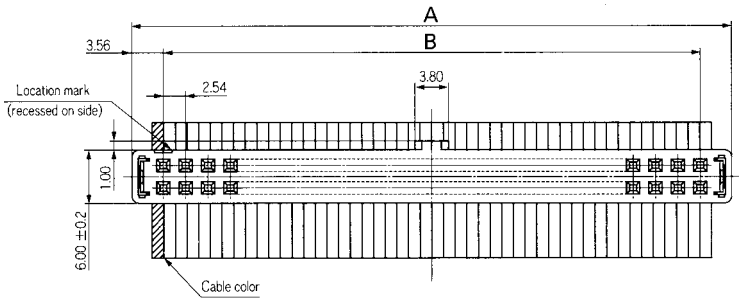

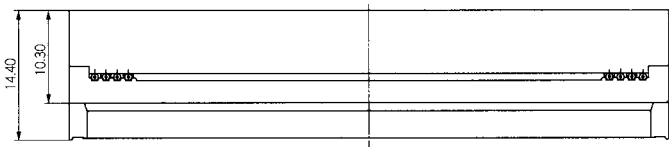

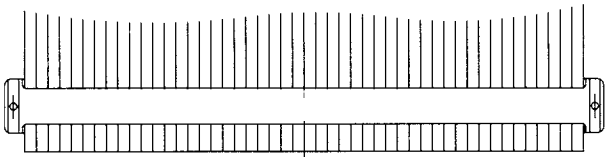

CONTACT DETAILS

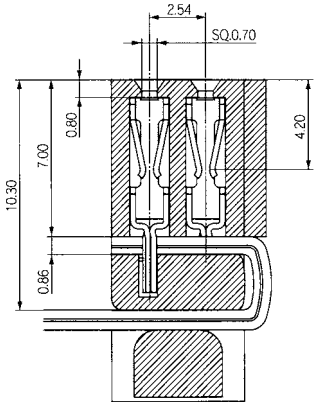

Standard types see table.
For other versions from 10 to 64 leads please contact Yamaichi, minimum order quantity may be required

Part Number	No. of Leads	A	B
FAS-16-17	16	24.90	17.78
FAS-20-17	20	29.98	22.86
FAS-26-17	26	37.60	30.48
FAS-34-17	34	47.76	40.64

SPECIFICATIONS

Insulation Resistance:	1,000MΩ min. at 500V DC
Withstanding Voltage:	700V ACrms for 1 minute
Contact Resistance:	30mΩ max. at 10mA
Current Rating:	1A
Operating Temp. Range:	-20°C to +105°C
Soldering Temperature:	230°C / 10 sec.

MATERIALS AND FINISH

Housing:	PBT (glass filled), UL 94V-0
Contacts:	Copper Alloy
Plating:	Au over Nickel

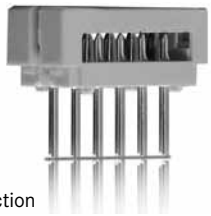

FEATURES

- Flat cable connectors for solder PC board connection
- High density

JIGS AND TOOLS

- Hand press: FX-003
- Applicable jig: FG-505
- Platen: Standard platen

APPLICABLE CABLES

AWG 28 stranded wire, 1.27mm pitch
AWG 30 solid wire, 1.27mm pitch
(e.g. DK**-*, FLEX-S, TPFLEX-N*, FS-FLEX-B*, see Section Cables)

OUTLINE DIMENSIONS

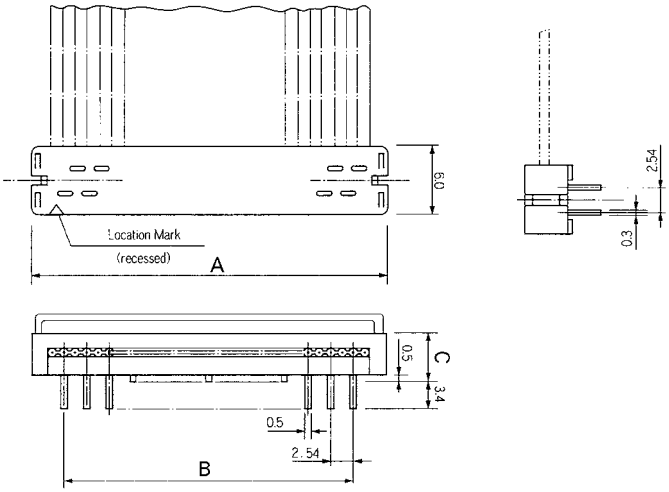

PART NUMBER

FGP - 40 01 - 05 0 * - 2 - 0FF

- Series (plug)
- No. of Leads
- Distance between IC - Terminal Rows: 01 = 0.1in.
- Design Number
- *Strain Relief Option: 0 = Without Strain Relief
- Terminal Length: 1 = 3.4mm (standard) 2 = 5.1mm (not available for 20 and 50 leads
- Colo116ur Code: 1 = Black 2 = Blue (standard)
- Type of IDC Contact Plating: 0FF = Au (0.05~0.1μm) over Nickel (2.5~4.5μm)

PART NUMBER (STRAIN RELIEF)

FGP-**01-0510-0000

- No. of Leads e.g.: 40

CONTACT DETAILS

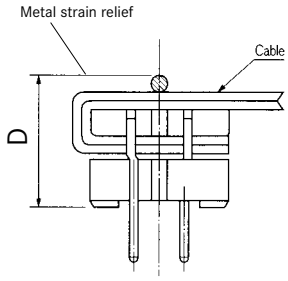

RECOMMENDED PCB LAYOUT

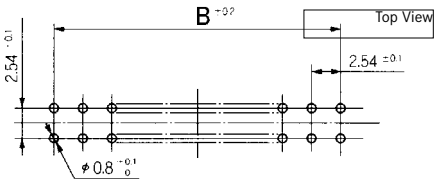

Standard types see table.
For other versions from 10 to 50 leads please contact Yamaichi, minimum order quantity may be required

Part Number	No. of Leads	A	B
FGP-1001-0501-2-0FF	10	16.70	10.16
FGP-1001-0502-2-0FF	10	16.70	10.16
FGP-1401-0501-2-0FF	14	21.85	15.26
FGP-1601-0501-2-0FF	16	24.32	17.78
FGP-2001-0501-2-0FF	20	29.40	22.86
FGP-2601-0501-2-0FF	26	37.02	30.48
FGP-3401-0501-2-0FF	34	47.18	40.64
FGP-4001-0501-2-0FF	40	54.80	48.26
FGP-5001-0501-2-0FF	50	67.50	60.96

Cable Thickness	C	D (up to 40 leads)	D (above 50 leads)
Max. 0.9	5.0	7.90	8.10
Max. 1.2	5.3	8.10	8.30

SPECIFICATIONS

Inulation Resistance:	1,000MΩ min. at 500V DC
Withstanding Voltage:	1,000V ACrms for 1 minute
Contact Resistance:	30mΩ max. at 10mA
Current Rating:	3A
Operating Temp. Range:	−40°C to +105°C

MATERIALS AND FINISH

Housing: PBT, UL94V-0 rated

FEATURES

- Crimp-on terminals allow complex wiring
- Solid wire terminals eliminate loss

MORE INFOMATION ABOUT:

- Applicable cables
- Crimp contact
- Crimp tool
- Polarity key see next page

PART NUMBER

UFS - 40 B - 04

- Series (socket)
- No. of leads
- Connector Type B = FAP Mating
- Design No.

OUTLINE DIMENSIONS

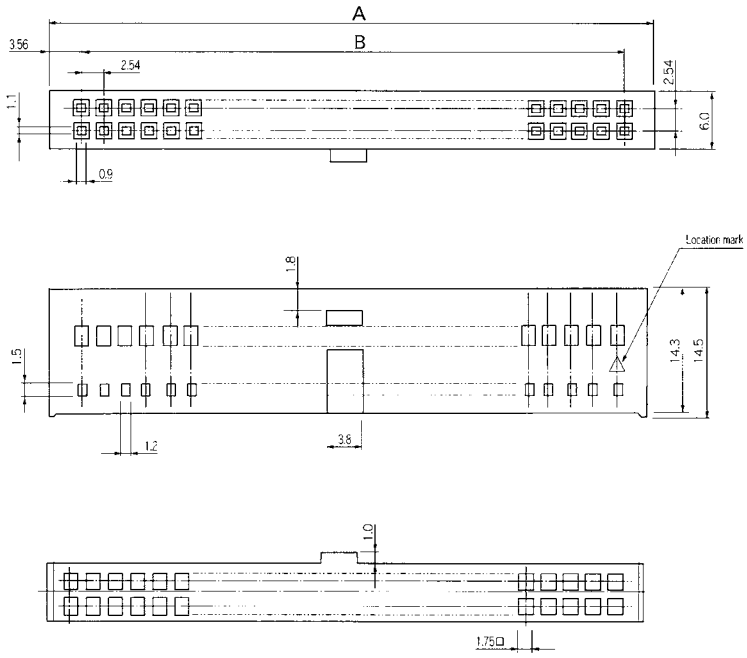

CONTACT DETAIL

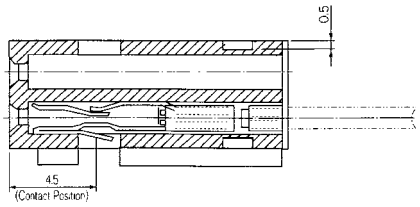

[1]For the following versions below please contact Yamaichi, minimum order quantity may be required

Part Number	No. of Leads	A	B
UFS-10B-04	10	17.28	10.16
UFS-16B-04	16	24.90	17.78
UFS-20B-04	20	29.98	22.86
UFS-26B-04	26	37.60	30.48
UFS-30B-04	30	42.68	35.56
UFS-34B-04	34	47.76	40.64
UFS-40B-04	40	55.38	48.26
UFS -50B-04 [1]	50	68.08	60.96
UFS-60B-04	60	80.78	73.66

CONTACT (TYPE 66)

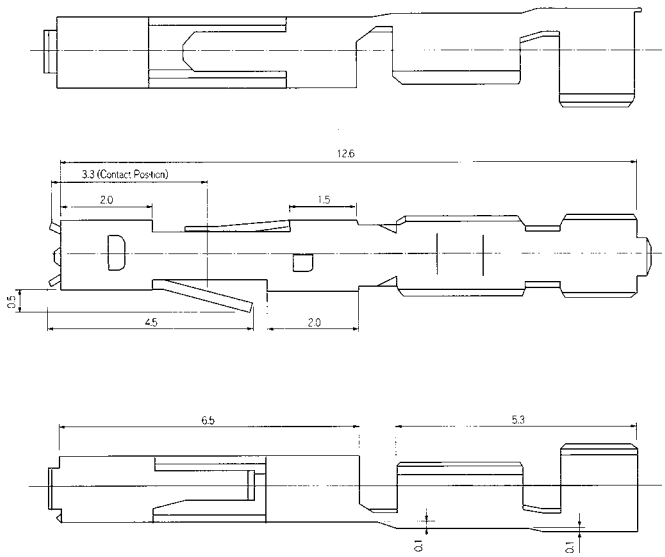

PART NUMBER

UFS-CONTACT 66 - * - **

Series No.

Packing Units:
1 = Bulk Pins (cut)
2 = On Reel (5,000 pcs. per reel)

Type of Contact Plating:
BF = Base (Nickel 2.5 ~ 4.5µm)
Contact (Gold 0.3µm min.)
Crimp (Gold 0.05µm min.)

AF = Base (Nickel 2.5 ~ 4.5µm)
Contact (Gold 0.76µm min.)
Crimp (Gold 0.05µm min.)

CRIMP TOOL

UFS Hand Tool-66-5

POLARITY KEY FOR UFS

Material: Nylon 66,
colour blue

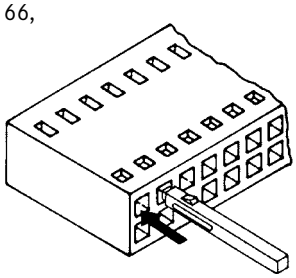

APPLICABLE CABLES

AWG Cable No.	24	26	28
Cross Section Area (mm^2)	0.2	0.15	0.08
Cable Retaining Force (min.)	3.5kg	2.1kg	1.4kg

SPECIFICATIONS

Insulation Resistance:	1,000MΩ min.
Withstanding Voltage:	500V ACrms for 1 minute
Contact Resistance:	20Ωm max.
Current Rating:	3A
Operating Temp. Range:	-40°C to +105°C

MATERIALS AND FINISH

Insulator: PBT UL94V-0 rated
Contacts: Brass, Au or Tin plating

FEATURES

- Pin counts, single row 2 to 40 and dual row 4 to 80

PART NUMBER

FP2 - 16 * - T* ** - *

- Series
- *Pin Count
- S = Single Row (2 to 40)
  D = Dual Row (4 to 80)
- T1 = 180° T9 = 90° Type TH
- Plating: Mating / Termination Area
  FF = Flash Gold / Flash Gold
  FL = Flash Gold / Tin
  LL = Tin / Tin
- T = Tube Packaging
  RC = Cap on Reel

* IMPORTANT INFO
Pin count represents total amount of pins for single or dual rows

OUTLINE DIMENSIONS 180°

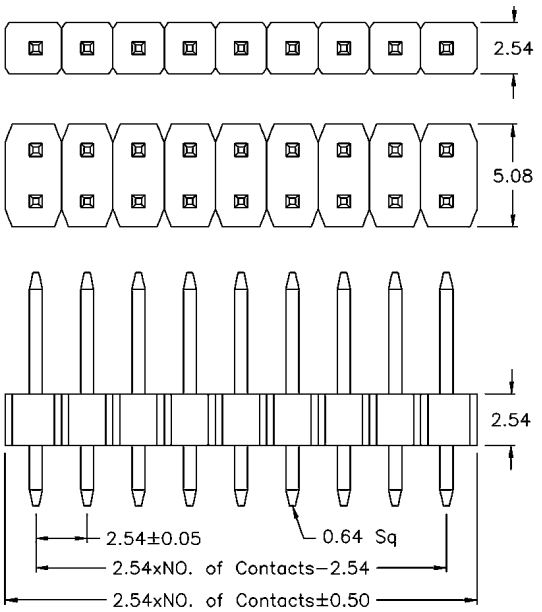

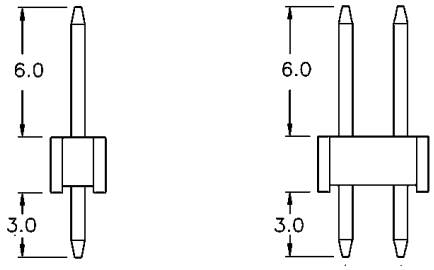

OUTLINE DIMENSIONS 90°

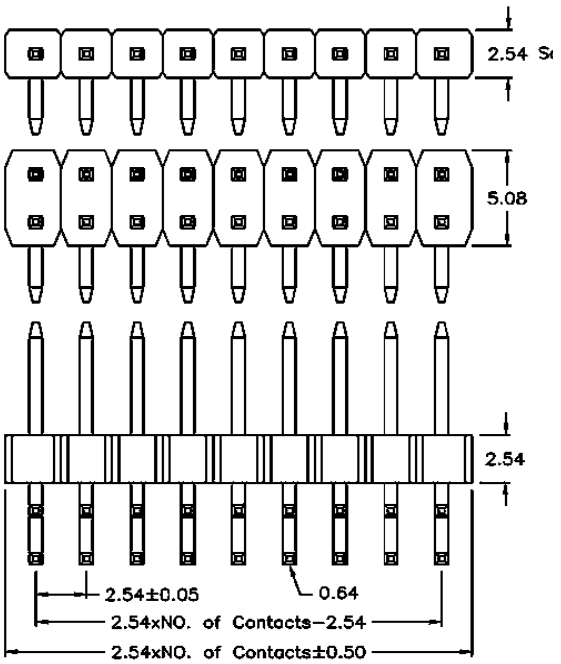

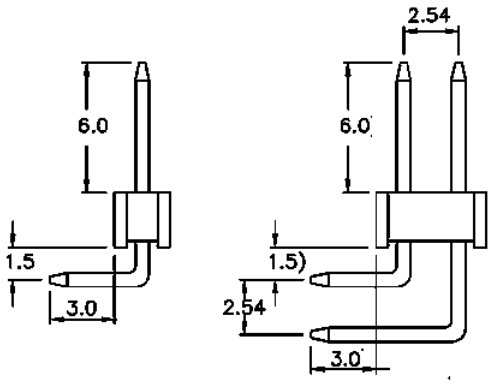

Trading Division

SPECIFICATIONS

Insulation Resistance:	1,000MΩ min.
Withstanding Voltage:	500V ACrms for 1 minute
Contact Resistance:	20Ωm max.
Current Rating:	1.5A
Operating Temp. Range:	-40°C to +105°C

MATERIALS AND FINISH

Insulator: Nylon6T, UL94V-0 rated
Contacts: Brass, Au or Tin plating

FEATURES

- Pin counts, single row 3 to 30 and dual row 6 to 60

PART NUMBER

FP4 - 30 * - S1 ** - *

- Series
- *Pin Count
- S = Single Row (3 to 30)
  D = Dual Row (6 to 60)
- S1 = 90° Type SMT
- Plating: Mating / Termination Area
  FF = Flash Gold / Flash Gold
  FL = Flash Gold / Tin
  LL = Tin / Tin
- T = Tube Packaging
  RC = Cap on Reel

* IMPORTANT INFO
Pin count represents total amount of pins for single or dual rows

OUTLINE DIMENSIONS

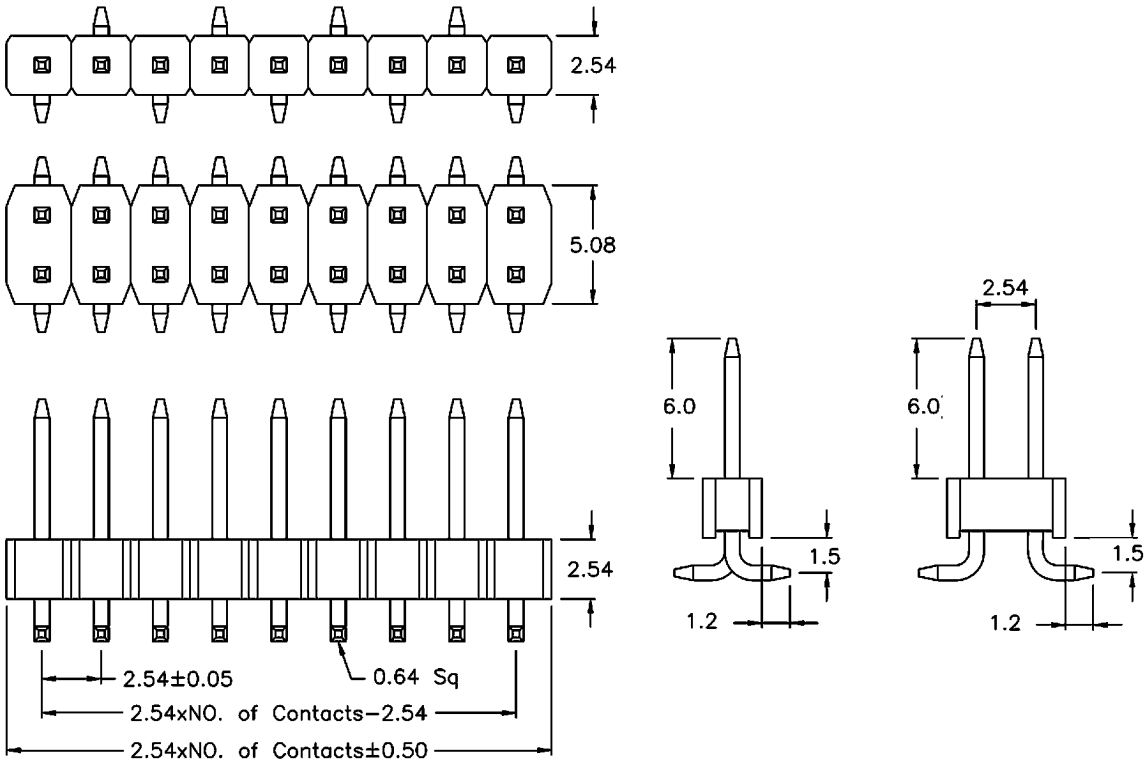

SPECIFICATIONS

Insulation Resistance:	5,000MΩ max. at 500V DC
Withstanding Voltage:	1,000V AC for 1 minute
Contact Resistance:	10mΩ max.
Current Rating:	2A
Operating Temp. Range:	-55°C to 105°C

MATERIALS AND FEATURES

Insulator: Nylon6T plated with Tin or Au
Contacts: Brass

FEATURES

- Pin counts, from 10 to 64

PART NUMBER

FP7 - 16 S1- ** - *

- Series
- Pin Count
- S1 = 180° Type SMT
- Plating:
  Mating / Termination Area
  FF = Flash Gold / Flash Gold
  FL = Flash Gold / Tin
- T = Tube Packaging
  RC = Cap on Reel

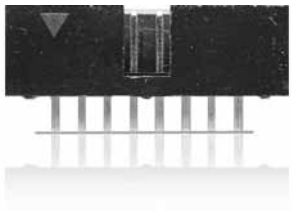

OUTLINE DIMENSIONS 180°

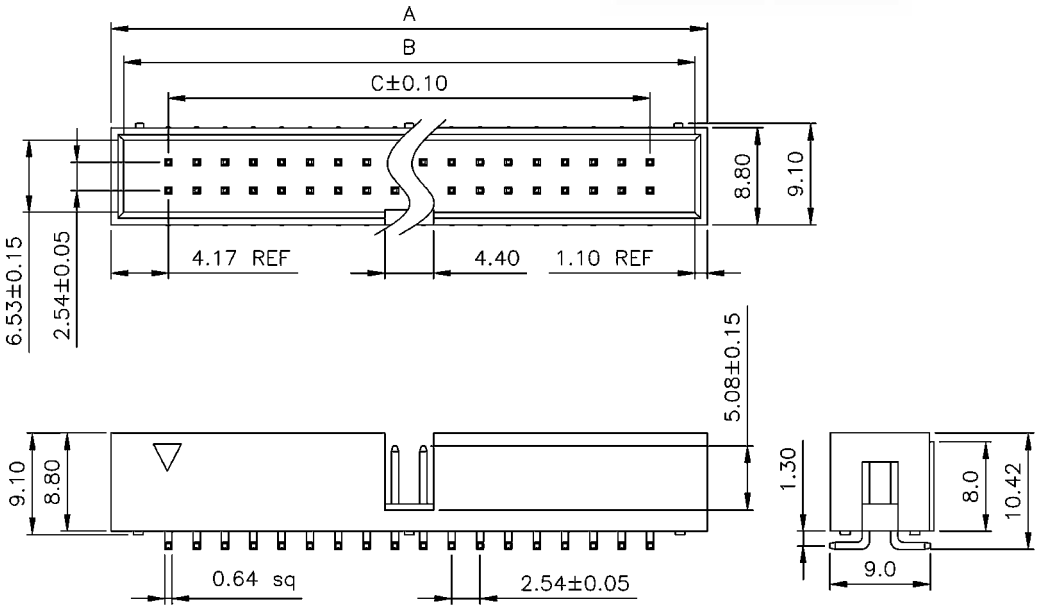

PCB LAYOUT

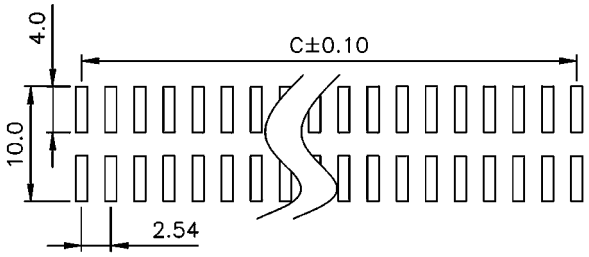

Part Number	Pin Count	A	B	C
FP7-10-S1-**-*	10	20.30	18.10	10.16
FP7-12-S1-**-*	12	22.84	20.64	12.70
FP7-14-S1-**-*	14	25.38	23.18	15.24
FP7-16-S1-**-*	16	28.00	25.70	17.78
FP7-20-S1-**-*	20	33.00	30.80	22.86
FP7-24-S1-**-*	24	38.08	35.88	27.94
FP7-26-S1-**-*	26	40.62	38.42	30.48

Part Number	Pin Count	A	B	C
FP7-30-S1-**-*	30	45.70	43.50	35.56
FP7-34-S1-**-*	34	50.78	48.58	40.64
FP7-40-S1-**-*	40	58.40	56.20	48.26
FP7-50-S1-**-*	50	71.10	68.90	60.96
FP7-60-S1-**-*	60	83.80	81.60	73.66
FP7-64-S1-**-*	64	88.88	86.68	78.74

SPECIFICATIONS

Insulation Resistance:	5,000MΩ max.
Withstanding Voltage:	500V AC for 1 minute
Contact Resistance:	20mΩ max.
Current Rating:	2A
Operating Temp. Range:	-55°C to 105°C

MATERIALS AND FINISH

Insulator: PBT, Glass filled, UL94V-0 rated
Contacts: Brass

FEATURES

- Pin counts, from 10 to 64

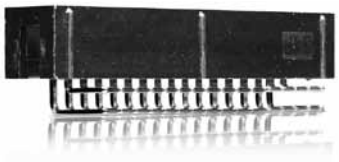

PART NUMBER

FP7 - 16 T* - ** - *

- Series
- Pin Count
- T1 = 180° Type TH
  T9 = 90° Type TH
- Plating:
  Mating / Termination Area
  FF = Flash Gold / Flash Gold
  FL = Flash Gold / Tin
  LL = Tin / Tin
- T = Tube Packaging
  RC = Cap on Reel

OUTLINE DIMENSIONS 180°

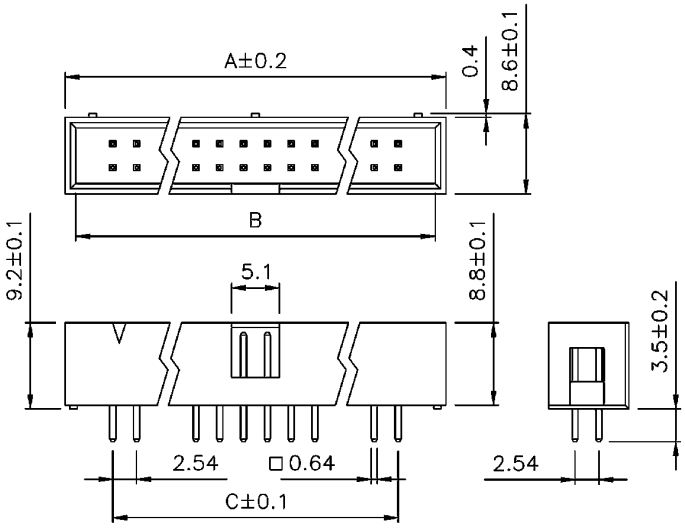

OUTLINE DIMENSIONS 90°

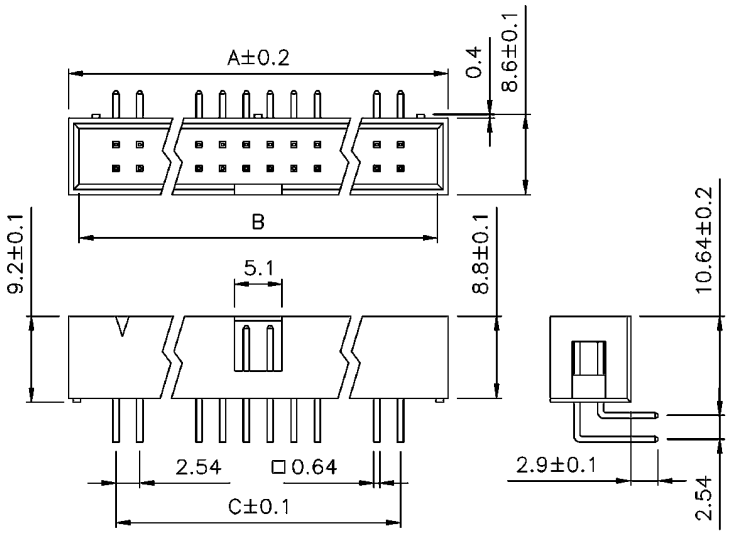

Part Number	Pin Count	A	B	C
FP7-10-T*-**-*	10	20.34	18.10	10.16
FP7-14-T*-**-*	14	25.48	23.18	15.24
FP7-16-T*-**-*	16	27.90	25.72	17.78
FP7-16-T*-**-*	16	33.05	30.80	22.86
FP7-20-T*-**-*	20	38.08	33.88	27.94
FP7-26-T*-**-*	26	40.68	38.42	30.48

Part Number	Pin Count	A	B	C
FP7-30-T*-**-*	30	45.70	43.50	35.56
FP7-34-T*-**-*	34	50.80	48.58	40.64
FP7-40-T*-**-*	40	58.46	56.20	48.26
FP7-50-T*-**-*	50	71.10	68.90	60.96
FP7-60-T*-**-*	60	83.80	81.60	73.66
FP7-64-T*-**-*	64	89.10	86.68	78.74

SPECIFICATIONS

Insulation Resistance:	3,000MΩ max.
Withstanding Voltage:	500V AC for 1 minute
Contact Resistance:	30mΩ max.
Current Rating:	2A
Operating Temp. Range:	-40°C to 105°C

MATERIALS AND FINISH

Insulator: PBT, UL94V-0 rated
Contacts: Brass

FEATURES

- Pin counts from 6 to 64

PART NUMBER

FP8 - 64 S1- * - ** - TR

- Series
- Pin Count
- S1 = 180° Type SMT
- Latches:
  1 = Short Ejector
  2 = Long Ejector
- Plating:
  Mating / Termination Area
  FF = Flash Gold / Flash Gold
  FL = Flash Gold / Tin
  LL = Tin / Tin
- TR = Tray Packaging

OUTLINE DIMENSIONS 180°

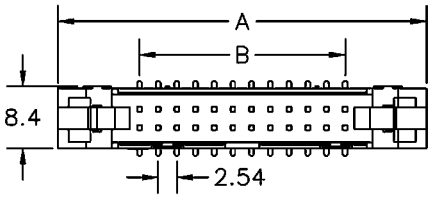

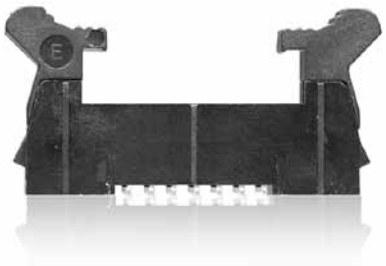

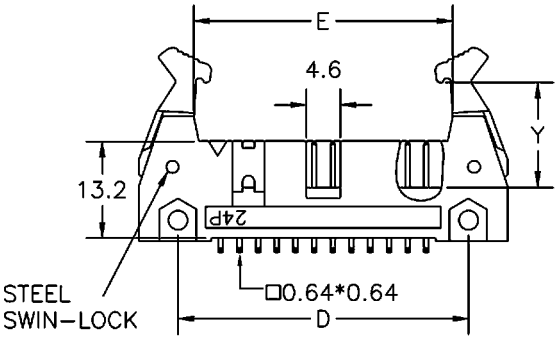

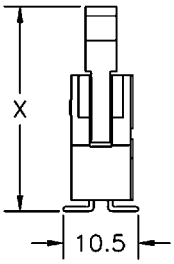

PCB LAYOUT

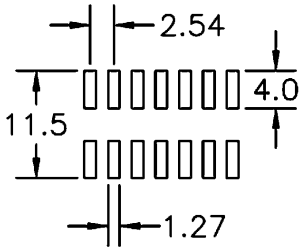

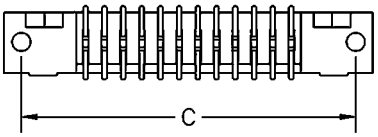

Dimensions	X	Y
Long Ejector	27.8	14.6
Short Ejector	26.2	10.6

Part Number	Pin Count	A	B	C	D	E
FP8-6-S1-*-**-TR	6	27.16	5.08	22.44	16.49	12.77
FP8-8-S1-*-**-TR	8	29.70	7.62	24.98	19.03	15.31
FP8-10-S1-*-**-TR	10	32.24	10.16	27.52	21.57	17.85
FP8-12-S1-*-**-TR	12	34.78	12.70	30.06	24.11	20.39
FP8-14-S1-*-**-TR	14	37.32	15.24	32.60	26.65	22.93
FP8-16-S1-*-**-TR	16	39.86	17.78	35.14	29.19	25.47
FP8-20-S1-*-**-TR	20	44.94	22.86	40.22	34.27	30.55
FP8-24-S1-*-**-TR	24	50.02	27.94	45.30	39.35	35.63
FP8-26-S1-*-**-TR	26	52.56	30.48	47.84	41.89	38.17
FP8-30-S1-*-**-TR	30	57.64	35.56	52.92	46.97	43.25
FP8-34-S1-*-**-TR	34	62.72	40.64	58.00	52.05	48.33
FP8-40-S1-*-**-TR	40	70.34	48.26	65.62	59.67	55.95
FP8-44-S1-*-**-TR	44	75.42	53.34	70.70	64.75	61.03
FP8-50-S1-*-**-TR	50	83.04	60.96	78.32	72.37	68.65
FP8-60-S1-*-**-TR	60	95.74	73.66	91.02	85.07	81.35
FP8-64-S1-*-**-TR	64	100.82	78.74	96.10	90.15	86.43

Trading Division

SPECIFICATIONS

Insulation Resistance:	3,000MΩ max.
Withstanding Voltage:	500V AC for 1 minute
Contact Resistance:	30mΩ max.
Current Rating:	1A
Operating Temp. Range:	-40°C to 105°C

MATERIALS AND FINISH

Insulator: PBT, glass filled UL94V-0 rated
Contacts: Phosphor Bronze, Au or Tin Plating

FEATURES

- Pin counts from 4 to 64

PART NUMBER

FS1 - 32 19 - * * - ** TR

- Series
- Pin Count
- I9 = 90° IDC
- Strain Relief
  N = Without Strain Relief
  A = With Strain Relief
- Bump
  0 = Without Bump
  1 = With Bump
- Mating / Termination
  Plating Area:
  FF = Flash Gold / Flash Gold
  FL = Flash Gold / Tin
  LL = Tin / Tin
- TR = Tray Packaging

OUTLINE DIMENSIONS

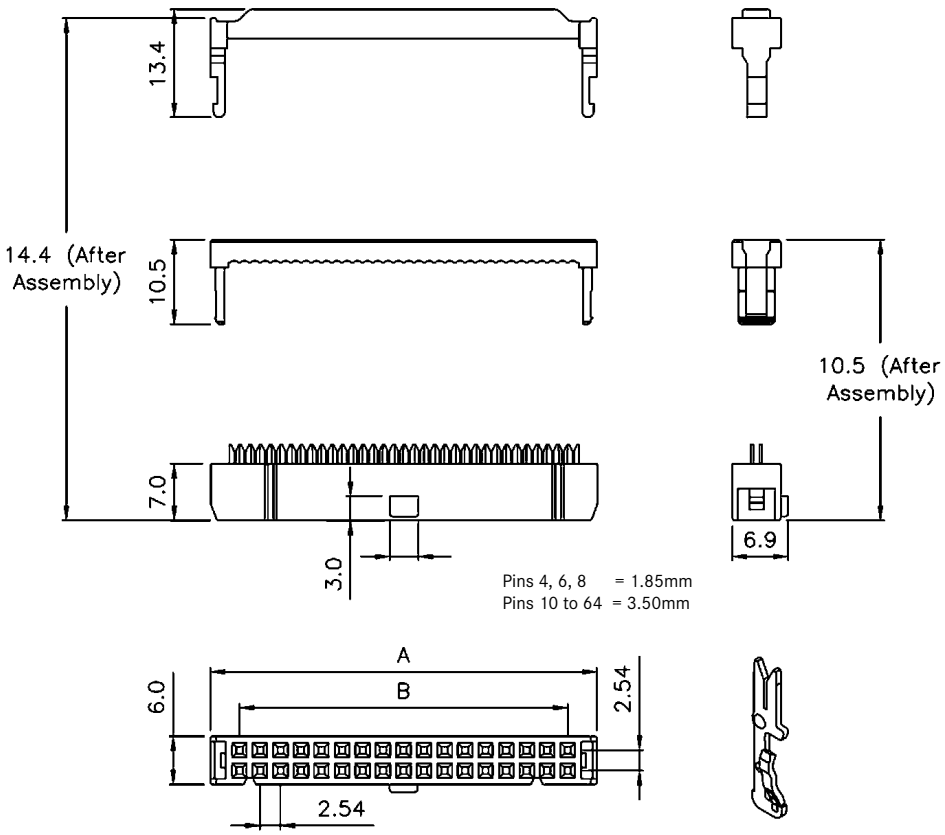

Part Number	Pin Count	A	B
FS1-4-I1-**-**-TR	4	9.78	2.54
FS1-6-I1-**-**-TR	6	12.32	5.08
FS1-8-I1-**-**-TR	8	14.86	7.62
FS1-10-I1-**-**-TR	10	17.40	10.16
FS1-12-I1-**-**-TR	12	19.94	12.70
FS1-14-I1-**-**-TR	14	22.48	15.24
FS1-16-I1-**-**-TR	16	25.02	17.78
FS1-20-I1-**-**-TR	20	30.10	22.86
FS1-22-I1-**-**-TR	24	35.18	27.94
FS1-26-I1-**-**-TR	26	37.72	30.48

Part Number	Pin Count	A	B
FS1-30-I1-**-**-TR	30	42.80	35.56
FS1-34-I1-**-**-TR	34	47.88	40.64
FS1-36-I1-**-**-TR	36	50.42	43.18
FS1-40-I1-**-**-TR	40	55.50	48.26
FS1-44-I1-**-**-TR	44	60.58	53.34
FS1-50-I1-**-**-TR	50	68.20	60.96
FS1-56-I1-**-**-TR	56	75.82	68.58
FS1-60-I1-**-**-TR	60	80.90	73.66
FS1-62-I1-**-**-TR	62	83.44	76.20
FS1-64-I1-**-**-TR	64	85.98	78.74

SPECIFICATIONS

Insulation Resistance:	5,000MΩ max.
Withstanding Voltage:	500V AC for 1 minute
Contact Resistance:	20mΩ max.
Current Rating:	3A
Operating Temp. Range:	-40°C to 105°C

MATERIALS AND FINISH

Insulator: Nylon-6T UL94V-0 rated
Contacts: Phosphor Bronze, Au or Tin Plating

FEATURES

- Pin counts from 6 to 64

PART NUMBER

FS3 - 30 * - T1 ** - *

- Series
- * Pin Count
- S = Single Row (2 to 40 pins)
  D = Dual Row (4 to 80 pins)
- T1 = 180° Type TH
- Mating / Termination Plating Area
  FF = Flash Gold / Flash Gold
  LL = Tin / Tin
- T = Tube Packaging
  RC = Cap on Reel

* IMPORTANT INFO
Pin count represents total amount of pins for single or dual rows

OUTLINE DIMENSIONS SINGLE ROW

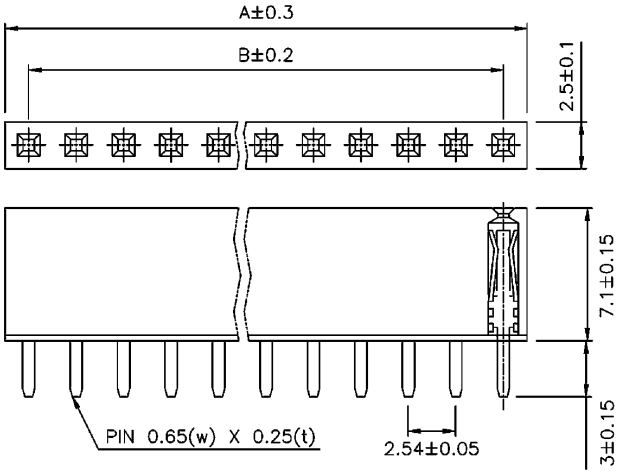

OUTLINE DIMENSIONS DUAL ROW

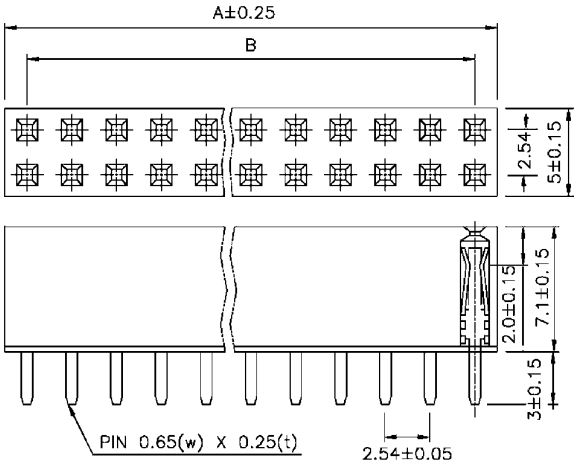

PCB LAYOUT

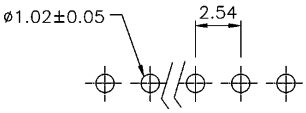

PCB LAYOUT

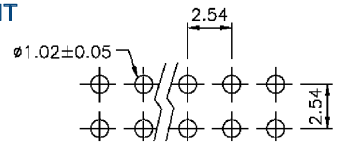

Part Number	Pin Count	A	B
FS3-2S-T1-**-*	2 / 4	5.08	2.54
FS3-3*-T1-**-*	3 / 6	7.62	5.08
FS3-4*-T1-**-*	4 / 8	10.16	7.62
FS3-5*-T1-**-*	5 / 10	12.70	10.16
FS3-6*-T1-**-*	6 / 12	15.24	12.70
FS3-7*-T1-**-*	7 / 14	17.78	15.24
FS3-8*-T1-**-*	8 / 16	20.32	17.78
FS3-9*-T1-**-*	9 / 18	22.86	20.32
FS3-10*-T1-**-*	10 / 20	25.40	22.86
FS3-11*-T1-**-*	11 / 22	27.94	25.40
FS3-12*-T1-**-*	12 / 24	30.48	27.94
FS3-13*-T1-**-*	13 / 26	33.02	30.48
FS3-14*-T1-**-*	14 / 28	35.56	33.02
FS3-15*-T1-**-*	15 / 30	38.10	35.56
FS3-16*-T1-**-*	16 / 32	40.64	38.10
FS3-17*-T1-**-*	17 / 34	43.18	40.64
FS3-18*-T1-**-*	18 / 36	45.72	43.18
FS3-19*-T1-**-*	19 / 38	48.26	45.72
FS3-20*-T1-**-*	20 / 40	50.80	48.26
FS3-21*-T1-**-*	21 / 42	53.34	50.80

Part Number	Pin Count	A	B
FS3-22*-T1-**-*	22 / 44	55.88	53.34
FS3-23*-T1-**-*	23 / 46	58.42	55.88
FS3-24*-T1-**-*	24 / 48	60.96	58.42
FS3-25*-T1-**-*	25 / 50	63.50	60.96
FS3-26*-T1-**-*	26 / 52	66.04	63.50
FS3-27*-T1-**-*	27 / 54	68.58	66.00
FS3-28*-T1-**-*	28 / 56	71.12	68.58
FS3-29*-T1-**-*	29 / 58	73.66	71.12
FS3-30*-T1-**-*	30 / 60	76.20	73.66
FS3-31*-T1-**-*	31 / 62	78.74	76.20
FS3–32*-T1-**-*	32 / 64	81.28	78.74
FS3-33*-T1-**-*	33 / 66	83.82	81.28
FS3-34*-T1-**-*	34 / 68	86.36	83.82
FS3–35*-T1-**-*	35 / 70	88.90	86.36
FS3–36*-T1-**-*	36 / 72	91.44	88.90
FS3-37*-T1-**-*	37 / 74	93.98	91.44
FS3-38*-T1-**-*	38 / 76	96.52	93.98
FS3-39*-T1-**-*	39 / 78	99.06	96.52
FS3-40*-T1-**-*	40 / 80	101.60	99.06

SPECIFICATIONS

Insulation Resistance:	5,000MΩ max.
Withstanding Voltage:	500V AC for 1 minute
Contact Resistance:	20mΩ max.
Current Rating:	3A
Operating Temp. Range:	-40°C to 105°C

MATERIALS AND FINISH

Insulator: Nylon-6T UL94V-0 rated
Contacts: Phosphor Bronze, Au or Tin Plating

FEATURES

- Pin counts, single row 3 to 40 and dual row 6 to 60

PART NUMBER

FS5 - 40 * - S1 ** - *

- Series
- *Pin Count
- S = Single Row (3 to 40 pins)
  D = Dual Row (6 to 60 pins)
- S1 = 180° Type SMT
- Mating / Termination
  Plating Area:
  FF = Flash Gold / Flash Gold
  LL = Tin / Tin
- T = Tube Packaging
  RC = Cap on Reel

* IMPORTANT INFO
Pin count represents total amount of pins for single or dual rows

OUTLINE DIMENSIONS SINGLE ROW

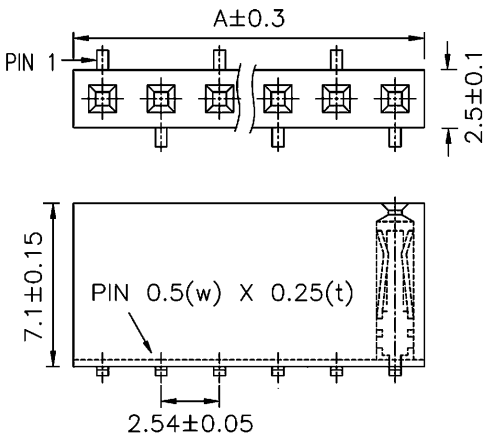

PCB LAYOUT

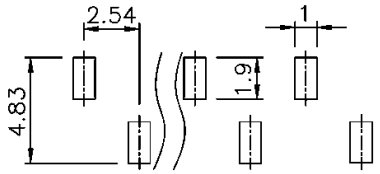

OUTLINE DIMENSIONS DUAL ROW

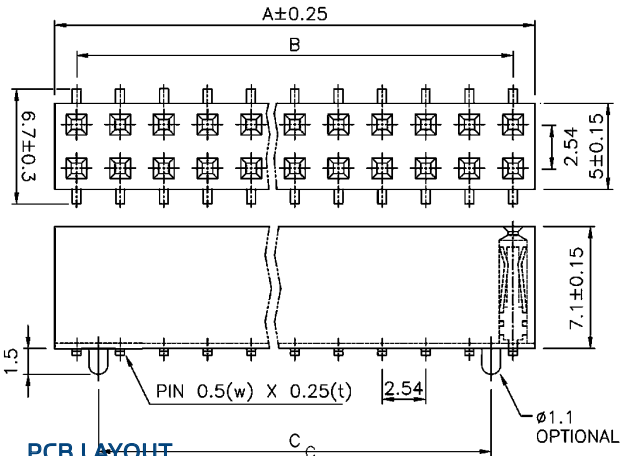

PCB LAYOUT

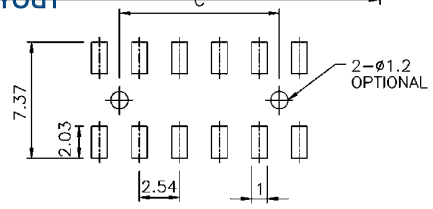

Part Number	Pin Count	A	B	C
FS5-3*-S1-**-*	3 / 6	7.62	5.08	2.54
FS5-4*-S1-**-*	4 / 8	10.16	7.62	5.08
FS5-5*-S1-**-*	5 / 10	12.70	10.16	7.62
FS5-6*-S1-**-*	6 / 12	15.24	12.70	10.16
FS5-7*-S1-**-*	7 / 14	17.78	15.24	12.70
FS5-8*-S1-**-*	8 / 16	20.32	17.78	15.24
FS5-9*-S1-**-*	9 / 18	22.86	20.32	17.78
FS5-10*-S1-**-*	10 / 20	25.40	22.86	20.32
FS5-11*-S1-**-*	11 / 22	27.94	25.40	22.86
FS5-12*-S1-**-*	12 / 24	30.48	27.94	25.40
FS5-13*-S1-**-*	13 / 26	33.02	30.48	27.94
FS5-14*-S1-**-*	14 / 28	35.56	33.02	30.48
FS5-15*-S1-**-*	15 / 30	38.10	35.56	33.02
FS5-16*-S1-**-*	16 / 32	40.64	38.10	35.56
FS5-17*-S1-**-*	17 / 34	43.18	40.64	38.10
FS5-18*-S1-**-*	18 / 36	45.72	43.18	40.64
FS5-19*-S1-**-*	19 / 38	48.26	45.72	43.18

Part Number	Pin Count	A	B	C
FS5-22*-S1-**-*	22 / 44	55.88	53.34	50.80
FS5-23*-S1-**-*	23 / 46	58.42	55.88	53.34
FS5-24*-S1-**-*	24 / 48	60.96	58.42	55.88
FS5-25*-S1-**-*	25 / 50	63.50	60.96	58.42
FS5-26*-S1-**-*	26 / 52	66.04	63.50	60.96
FS5-27*-S1-**-*	27 / 54	68.58	66.04	63.50
FS5-28*-S1-**-*	28 / 56	71.12	68.58	66.04
FS5-29*-S1-**-*	29 / 58	73.66	71.12	68.58
FS5-30*-S1-**-*	30 / 60	76.20	73.66	71.12
FS5-31S-S1-**-*	31	78.74	76.20	-
FS5-32*-S1-**-*	32	81.28	78.74	-
FS5-33S-S1-**-*	33	83.82	81.28	-
FS5-34*-S1-**-*	34	86.36	83.82	-
FS5-35S-S1-**-*	35	88.90	86.36	-
FS5-36*-S1-**-*	36	91.44	88.90	-
FS5-37S-S1-**-*	37	93.98	91.44	-
FS5-38*-S1-**-*	38	96.52	93.98	-

SPECIFICATIONS

Voltage Rating:	150V AC
Current Rating:	1.5A
Operating Temp. Range:	–40°C to +105°C
Withstanding Voltage:	500V for 1 minute

MATERIALS AND FINISH

Housing:	High temp plastic, UL 94V-0 listed
Terminals:	Phosphor Bronze
Contact Plating:	Gold plated

PART NUMBER

ZJ1 - * - ** - G 1

Series No.

O = Open Top
C = Closed Top

Height of Insulator:
35 = 3.48 mm
50 = 4.95 mm

Plating: G = Gold

*Color:
1 = Black (Standard) 2 = Red 3 = Yellow
4 = Green 5 = Blue 7 = White

*INFO: All colored mini-jumbers have a min. order quantity of 45,000 pcs (black has no min. quantity)

OUTLINE DIMENSIONS FOR OPEN TOP

Height of insulator: 3.48 mm

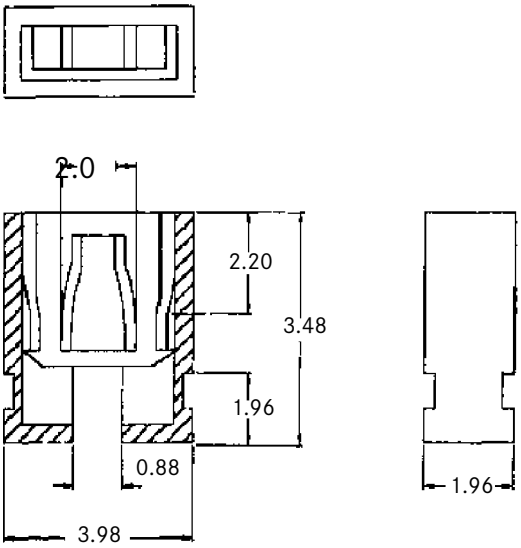

OUTLINE DIMENSIONS FOR CLOSED TOP

Height of insulator: 4.95 mm

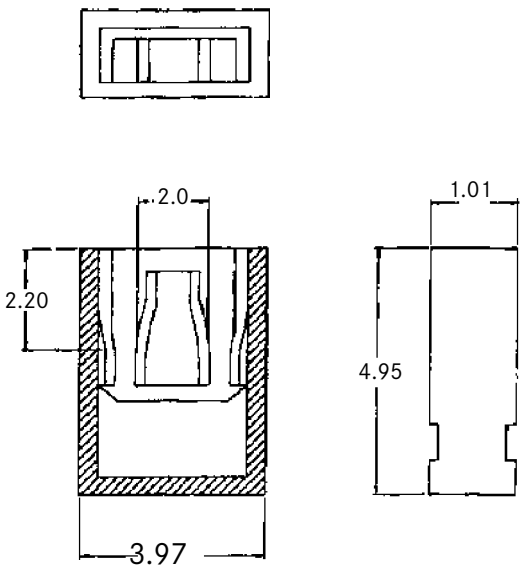

SPECIFICATIONS

Voltage Rating:	150V AC
Current Rating:	1.0A
Operating Temp. Range:	–40°C to +105°C
Withstanding Voltage:	500V for 1 minute
Insulation Resistance:	1,000MΩ min. at 500V DC

MATERIALS AND FINISH

Housing:	PBT, UL 94V-0 listed
Terminals:	Phosphor Bronze
Contact Plating:	Tin plated

FEATURES

- Pin count from 8 to 60

PART NUMBER

ZP1 - ** - T

- Series No.
- No. of Contact Pins (8 to 60)
- Plating: T = Tin

Applicable Cables
AWG 28 stranded wire, 1.00mm pitch
(e.g. DK**-1.0*, see Section Cables)

OUTLINE CONNECTOR DIMENSIONS

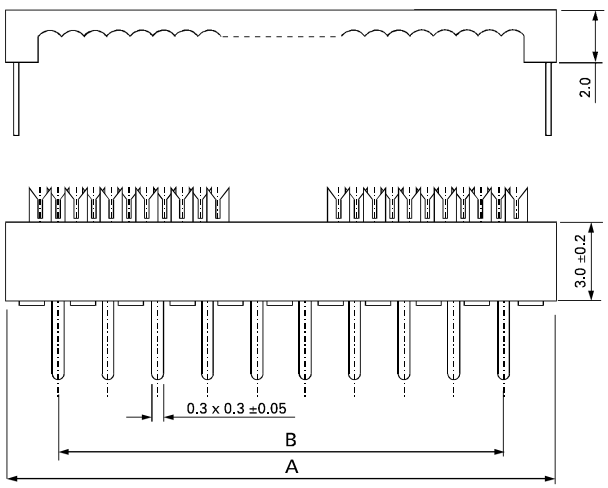

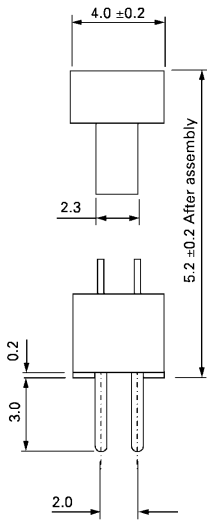

RECOMMENDED PCB LAYOUT

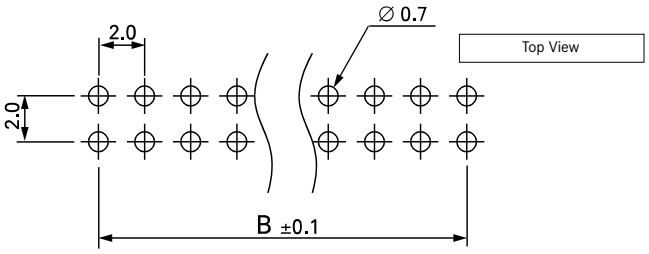

Part Number	A	B
ZP1-08-T	12.16	8.0
ZP1-10-T	14.16	8.0
ZP1-12-T	16.16	10.0
ZP1-14-T	18.16	12.0
ZP1-16-T	20.16	14.0
ZP1-18-T	22.16	16.0
ZP1-20-T	24.16	18.0
ZP1-22-T	26.16	20.0
ZP1-24-T	28.16	22.0
ZP1-26-T	30.16	24.0
ZP1-28-T	32.16	26.0

Part Number	A	B
ZP1-30-T	34.16	28.0
ZP1-32-T	36.16	30.0
ZP1-34-T	38.16	32.0
ZP1-36-T	40.16	34.0
ZP1-40-T	44.16	38.0
ZP1-44-T	48.16	42.0
ZP1-50-T	54.16	48.0
ZP1-54-T	58.16	52.0
ZP1-56-T	60.16	54.0
ZP1-60-T	64.16	58.0

SERIES ZP2 VARIOUS PIN HEADERS WITH 1.5MM BASE

SPECIFICATIONS

Contact Resistance:	20mΩ max.
Insulation Resistance:	5,000 Ω min.
Current Rating:	1.0A
Operating Temp. Range:	–65°C to +125°C
Soldering Temp.:	230°C / 3 sec.

MATERIALS AND FINISH

Housing:	High-temp. plastic, UL 94V-0 listed
Terminals:	Brass
Contact Plating:	Gold over Ni

FEATURES

- Pin count from 2 to 80 (Single Row)
- Pin count from 4 to 80 (Dual Row)

PART NUMBER

ZP2 - H* - ** - G

Series No.

Styles H1 to H4:
H1 = Straight Single Row
H2 = Straight Dual Row
H3 = Right Angle Single Row
H4 = Right Angle Dual Row

No. of Contact Pins:
2 to 80 (Single Row)
4 to 80 (Dual Row)

Plating: G = Gold Flash

OUTLINE CONNECTOR DIMENSIONS

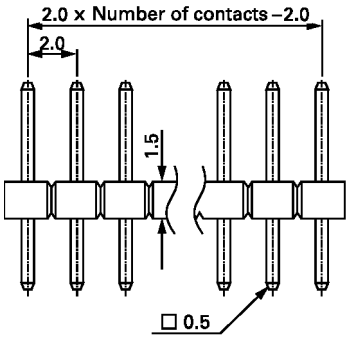

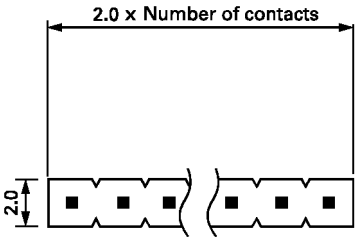

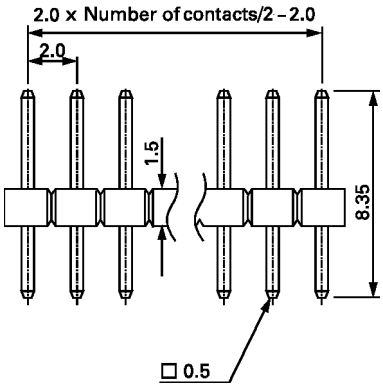

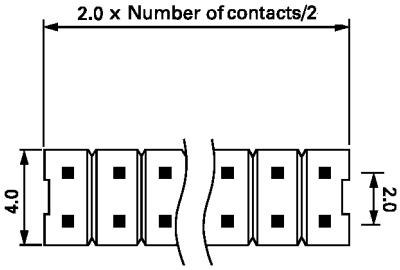

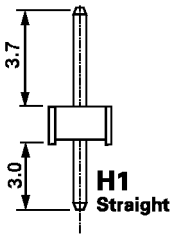

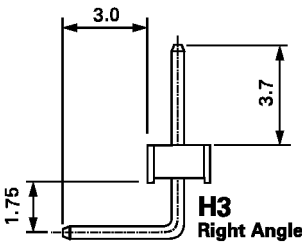

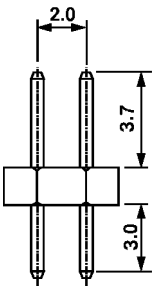

H2
Straight

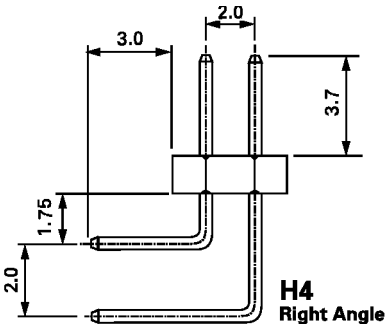

Trading Division

SPECIFICATIONS

Voltage Rating:	150V AC
Current Rating:	1.5A
Operating Temp. Range:	-40°C to +105°C
Withstanding Voltage:	500V for 1 minute
Soldering Temp.:	220°C min. / 60 sec., 250°C peak

MATERIALS AND FINISH

Housing	UL 94V-0 listed
Terminals:	Brass
Contact Plating:	Gold over Nickel

FEATURES

- Pin count from 8 to 60

PART NUMBER

ZP4 - *** - ** - G2

- Series No.
- Plastic Height (see table)
- No. of Contact Pins (8 to 60)
- Mating Face Plating: G2 = Gold Flash

OUTLINE CONNECTOR DIMENSIONS

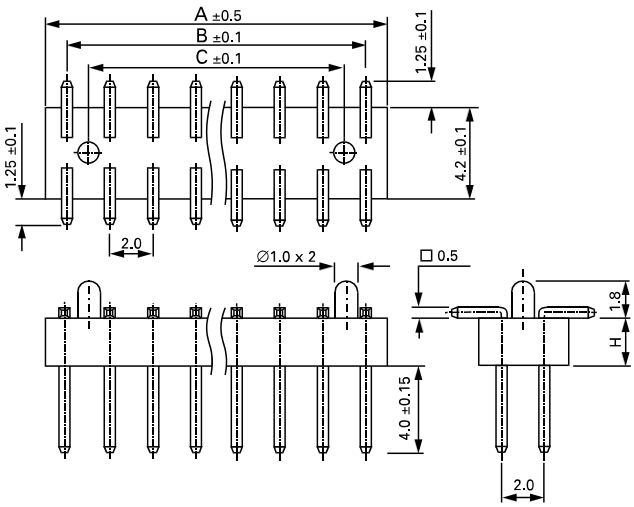

Part Number	A	B	C
ZP4-***-08-G2	8.0	6.0	4.0
ZP4-***-10-G2	10.0	8.0	6.0
ZP4-***-12-G2	12.0	10.0	8.0
ZP4-***-14-G2	14.0	12.0	10.0
ZP4-***-16-G2	16.0	14.0	12.0
ZP4-***-18-G2	18.0	16.0	14.0
ZP4-***-20-G2	20.0	18.0	16.0
ZP4-***-22-G2	22.0	20.0	18.0
ZP4-***-24-G2	24.0	22.0	20.0
ZP4-***-26-G2	26.0	24.0	22.0
ZP4-***-28-G2	28.0	26.0	24.0
ZP4-***-30-G2	30.0	28.0	26.0
ZP4-***-32-G2	32.0	30.0	28.0
ZP4-***-34-G2	34.0	32.0	30.0
ZP4-***-36-G2	36.0	34.0	32.0
ZP4-***-38-G2	38.0	36.0	34.0
ZP4-***-40-G2	40.0	38.0	36.0
ZP4-***-42-G2	42.0	40.0	38.0
ZP4-***-44-G2	44.0	42.0	40.0
ZP4-***-46-G2	46.0	44.0	42.0
ZP4-***-48-G2	48.0	46.0	44.0
ZP4-***-50-G2	50.0	48.0	46.0
ZP4-***-52-G2	52.0	50.0	48.0
ZP4-***-54-G2	54.0	52.0	50.0
ZP4-***-56-G2	56.0	54.0	52.0
ZP4-***-58-G2	58.0	56.0	54.0
ZP4-***-60-G2	60.0	58.0	56.0

RECOMMENDED PCB LAYOUT

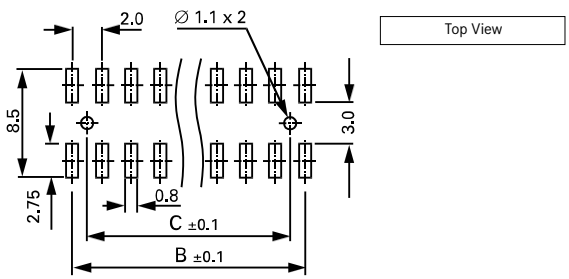

Part Numbers for Plastic Heights and Available Corresponding Pin Counts

Part Number	H	Available Pin Counts
ZP4-080-**-G2	1.5	8, 10, 12, 14, 16, 18, 20, 22, 24, 26, 30, 32, 40, 50, 60
ZP4-085-**-G2	2.0	8, 12, 16, 32, 36
ZP4-090-**-G2	2.5	8, 12
ZP4-095-**-G2	3.0	4, 12, 14, 16, 36, 44
ZP4-100-**-G2	3,5	8, 24
ZP4-105-**-G2	4.0	8, 10, 12, 16, 26, 34
ZP4-110-**-G2	4.5	16, 18, 24, 30, 50, 60
ZP4-115-**-G2	5.0	8, 12, 20, 28, 30, 34, 50, 60
ZP4-120-**-G2	5.5	12, 20, 30
ZP4-125-**-G2	6.0	10

Part Number	H	Available Pin Counts
ZP4-130-**-G2	6.5	4, 8, 10, 20
ZP4-135-**-G2	7.0	24, 36
ZP4-140-**-G2	7.5	26
ZP4-145-**-G2	8.0	8,40, 50
ZP4-150-**-G2	8.5	14
ZP4-155-**-G2	9.0	20
ZP4-160-**-G2	9.5	14, 16, 20
ZP4-165-**-G2	10.0	10, 16, 30, 40
ZP4-170-**-G2	10.5	30
ZP4-175-**-G2	11.0	8, 12, 16, 20, 44

SPECIFICATIONS

Contact Resistance:	30mΩ
Insulation Resistance:	3,000MΩ min.
Current Rating:	1A
Operating Temp. Range:	–40°C to +105°C
Withstanding Voltage:	500V AC for 1 minute
Soldering Temp.:	260°C / 3 sec.

MATERIALS AND FINISH

Housing:	LCP glass reinforced, UL 94V-0
Terminals:	Phosphor Bronze or Brass
Contact Plating:	Gold Flash or Selective Gold

FEATURES

- Pin count from 6 to 68
- Mates with ZS1 and ZS1N Series

PART NUMBER

ZP7 - ** - * - *

- Series No.
- No. of Contact Pins
- Terminal Style:
  A = 90° (TH)
  S = 180° (TH)
- Mating Face Plating:
  G = Gold Flash
  G2T = Selective Gold

OUTLINE CONNECTOR DIMENSIONS

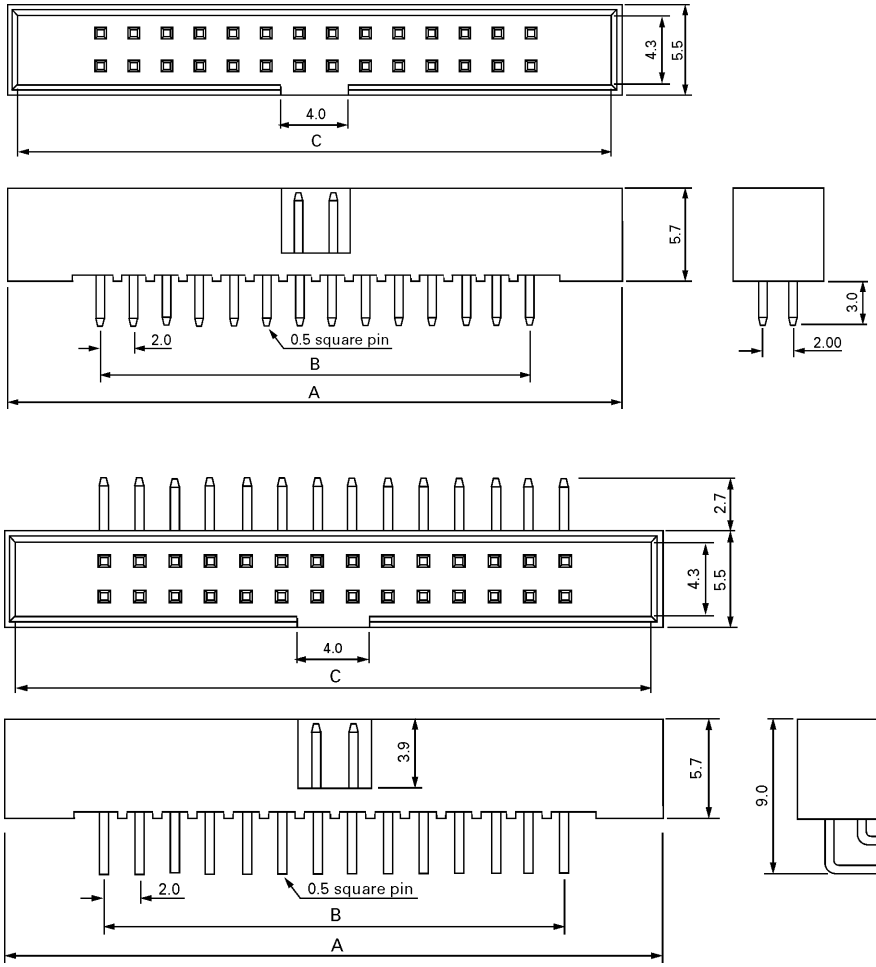

RECOMMENDED PCB LAYOUTS

PCB for 90° and 180° TH

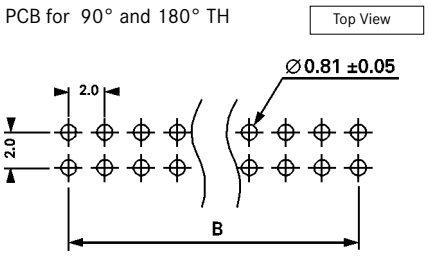

Part Number	A	B	C
ZP7-6-*-*	13.10	4.00	12.10
ZP7-8-*-*	15.10	6.00	14.10
ZP7-10-*-*	17.10	8.00	16.10
ZP7-12-*-*	19.10	10.00	18.10
ZP7-14-*-*	21.10	12.00	20.10
ZP7-16-*-*	23.10	14.00	22.10
ZP7-20-*-*	27.10	18.00	26.10
ZP7-22-*-*	29.10	20.00	28.10

Part Number	A	B	C
ZP7-26-*-*	33.10	24.00	32.10
ZP7-30-*-*	37.10	28.00	36.10
ZP7-34-*-*	41.10	32.00	40.10
ZP7-36-*-*	43.10	34.00	42.10
ZP7-40-*-*	47.10	38.00	46.10
ZP7-44-*-*	51.10	42.00	50.10
ZP7-50-*-*	57.10	48.00	56.10
ZP7-68-*-*	75.10	66.00	74.10

SPECIFICATIONS

Contact Resistance:	30mΩ
Insulation Resistance:	5,000MΩ min. at 500V DC
Current Rating:	1.5A
Operating Temp. Range:	-40°C to +105°C
Withstanding Voltage:	500V AC for 1 minute
Soldering Temp.:	220°C min. / 60 sec., 250°C peak

MATERIALS AND FINISH

Housing:	Nylon 6T, UL 94V-0
Terminals:	Bronze or Phosphor Bronze
Contact Plating:	Gold Flash

FEATURES

- Pin count from 4 to 68
- Mates with ZS1 and ZS1N Series

PART NUMBER

ZP7 - ** - SS - G

- Series No.
- No. of Contact Pin
- Terminal Style: SS = 180° (SMT)
- Mating Face Plating: G = Gold Flash

OUTLINE CONNECTOR DIMENSIONS

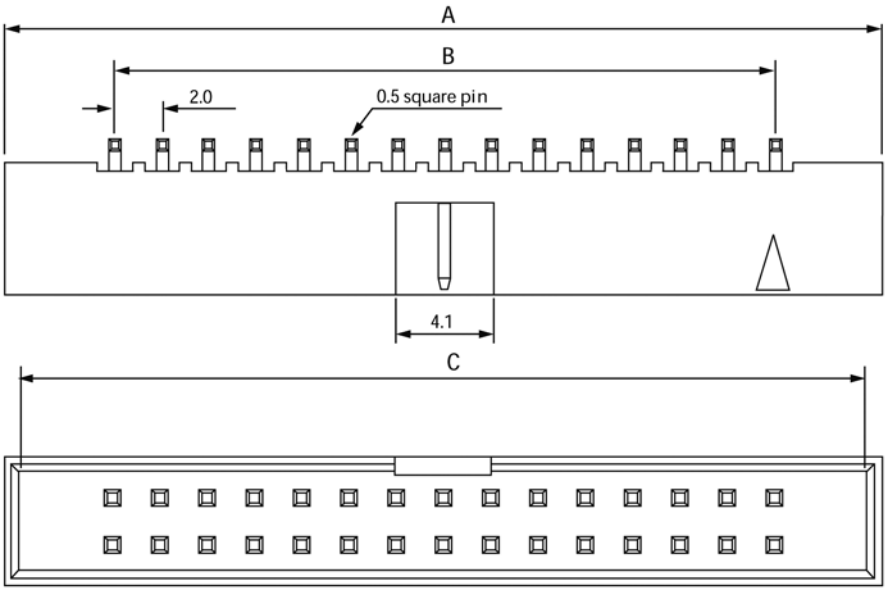

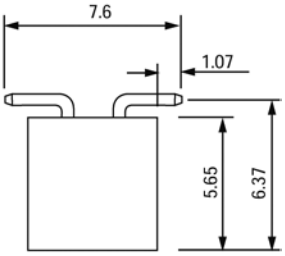

RECOMMENDED PCB LAYOUTS

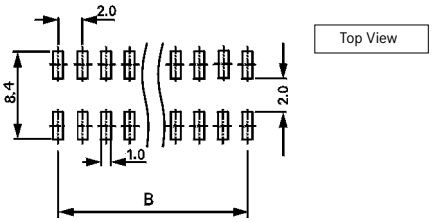

Part Number	A	B	C
ZP7-6-SS-G	13.06	4.00	11.90
ZP7-8-SS-G	15.06	6.00	13.90
ZP7-10-SS-G	17.06	8.00	15.90
ZP7-12-SS-G	19.06	10.00	17.90
ZP7-14-SS-G	21.06	12.00	19.90
ZP7-16-SS-G	23.06	14.00	21.90
ZP7-18-SS-G	25.06	16.00	23.90
ZP7-20-SS-G	27.06	20.00	25.90
ZP7-22-SS-G	29.06	20.00	27.90
ZP7-24-SS-G	31.06	22.00	29.90
ZP7-26-SS-G	33.06	24.00	31.90

Part Number	A	B	C
ZP7-28-SS-G	35.06	26.00	33.90
ZP7-30-SS-G	37.06	28.00	35.90
ZP7-32-SS-G	39.06	30.00	37.90
ZP7-34-SS-G	41.06	32.00	39.90
ZP7-36-SS-G	43.06	34.00	41.90
ZP7-40-SS-G	47.06	38.00	45.90
ZP7-44-SS-G	51.06	42.00	49.90
ZP7-50-SS-G	57.06	48.00	55.90
ZP7-60-SS-G	67.06	58.00	65.90
ZP7-64-SS-G	71.06	62.00	69.90
ZP7-68-SS-G	75.06	66.00	73.90

SPECIFICATIONS

Voltage Rating:	150V AC
Current Rating:	1.0A
Operating Temp. Range:	–40°C to +105°C
Withstanding Voltage:	500V for 1 minute
Soldering Temp.:	260°C / 3 sec.

MATERIALS AND FINISH

Housing:	UL 94V-0 listed
Terminals:	Brass
Contact Plating:	Selective Gold over Nickel

FEATURES

- Pin count from 10 to 68

PART NUMBER

ZP8 - ** - G2T

- Series No.
- No. of Contact Pins
- Plating: G2T = Selective Gold

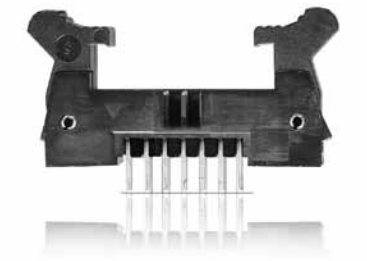

OUTLINE CONNECTOR DIMENSIONS

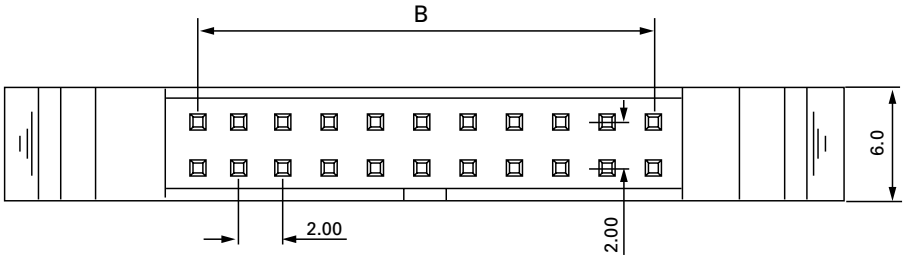

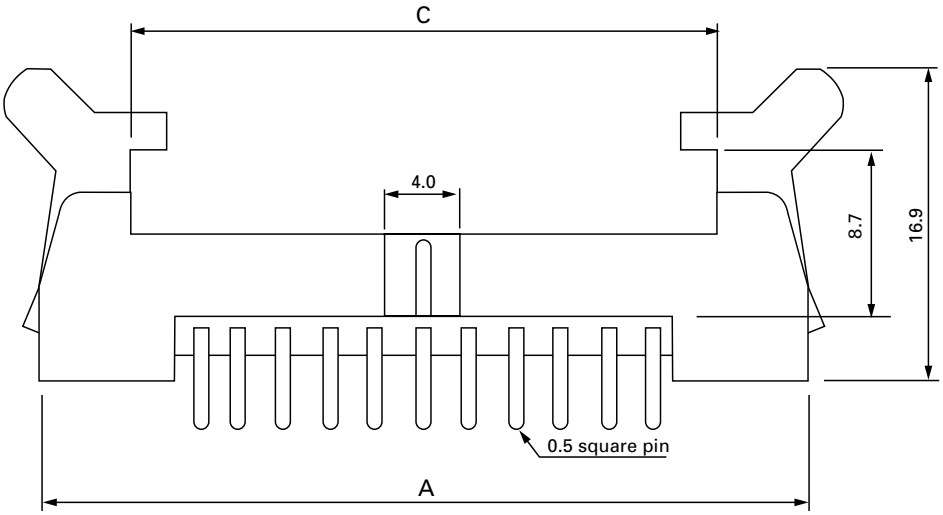

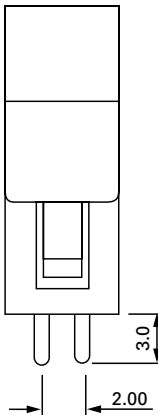

RECOMMENDED PCB LAYOUTS

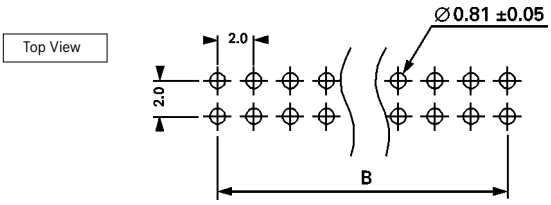

Part Number	A	B	C
ZP8-10-G2T	25.7	8.0	15.8
ZP8-12-G2T	27.7	10.0	17.8
ZP8-14-G2T	29.7	12.0	19.8
ZP8-16-G2T	31.7	14.0	21.8
ZP8-20-G2T	35.7	18.0	25.8
ZP8-22-G2T	37.7	20.0	27.8
ZP8-24-G2T	39.7	22.0	29.8

Part Number	A	B	C
ZP8-26-G2T	41.7	24.0	31.8
ZP8-30-G2T	45.7	28.0	35.8
ZP8-34-G2T	49.7	32.0	39.8
ZP8-40-G2T	55.7	38.0	45.8
ZP8-44-G2T	59.7	42.0	49.8
ZP8-50-G2T	65.7	48.0	55.8
ZP8-68-G2T	83.7	66.0	73.8

SPECIFICATIONS

Voltage Rating:	150V AC
Current Rating:	1.0A
Operating Temp. Range:	–40°C to +105°C
Withstanding Voltage:	500V for 1 minute
Soldering Temp.:	220°C min. / 60 sec., 250°C peak

MATERIALS AND FINISH

Housing:	UL 94V-0 listed
Terminals:	Brass
Contact Plating:	Selective Gold over Nickel

FEATURES

- Pin count from 10 to 68

PART NUMBER

ZP9 - ** - G2T

- Series No.
- No. of Contact Pins
- Plating: G2T = Selective Gold

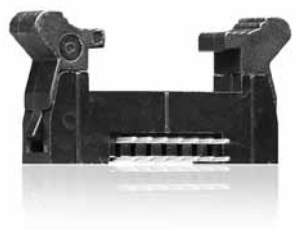

OUTLINE CONNECTOR DIMENSIONS

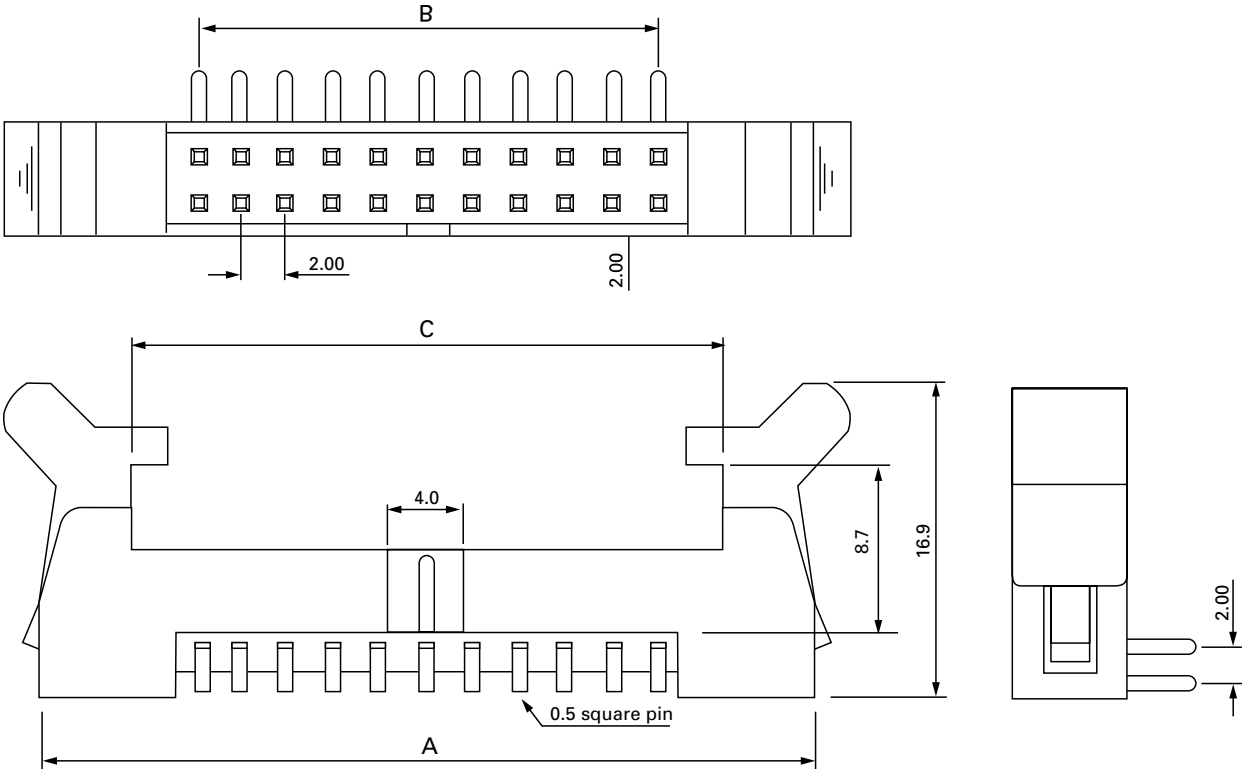

RECOMMENDED PCB LAYOUTS

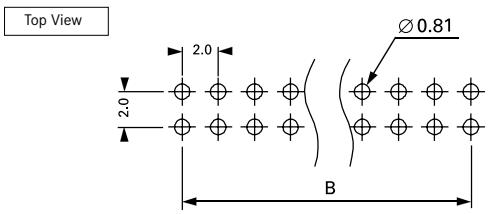

Part Number	A	B	C
ZP9-10-G2T	25.7	8.0	15.8
ZP9-12-G2T	27.7	10.0	17.8
ZP9-14-G2T	29.7	12.0	19.8
ZP9-16-G2T	31.7	14.0	21.8
ZP9-20-G2T	35.7	18.0	25.8
ZP9-22-G2T	37.7	20.0	27.8
ZP9-24-G2T	39.7	22.0	29.8

Part Number	A	B	C
ZP9-26-G2T	41.7	24.0	31.8
ZP9-30-G2T	45.7	28.0	35.8
ZP9-34-G2T	49.7	32.0	39.8
ZP9-40-G2T	55.7	38.0	45.8
ZP9-44-G2T	59.7	42.0	49.8
ZP9-50-G2T	65.7	48.0	55.8
ZP9-68-G2T	83.7	66.0	73.8

SPECIFICATIONS

Insulation Resistance:	1,000MΩ min at 500 V DC
Current Rating:	1.5A
Operating Temp. Range:	–55°C to +105°C
Withstanding Voltage:	500V for 1 minute

MATERIALS AND FINISH

Insulator:	PBT, glass filled UL 94V-0
Terminals:	Phosphor Bronze
Plating:	Selective Gold

FEATURES

- Pin count from 6 to 68

APPLICABLE CABLES

AWG 28 stranded wire, 1.00mm pitch
(e.g. DK**-1.0*, see Cables)

PART NUMBER

ZS1 * - ** N - S

- Series No.
- No mark = without polarization; N = with polarization
- No. of Contact Pins
- N = No Strain Relief
- Selective Plating: S = Selective Au

OUTLINE CONNECTOR DIMENSIONS

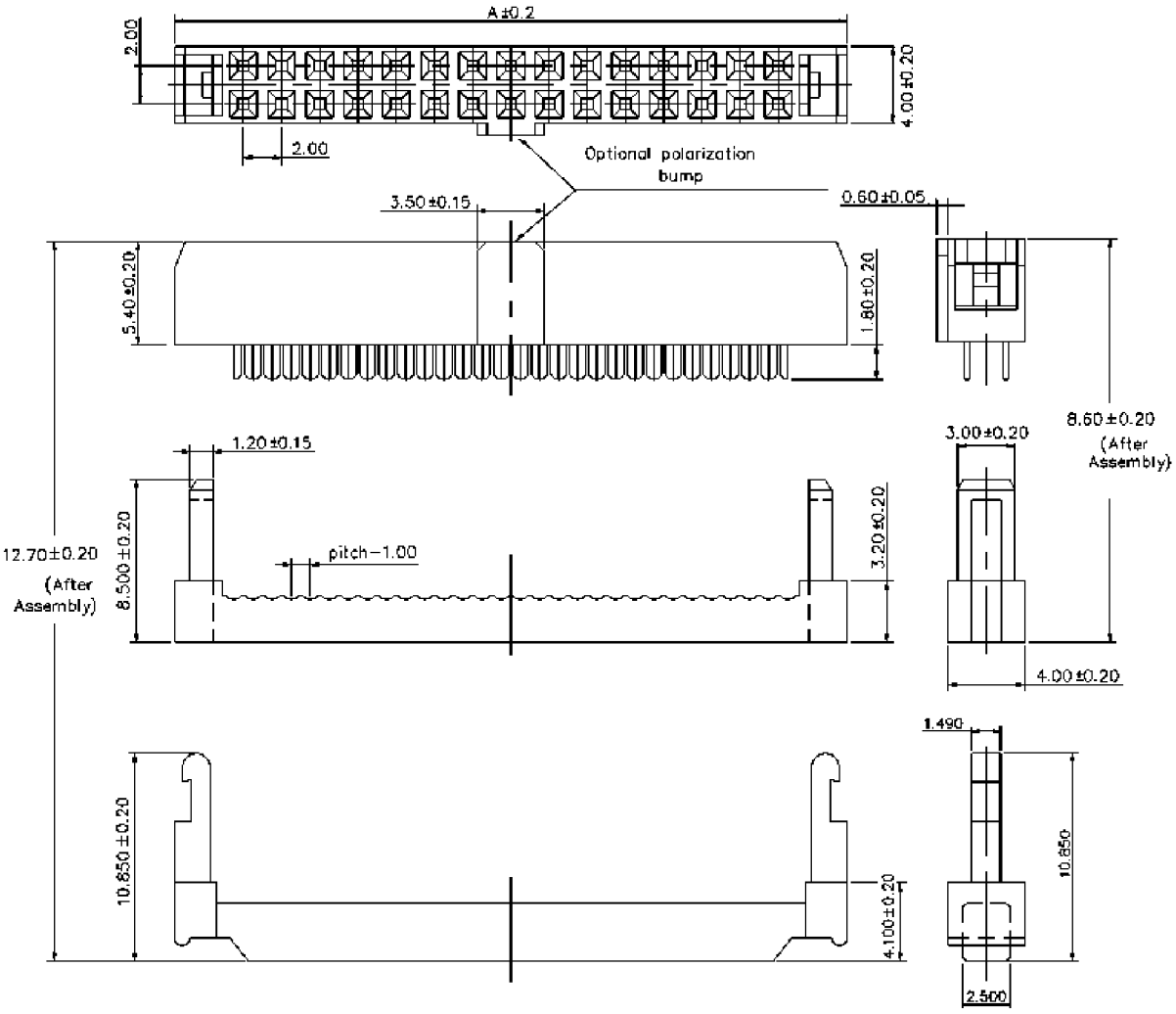

Part Number	A
ZS1*-06N-S	11.20
ZS1*-08N-S	13.20
ZS1*-10N-S	15.20
ZS1*-12N-S	17.20
ZS1*-14N-S	19.20
ZS1*-16N-S	21.20
ZS1*-18N-S	23.20

Part Number	A
ZS1*-20N-S	25.20
ZS1*-22N-S	27.20
ZS1*-24N-S	29.20
ZS1*-26N-S	31.20
ZS1*-28N-S	33.20
ZS1*-30N-S	35.20
ZS1*32N-S	37.20

Part Number	A
ZS1*-34N-S	39.20
ZS1*-36N-S	41.20
ZS1*-40N-S	45.20
ZS1*-44N-S	49.20
ZS1*-50N-S	55.20
ZS1*-68N-S	73.20

SPECIFICATIONS

Contact Resistance:	30mΩ max.
Insulation Resistance:	3,000MΩ min at 500V
Current Rating:	1A
Withstanding Voltage:	500V AC for 1 minute
Operating Temp. Range:	-40°C to +105°C
Soldering Temp.:	230°C / 3 sec.

MATERIALS AND FINISH

Insulator:	Nylon 66, glass reinforced, UL 94V-0 rated
Terminals:	Phosphor Bronze
Contact Plating:	Au Flash

FEATURES

- Pin count from 4 to 80

PART NUMBER

ZS3A - ** G2

- Series No.
- No. of Contact Pins: (4 to 80)
- Mating Face Plating: G2 = Gold Flash

OUTLINE CONNECTOR DIMENSIONS

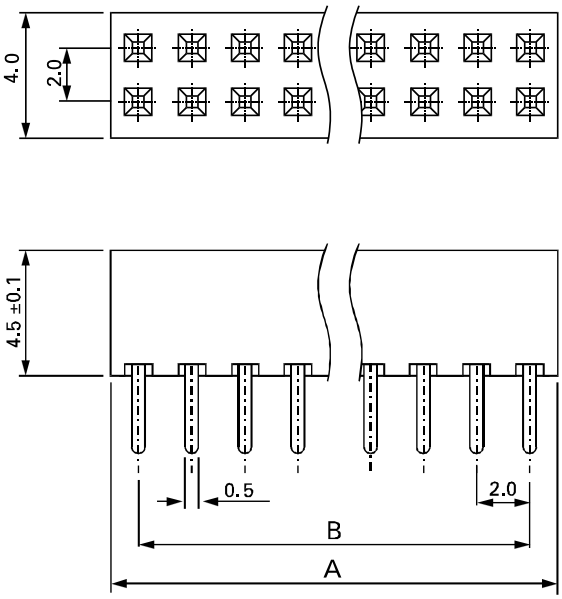

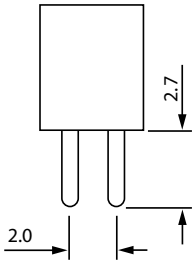

RECOMMENDED PCB LAYOUT

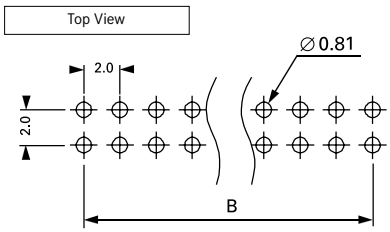

Part Number	A	B
ZS3A-04-G2	4.5	2.0
ZS3A-06-G2	6.5	4.0
ZS3A-08-G2	8.5	6.0
ZS3A-10-G2	10.5	8.0
ZS3A-12-G2	12.5	10.0
ZS3A-14-G2	14.5	12.0
ZS3A-16-G2	16.5	14.0
ZS3A-18-G2	18.5	16.0
ZS3A-20-G2	20.5	18.0
ZS3A-22-G2	22.5	20.0
ZS3A-24-G2	24.5	22.0
ZS3A-26-G2	26.5	24.0
ZS3A-28-G2	28.5	26.0
ZS3A-30-G2	30.5	28.0
ZS3A-32-G2	32.5	30.0
ZS3A-34-G2	34.5	32.0
ZS3A-36-G2	36.5	34.0
ZS3A-38-G2	38.5	36.0
ZS3A-40-G2	40.5	38.0
ZS3A-42-G2	42.5	40.0

Part Number	A	B
ZS3A-44-G2	44.5	42.0
ZS3A-46-G2	46.5	44.0
ZS3A-48-G2	48.5	46.0
ZS3A-50-G2	50.5	48.0
ZS3A-52-G2	52.5	50.0
ZS3A-54-G2	54.5	52.0
ZS3A-56-G2	56.5	54.0
ZS3A-58-G2	58.5	56.0
ZS3A-60-G2	60.5	58.0
ZS3A-62-G2	62.5	60.0
ZS3A-64-G2	64.5	62.0
ZS3A-66-G2	66.5	64.0
ZS3A-68-G2	68.5	66.0
ZS3A-70-G2	70.5	68.0
ZS3A-72-G2	72.5	70.0
ZS3A-74-G2	74.5	72.0
ZS3A-76-G2	76.5	74.0
ZS3A-78-G2	78.5	76.0
ZS3A-80-G2	80.5	78.0

SPECIFICATIONS

Contact Resistance:	20mΩ max. at 100mA DC
Insulation Resistance:	1,000MΩ min. at 500V
Withstanding Voltage:	500V AC
Current Rating:	1A
Operating Temp. Range:	-40°C to +105°C
Soldering Temp.:	230°C / 3 sec.

PART NUMBER

ZS4A - ** G2

- Series No.
- No. of Contact Pins: (6 to 80)
- Mating Face Plating: G2 = Gold Flash

MATERIALS AND FINISH

Insulator:	Nylon 6T, glass reinforced, UL 94V-0 rated
Terminals:	Phosphor Bronze
Contact Plating:	Au Flash

FEATURES

- Pin count from 6 to 80

OUTLINE CONNECTOR DIMENSIONS

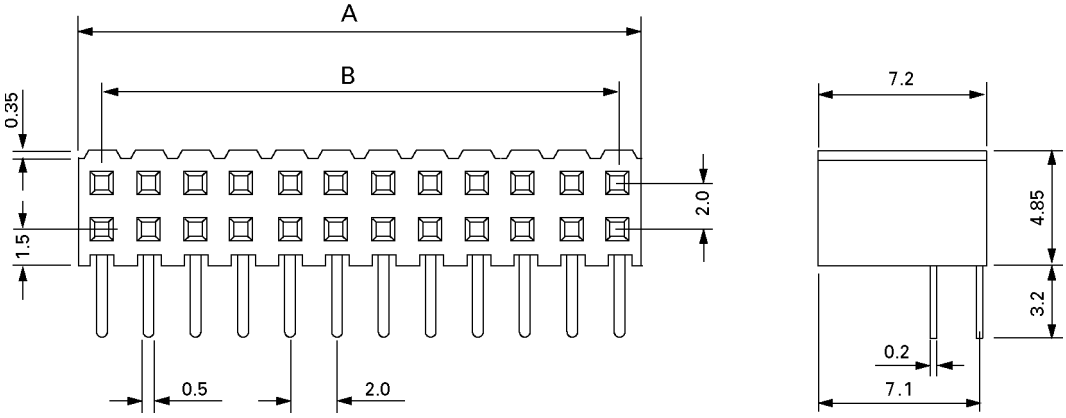

RECOMMENDED PCB LAYOUT

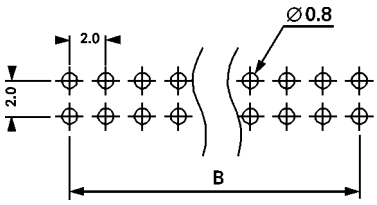

Top View

Part Number	A	B	Part Number	A	B
ZS4A-06-G2	6.50	4.0	ZS4A-44-G2	44.50	42.0
ZS4A-08-G2	8.50	6.0	ZS4A-46-G2	46.50	44.0
ZS4A-10-G2	10.50	8.0	ZS4A-48-G2	48.50	46.0
ZS4A-12-G2	12.50	10.0	ZS4A-50-G2	50.50	48.0
ZS4A-14-G2	14.50	12.0	ZS4A-52-G2	52.50	50.0
ZS4A-16-G2	16.50	14.0	ZS4A-54-G2	54.50	52.0
ZS4A-18-G2	18.50	16.0	ZS4A-56-G2	56.50	54.0
ZS4A-20-G2	20.50	18.0	ZS4A-58-G2	58.50	56.0
ZS4A-22-G2	22.50	20.0	ZS4A-60-G2	60.50	58.0
ZS4A-24-G2	24.50	22.0	ZS4A-62-G2	62.50	60.0
ZS4A-26-G2	26.50	24.0	ZS4A-64-G2	64.50	62.0
ZS4A-28-G2	28.50	26.0	ZS4A-66-G2	66.50	64.0
ZS4A-30-G2	30.50	28.0	ZS4A-68-G2	68.50	66.0
ZS4A-32-G2	32.50	30.0	ZS4A-70-G2	70.50	68.0
ZS4A-34-G2	34.50	32.0	ZS4A-72-G2	72.50	70.0
ZS4A-36-G2	36.50	34.0	ZS4A-74-G2	74.50	72.0
ZS4A-38-G2	38.50	36.0	ZS4A-76-G2	76.50	74.0
ZS4A-40-G2	40.50	38.0	ZS3A-78-G2	78.50	76.0
ZS4A-42-G2	42.50	40.0	ZS4A-80-G2	80.50	78.0

Trading Division

SPECIFICATIONS

Contact Resistance:	20mΩ max. at 100mA DC
Insulation Resistance:	1,000MΩ min. at 500V
Withstanding Voltage:	500V AC
Current Rating:	1A
Operating Temp. Range:	-40°C to +105°C
Soldering Temp.:	230°C min. / 60 sec., 260°C peak

MATERIALS AND FINISH

Insulator:	Nylon 6T, glass reinforced, UL 94V-0 rated
Terminals:	Phosphor bronze
Contact Plating:	Au Flash

FEATURES

- Pin count from 4 to 80

PART NUMBER

ZS5A - ** G2

- Series No.
- No. of Contact Pins: (4 to 80)
- Mating Face Plating: G2 = Gold Flash

OUTLINE CONNECTOR DIMENSIONS

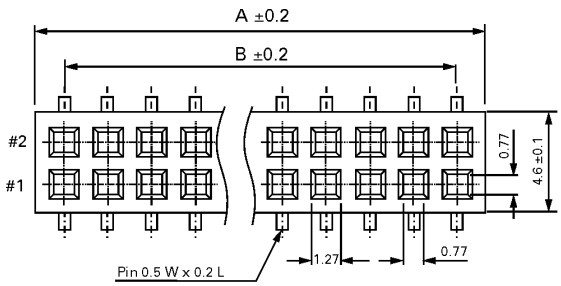

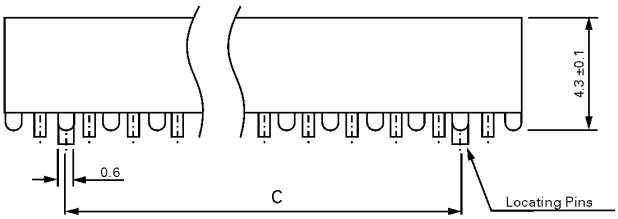

RECOMMENDED PCB LAYOUT

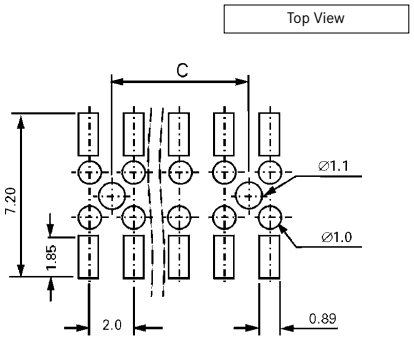

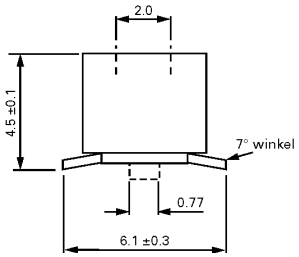

Part Number	A	B	C
ZS5A-04-G2	4.6	2.0	2.0
ZS5A-06-G2	6.6	4.0	2.0
ZS5A-08-G2	8.6	6.0	4.0
ZS5A-10-G2	10.6	8.0	6.0
ZS5A-12-G2	12.6	10.0	8.0
ZS5A-14-G2	14.6	12.0	10.0
ZS5A-16-G2	16.6	14.0	12.0
ZS5A-18-G2	18.6	16.0	14.0
ZS5A-20-G2	20.6	18.0	16.0
ZS5A-22-G2	22.6	20.0	18.0
ZS5A-24-G2	24.6	22.0	20.0
ZS5A-26-G2	26.6	24.0	22.0
ZS5A-28-G2	28.6	26.0	24.0
ZS5A-30-G2	30.6	28.0	26.0
ZS5A-32-G2	32.6	30.0	28.0
ZS5A-34-G2	34.6	32.0	30.0
ZS5A-36-G2	36.6	34.0	32.0
ZS5A-38-G2	38.6	36.0	34.0
ZS5A-40-G2	40.6	38.0	36.0
ZS5A-42-G2	42.6	40.0	38.0

Part Number	A	B	C
ZS5A-44-G2	44.6	42.0	40.0
ZS5A-46-G2	46.6	44.0	42.0
ZS5A-48-G2	48.6	46.0	44.0
ZS5A-50-G2	50.6	48.0	46.0
ZS5A-52-G2	52.6	50.0	48.0
ZS5A-54-G2	54.6	52.0	50.0
ZS5A-56-G2	56.6	54.0	52.0
ZS5A-58-G2	58.6	56.0	54.0
ZS5A-60-G2	60.6	58.0	56.0
ZS5A-62-G2	62.6	60.0	58.0
ZS5A-64-G2	64.6	62.0	60.0
ZS5A-66-G2	66.6	64.0	62.0
ZS5A-68-G2	68.6	66.0	64.0
ZS5A-70-G2	70.6	68.0	66.0
ZS5A-72-G2	72.6	70.0	68.0
ZS5A-74-G2	74.6	72.0	70.0
ZS5A-76-G2	76.6	74.0	72.0
ZS5A-78-G2	78.6	76.0	74.0
ZS5A-80-G2	80.6	78.0	76.0

SPECIFICATIONS

Contact Resistance:	20mΩ max. at 100mA DC
Insulation Resistance:	5,000MΩ min. at 500V
Withstanding Voltage:	500V AC
Current Rating:	1A
Operating Temp. Range:	-40°C to +105°C
Soldering Temp.:	230°C min. / 60 sec., 250°C peak

PART NUMBER

ZS6A - ** G2

- Series No.
- No. of Contact Pins: (6 to 60)
- Mating Face Plating: G2 = Gold Flash

MATERIALS AND FINISH

Insulator:	Nylon 6T, glass reinforced, UL 94V-0 rated
Terminals:	Phosphor bronze
Contact Plating:	Au Flash

FEATURES

- Pin count from 6 to 60

OUTLINE CONNECTOR DIMENSIONS

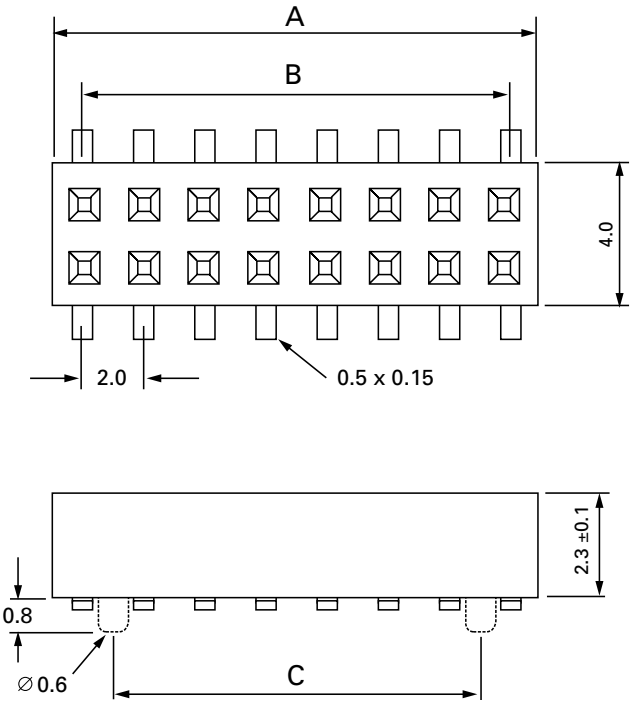

RECOMMENDED PCB LAYOUT

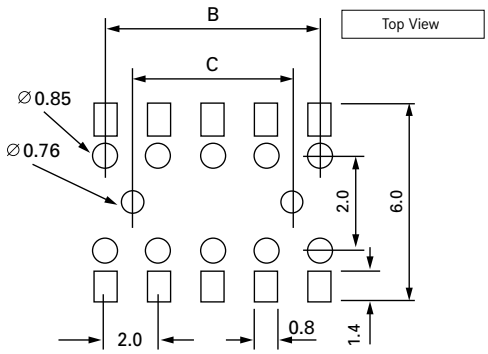

Part Number	A	B	C
ZS6A-06-G2	6.0	4.0	2.0
ZS6A-08-G2	8.0	6.0	4.0
ZS6A-10-G2	10.0	8.0	6.0
ZS6A-12-G2	12.0	10.0	8.0
ZS6A-14-G2	14.0	12.0	10.0
ZS6A-16-G2	16.0	14.0	12.0
ZS6A-18-G2	18.0	16.0	14.0
ZS6A-20-G2	20.0	18.0	16.0
ZS6A-22-G2	22.0	20.0	18.0
ZS6A-24-G2	24.0	22.0	20.0
ZS6A-26-G2	26.0	24.0	22.0
ZS6A-28-G2	28.0	26.0	24.0
ZS6A-30-G2	30.0	28.0	26.0
ZS6A-32-G2	32.0	30.0	28.0

Part Number	A	B	C
ZS6A-34-G2	34.0	32.0	30.0
ZS6A-36-G2	36.0	34.0	32.0
ZS6A-38-G2	38.0	36.0	34.0
ZS6A-40-G2	40.0	38.0	36.0
ZS6A-42-G2	42.0	40.0	38.0
ZS6A-44-G2	44.0	42.0	40.0
ZS6A-46-G2	46.0	44.0	42.0
ZS6A-48-G2	48.0	46.0	44.0
ZS6A-50-G2	50.0	48.0	46.0
ZS6A-52-G2	52.0	50.0	48.0
ZS6A-54-G2	54.0	52.0	50.0
ZS6A-56-G2	56.0	54.0	52.0
ZS6A-58-G2	58.0	56.0	54.0
ZS6A-60-G2	60.0	58.0	56.0

Trading Division

ZS5A TOP CONNECTOR – SOCKET

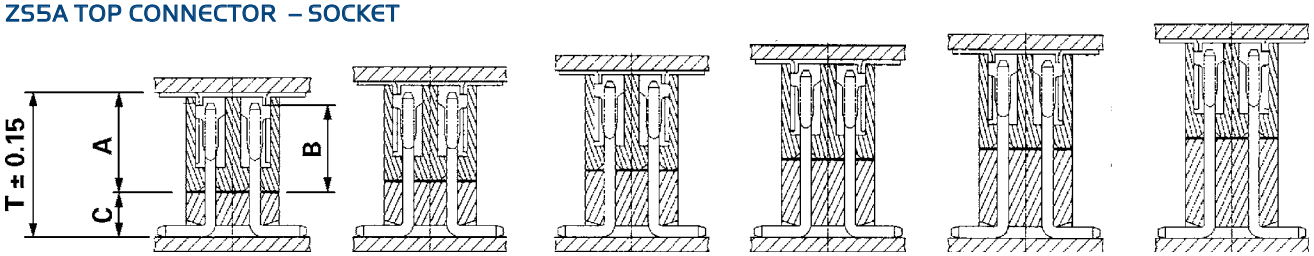

C = 2.0 mm T = 6.5 mm | C = 2.5 mm T = 7.0 mm | C = 3.0 mm T = 7.5 mm | C = 3.5 mm T = 8.0 mm | C = 4.0 mm T = 8.5 mm | C = 4.5 mm T = 9.0 mm

ZP4 BOTTOM CONNECTOR – PIN HEADER

ZS5A TOP CONNECTOR – SOCKET

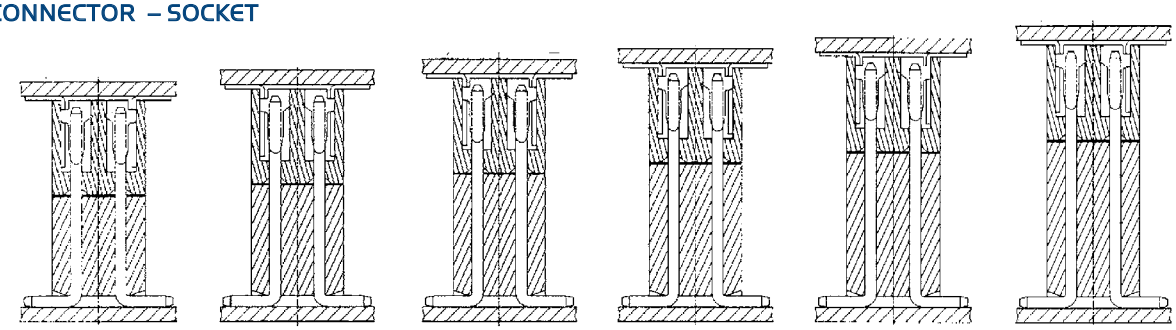

C = 5.0 mm T = 9.5 mm | C = 5.5 mm T = 10.0 mm | C = 6.0 mm T = 10.5 mm | C = 6.5 mm T = 11.0 mm | C = 7.0 mm T = 11.5 mm | C = 4.5 mm T = 12.0 mm

ZP4 BOTTOM CONNECTOR – PIN HEADER

ZS5A TOP CONNECTOR – SOCKET

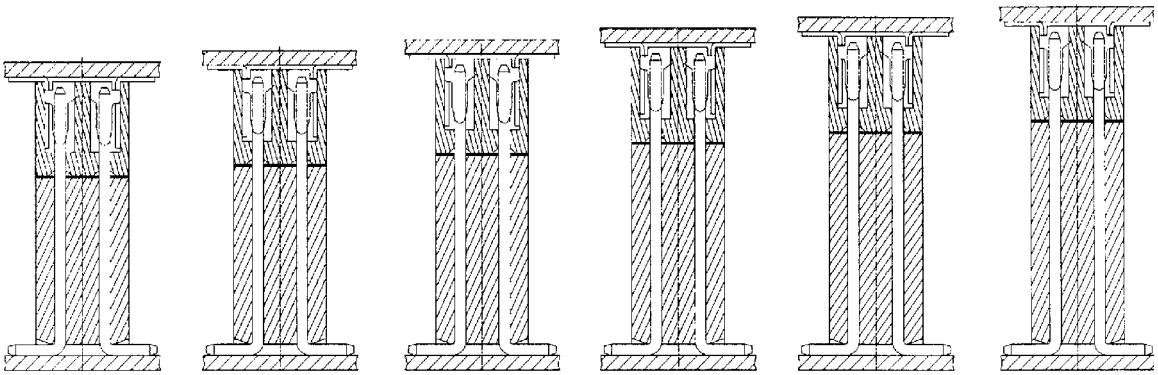

C = 8.0 mm T = 12.5 mm | C = 8.5 mm T = 13.0 mm | C = 9.0 mm T = 13.5 mm | C = 9.5 mm T = 14.0 mm | C = 10.0 mm T = 14.5 mm | C = 10.5 mm T = 15.0 mm

ZP4 BOTTOM CONNECTOR – PIN HEADER

ZS5A TOP CONNECTOR – SOCKET

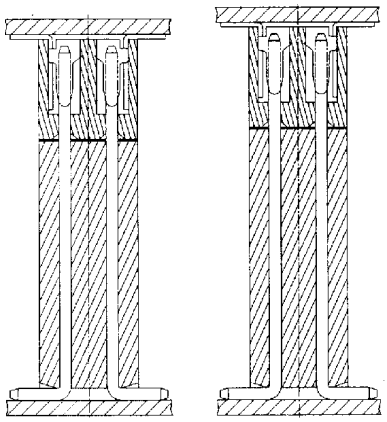

C = 11.0 mm T = 15.5 mm | C = 11.5 mm T = 16.0 mm

ZP4 BOTTOM CONNECTOR – PIN HEADER

Information:
Dimension **A** = 4.50 mm
Dimension **B** = 4.00 mm
These dimensions remain constant for the socket **ZS5A**

Dimension C = Height
These dimensions vary from 2.0 mm to 12.0 mm for the pin header **ZP4**

Total height = **T** ±0.15

SPECIFICATIONS

Insulation Resistance:	1,000MΩ max.
Withstanding Voltage:	500V AC for 1 minute
Current Rating:	1A
Operating Temp. Range:	-40°C to 105°C

MATERIALS AND FINISH

Insulator: Polyester, UL94V-0 rated
Contacts: Brass, Au or Tin plating

FEATURES

- Single row pin counts from 3 to 50 and dual row pin counts from 6 to 100

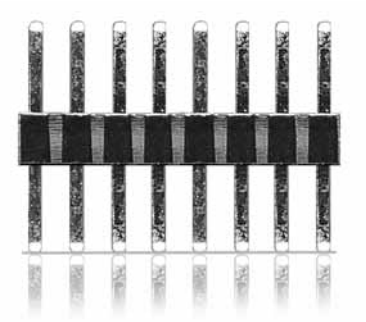

PART NUMBER

NP2 - 50 * - * - T* - ** - *

- Series
- Pin Count
- S = Single Row (3 to 50 Pins)
  D = Dual Row (6 to 100 Pins)
- Insulator Height A = 1.5mm
  B = 2.0mm
- T1 = 180° Type TH T9 = 90° Type TH
- Mating / Termination Plating Area:
  FF = Flash Gold / Flash Gold
  FL = Flash Gold / Tin
  LL = Tin / Tin
- T = Tube Packaging
  RC = Cap on Reel

IMPORTANT INFO
* Pin count = represents total amount of pins for single or dual rows

OUTLINE DIMENSIONS 180°

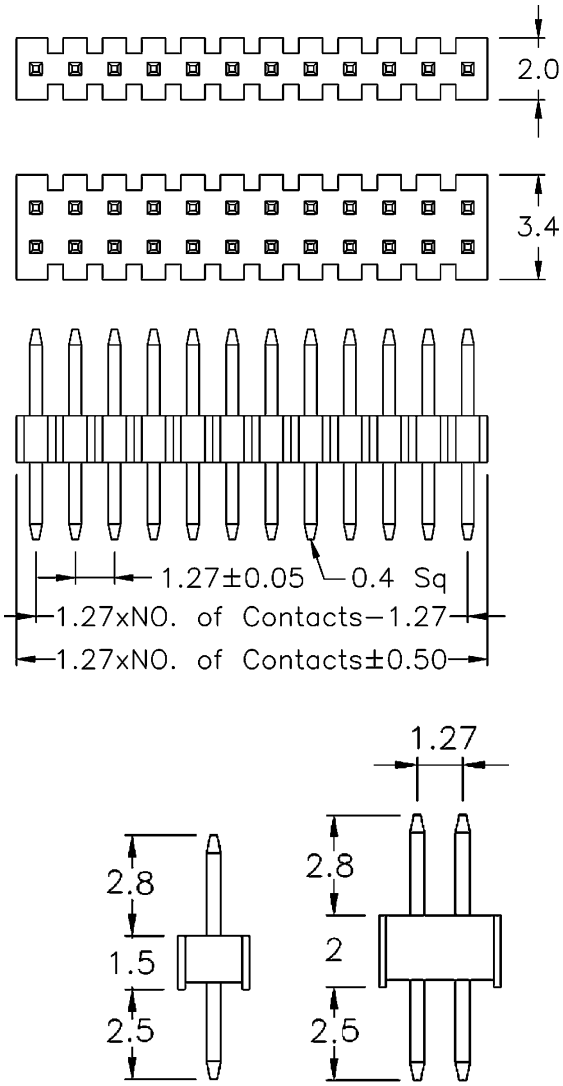

OUTLINE DIMENSIONS 90°

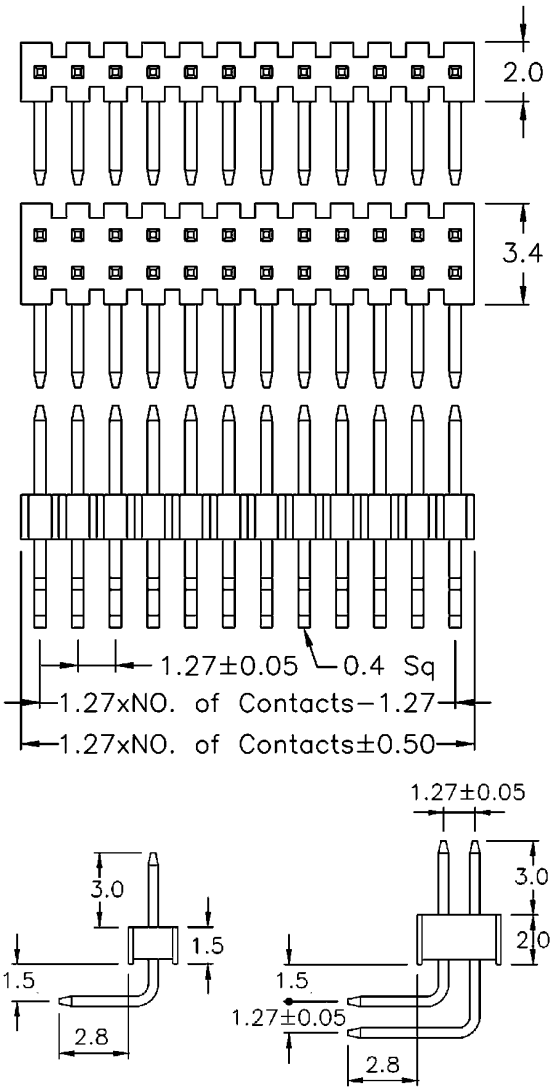

SPECIFICATIONS

Insulation Resistance:	1,000MΩ max.
Withstanding Voltage:	500V AC for 1 minute
Contact Resistance:	20mΩ max.
Current Rating:	2A
Operating Temp. Range:	-40°C to 105°C

MATERIALS AND FINISH

Insulator: Polyester UL94V-0 rated
Contacts: Brass, Au or Tin plating

FEATURES

- Single row pin counts from 3 to 50 and dual row pin conts from 6 to 100

PART NUMBER

NP4 - 50 * - * - S1 - ** - *

- Series
- Pin Count
- S = Single Row (3 to 50 Pins)
  D = Dual Row (6 to 100 Pins)
- Insulator Height A = 1.5mm
  B = 2.0mm
- S1 = 180° Type SMT
- Mating / Termination Plating Area:
  FF = Flash Gold / Flash Gold
  FL = Flash Gold / Tin
  LL = Tin / Tin
- T = Tube Packaging
  RC = Cap on Reel

* IMPORTANT INFO
Pin count represents total amount of pins for single or dual rows

OUTLINE DIMENSIONS 180°

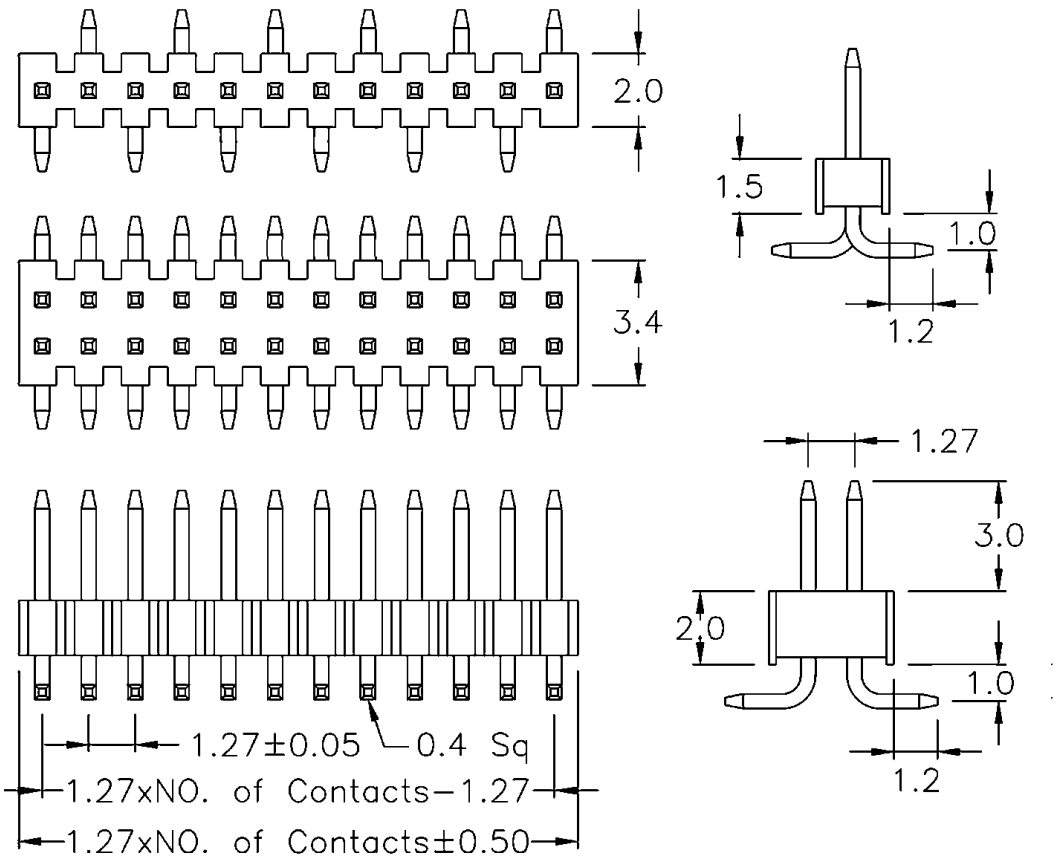

SPECIFICATIONS

Insulation Resistance:	1,000MΩ max.
Withstanding Voltage:	500V AC for 1 minute
Contact Resistance:	20mΩ max.
Current Rating:	1A
Operating Temp. Range:	-65°C to 125°C

MATERIALS AND FINISH

Insulator: PA46, UL94V-0 rated
Contacts: Brass

FEATURES

- Pin counts from 10 to 100

PART NUMBER

NP7 - 100 - T* - ** - T

- Series
- Pin Count: 10 to 100 Pins)
- T1 = 180° TH T9 = 90° TH
- Mating / Termination Plating Area:
  FF = Flash Gold / Flash Gold
  FL = Flash Gold / Tin
- T = Tube packaging

OUTLINE DIMENSIONS 180°

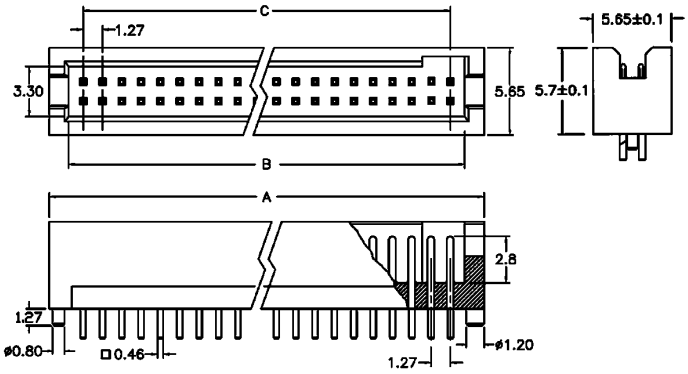

OUTLINE DIMENSIONS 90°

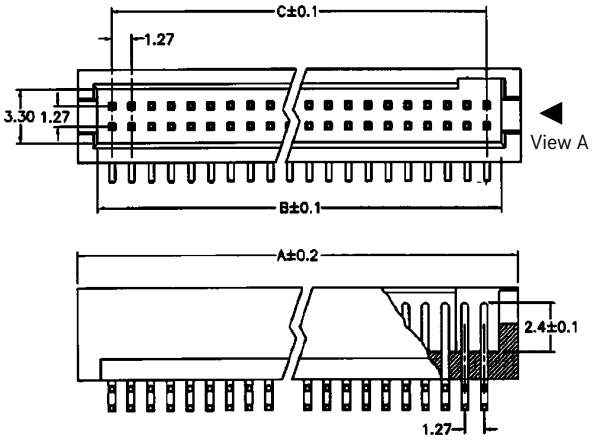

PCB LAYOUT

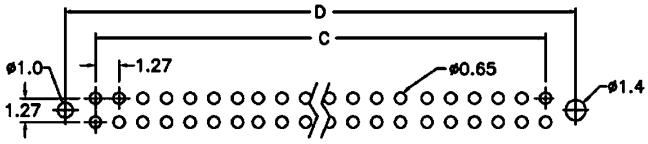

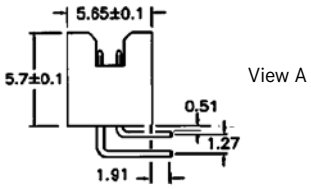

Part Number	Pin Count	A	B	C	D
NP7-10-T*-**-T	10	9.53	6.99	5.08	8.26
NP7-12-T*-**-T	12	10.80	8.26	6.35	9.53
NP7-14-T*-**-T	14	12.07	9.53	7.62	10.80
NP7-16-T*-**-T	16	13.34	10.80	8.89	12.07
NP7-18-T*-**-T	18	14.61	12.07	10.16	13.34
NP7-20-T*-**-T	20	15.88	13.34	11.43	14.61
NP7-22-T*-**-T	22	17.15	14.61	12.70	15.88
NP7-24-T*-**-T	24	18.42	15.88	13.97	17.15
NP7-26-T*-**-T	26	19.69	17.15	15.24	18.42
NP7-28-T*-**-T	28	20.96	18.42	16.51	19.69
NP7-30-T*-**-T	30	22.23	19.96	17.78	20.96
NP7-32-T*-**-T	32	23.50	20.96	19.05	22.23
NP7-34-T*-**-T	34	24.77	22.23	20.32	23.50
NP7-36-T*-**-T	36	26.04	23.50	21.59	24.77
NP7-38-T*-**-T	38	27.31	24.77	22.86	26.04
NP7-40-T*-**-T	40	28.58	26.04	24.13	27.31
NP7-42-T*-**-T	42	29.85	27.31	25.40	28.58
NP7-44-T*-**-T	44	31.12	28.58	26.67	29.85
NP7-46-T*-**-T	46	32.39	29.85	27.94	31.12
NP7-48-T*-**-T	48	33.66	31.12	29.21	32.39
NP7-50-T*-**-T	50	34.93	32.39	30.48	33.66
NP7-52-T*-**-T	52	36.20	33.66	31.75	34.93
NP7-54-T*-**-T	54	37.47	34.93	33.02	36.20

Part Number	Pin Count	A	B	C	D
NP7-56-T*-**-T	56	38.74	36.20	34.29	37.47
NP7-58-T*-**-T	58	40.01	37.47	35.56	38.74
NP7-60-T*-**-T	60	41.28	38.74	36.83	40.01
NP7-62-T*-**-T	62	42.55	40.01	38.10	41.28
NP7-64-T*-**-T	64	43.82	41.28	39.37	42.55
NP7-66-T*-**-T	66	45.09	42.55	40.64	43.82
NP7-68-T*-**-T	68	46.36	43.82	41.91	45.09
NP7-70-T*-**-T	70	47.63	45.09	43.18	46.36
NP7-72-T*-**-T	72	48.90	46.36	44.45	47.63
NP7-74-T*-**-T	74	50.17	47.63	45.72	48.90
NP7-76-T*-**-T	76	51.44	48.90	46.99	50.17
NP7-78-T*-**-T	78	52.71	50.17	48.26	51.44
NP7-80-T*-**-T	80	53.98	51.44	49.53	52.71
NP7-82-T*-**-T	82	55.25	52.71	50.80	53.98
NP7-84-T*-**-T	84	56.52	53.98	52.07	55.25
NP7-86-T*-**-T	86	57.79	55.25	53.34	56.52
NP7-88-T*-**-T	88	59.06	56.52	54.61	57.79
NP7-90-T*-**-T	90	60.33	57.79	55.88	59.06
NP7-92-T*-**-T	92	61.60	59.06	57.15	60.33
NP7-94-T*-**-T	94	62.87	60.33	58.42	61.60
NP7-96-T*-**-T	96	64.14	61.60	59.69	62.87
NP7-98-T*-**-T	98	65.41	62.87	60.96	64.14
NP7-100-T*-**-T	100	66.68	64.14	62.23	65.41

Trading Division

SPECIFICATIONS

Insulation Resistance:	1,000MΩ max.
Withstanding Voltage:	500V AC for 1 minute
Contact Resistance:	20mΩ max.
Current Rating:	1A
Operating Temp. Range:	-65°C to 125°C

MATERIALS AND FINISH

Insulator: Nylon, UL94V-0 rated
Contacts: Brass

FEATURES

- Pin counts from 10 to 100

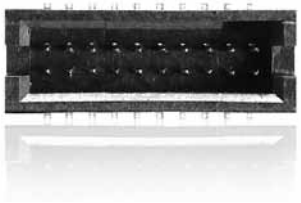

PART NUMBER

NP7 - 100 - S1 - ** - *

- Series
- Pin Count: 10 to 100 Pins)
- S1 = 180° SMT
- Mating / Termination Plating Area:
  FF = Flash Gold / Flash Gold
  FL = Flash Gold / Tin
- T = Tube packaging

OUTLINE DIMENSIONS 180°

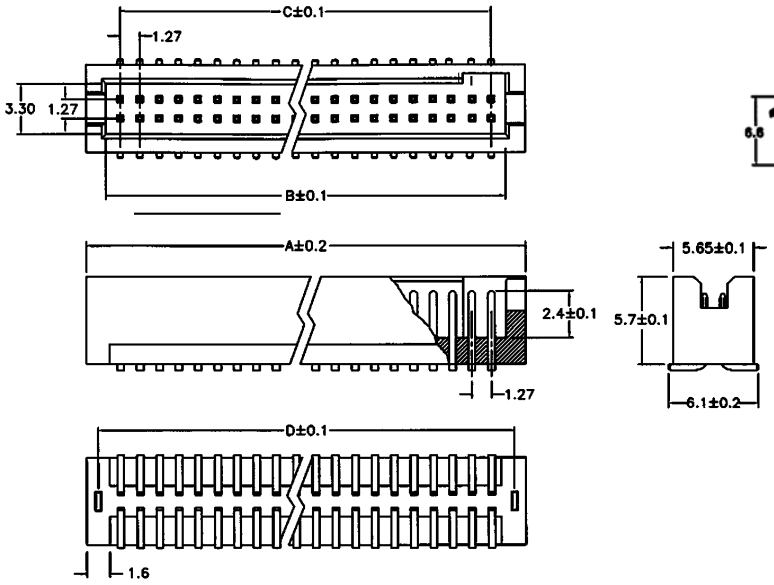

PCB LAYOUT

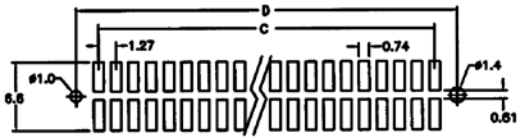

Part Number	Pin Count	A	B	C	D
NP7-10-S1-**-*	10	9.53	6.99	5.08	8.26
NP7-12-S1-**-*	12	10.80	8.26	6.35	9.53
NP7-14-S1-**-*	14	12.07	9.53	7.62	10.80
NP7-16-S1-**-*	16	13.34	10.80	8.89	12.07
NP7-18-S1-**-*	18	14.61	12.07	10.16	13.34
NP7-20-S1-**-*	20	15.88	13.34	11.43	14.61
NP7-22-S1-**-*	22	17.15	14.61	12.70	15.88
NP7-24-S1-**-*	24	18.42	15.88	13.97	17.15
NP7-26-S1-**-*	26	19.69	17.15	15.24	18.24
NP7-28-S1-**-*	28	20.96	18.42	16.51	19.69
NP7-30-S1-**-*	30	22.23	19.69	17.78	20.96
NP7-32-S1-**-*	32	23.50	20.96	19.05	22.23
NP7-34-S1-**-*	34	24.77	22.23	20.32	23.50
NP7-36-S1-**-*	36	26.04	23.50	21.59	24.77
NP7-38-S1-**-*	38	27.31	24.77	22.86	26.04
NP7-40-S1-**-*	40	28.58	26.04	24.13	27.31
NP7-42-S1-**-*	42	29.85	27.31	25.40	28.58
NP7-44-S1-**-*	44	31.12	28.58	26.67	29.85
NP7-46-S1-**-*	46	32.39	29.85	27.94	31.12
NP7-48-S1-**-*	48	33.66	31.12	29.21	32.39
NP7-50-S1-**-*	50	34.93	32.39	30.48	33.66
NP7-52-S1-**-*	52	36.20	33.66	31.75	34.93
NP7-54-S1-**-*	54	37.47	34.93	33.02	36.20

Part Number	Pin Count	A	B	C	D
NP7-56-S1-**-*	56	38.74	36.20	34.29	37.47
NP7-58-S1-**-*	58	40.01	37.47	35.56	38.74
NP7-60-S1-**-*	60	41.28	38.74	36.83	40.01
NP7-62-S1-**-*	62	42.55	40.01	38.10	41.28
NP7-64-S1-**-*	64	43.82	41.28	39.37	42.55
NP7-66-S1-**-*	66	45.09	42.55	40.64	43.82
NP7-68-S1-**-*	68	46.36	43.82	41.91	45.09
NP7-70-S1-**-*	70	47.63	45.09	43.18	46.36
NP7-72-S1-**-*	72	48.90	46.36	44.45	47.63
NP7-74-S1-**-*	74	50.17	47.63	45.72	48.90
NP7-76-S1-**-*	76	51.44	48.90	46.99	50.17
NP7-78-S1-**-*	78	52.71	50.17	48.26	51.44
NP7-80-S1-**-*	80	53.98	51.44	49.53	52.71
NP7-82-S1-**-*	82	55.25	52.18	50.80	53.98
NP7-84-S1-**-*	84	56.52	53.98	52.07	55.25
NP7-86-S1-**-*	86	57.79	55.25	53.34	56.52
NP7-88-S1-**-*	88	59.06	56.52	54.61	57.79
NP7-90-S1-**-*	90	60.33	57.79	55.88	59.06
NP7-92-S1-**-*	92	61.60	59.06	57.15	60.33
NP7-94-S1-**-*	94	62.87	60.33	58.42	61.60
NP7-96-S1-**-*	96	64.14	61.60	59.69	62.87
NP7-98-S1-**-*	98	65.41	62.87	60.96	64.14
NP7-100-S1-**-*	100	66.68	64.14	62.23	65.41

SPECIFICATIONS

Insulation Resistance:	5,000MΩ min. at 500V
Withstanding Voltage:	500V AC for 1 minute
Contact Resistance:	20mΩ max.
Current Rating:	1A
Operating Temp. Range:	-65°C to 120°C

MATERIALS AND FINISH

Insulator: LCP, UL94V-0 rated
Contacts: Phosphor Bronze, Plating Au

FEATURES

- Pin counts from 6 to 100

PART NUMBER

NS3 - 52 - T1 - FF - *

- Series
- Pin Count: (6 to 100 Pins)
- T1 = 180° Type TH
- Mating / Termination Plating Area:
  FF = Flash Gold / Flash Gold
- T = Tube Packaging
  RC = Cap on Reel

OUTLINE DIMENSIONS 180°

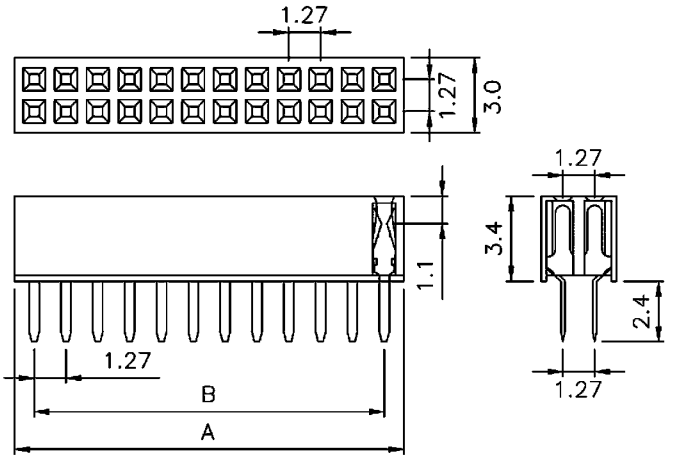

PCB LAYOUT

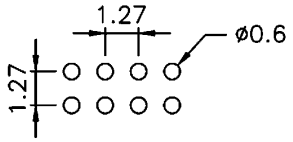

Part Number	Pin Count	A	B
NS3-6-T1-FF-*	6	4.27	2.54
NS3-8-T1-FF-*	8	5.54	3.81
NS3-10-T1-FF-*	10	6.81	5.08
NS3-12-T1-FF-*	12	8.08	6.35
NS3-14-T1-FF-*	14	9.35	7.62
NS3-16-T1-FF-*	16	10.62	8.89
NS3-18-T1-FF-*	18	11.89	10.16
NS3-20-T1-FF-*	20	13.16	11.43
NS3-22-T1-FF-*	22	14.43	12.70
NS3-24-T1-FF-*	24	15.70	13.97
NS3-26-T1-FF-*	26	16.97	15.24
NS3-28-T1-FF-*	28	18.24	16.51
NS3-30-T1-FF-*	30	19.51	17.78
NS3-32-T1-FF-*	32	20.78	19.05
NS3-34-T1-FF-*	34	22.05	20.32
NS3-36-T1-FF-*	36	23.32	21.59
NS3-38-T1-FF-*	38	24.59	22.86
NS3-40-T1-FF-*	40	25.86	24.13
NS3-42-T1-FF-*	42	27.13	25.40
NS3-44-T1-FF-*	44	28.40	26.67
NS3-46-T1-FF-*	46	29.67	27.94
NS3-48-T1-FF-*	48	30.94	29.21
NS3-50-T1-FF-*	50	32.21	30.48
NS3-52-T1-FF-*	52	33.48	31.75

Part Number	Pin Count	A	B
NS3-54-T1-FF-*	54	34.75	33.02
NS3-56-T1-FF-*	56	36.02	34.29
NS3-58-T1-FF-*	58	37.29	35.56
NS3-60-T1-FF-*	60	38.56	36.83
NS3-62-T1-FF-*	62	39.83	38.10
NS3-64-T1-FF-*	64	41.10	39.37
NS3-66-T1-FF-*	66	42.37	40.64
NS3-68-T1-FF-*	68	43.64	41.91
NS3-70-T1-FF-*	70	44.91	43.18
NS3-72-T1-FF-*	72	46.18	44.45
NS3-74-T1-FF-*	74	47.45	45.72
NS3-76-T1-FF-*	76	48.72	46.99
NS3-78-T1-FF-*	78	49.99	48.26
NS3-80-T1-FF-*	80	51.26	49.53
NS3-82-T1-FF-*	82	52.53	50.80
NS3-84-T1-FF-*	84	53.80	52.07
NS3-86-T1-FF-*	86	55.07	53.34
NS3-88-T1-FF-*	88	56.34	54.61
NS3-90-T1-FF-*	90	57.61	55.88
NS3-92-T1-FF-*	92	58.88	57.15
NS3-94-T1-FF-*	94	60.15	58.42
NS3-96-T1-FF-*	96	61.42	59.69
NS3-98-T1-FF-*	98	62.69	60.96
NS3-100-T1-FF-*	100	63.96	62.23

SPECIFICATIONS

Insulation Resistance:	5,000MΩ min. at 500V
Withstanding Voltage:	500V AC for 1 minute
Contact Resistance:	20mΩ max.
Current Rating:	1A
Operating Temp. Range:	-65°C to 120°C

MATERIALS AND FINISH

Insulator: LCP, UL94V-0 rated
Contacts: Phosphor Bronze, Plating Au

FEATURES

- Pin counts from 6 to 100

PART NUMBER

NS5 - 52 - S1 - FF - *

- Series
- Pin Count: (6 to 100 Pins)
- S1 = 180° Type SMT
- Mating / Termination Plating Area: FF = Flash Gold / Flash Gold
- T = Tube Packaging; RC = Cap on Reel

OUTLINE DIMENSIONS 180°

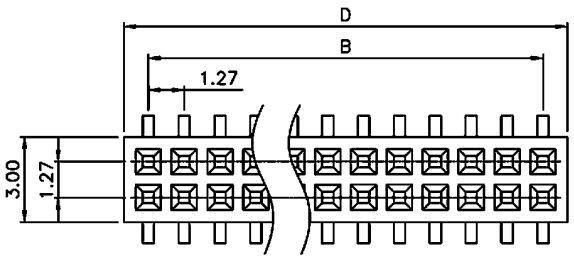

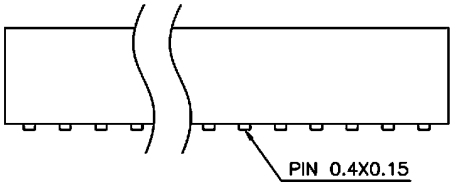

PCB LAYOUT

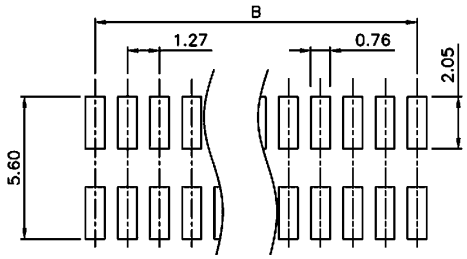

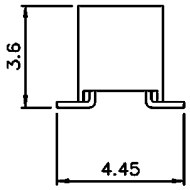

Part Number	Pin Count	A	B	C	D
NS5-6-S1-FF-*	6	4.27	2.54	5.58	4.21
NS5-8-S1-FF-*	8	5.54	3.81	6.85	5.48
NS5-10-S1-FF-*	10	6.81	5.08	8.12	6.75
NS5-12-S1-FF-*	12	8.08	6.35	9.39	8.02
NS5-14-S1-FF-*	14	9.35	7.62	10.66	9.29
NS5-16-S1-FF-*	16	10.62	8.89	11.93	10.56
NS5-18-S1-FF-*	18	11.89	10.16	13.20	11.83
NS5-20-S1-FF-*	20	13.16	11.43	14.47	13.10
NS5-22-S1-FF-*	22	14.43	12.70	15.74	14.37
NS5-24-S1-FF-*	24	15.70	13.97	17.01	15.64
NS5-26-S1-FF-*	26	16.97	15.24	18.28	16.91
NS5-28-S1-FF-*	28	18.24	16.51	19.55	18.18
NS5-30-S1-FF-*	30	19.51	17.78	20.82	19.45
NS5-32-S1-FF-*	32	20.78	19.05	22.09	20.72
NS5-34-S1-FF-*	34	22.05	20.32	23.36	21.99
NS5-36-S1-FF-*	36	23.32	21.59	24.63	23.26
NS5-38-S1-FF-*	38	24.59	22.86	25.90	24.53
NS5-40-S1-FF-*	40	25.86	24.13	27.17	25.80
NS5-42-S1-FF-*	42	27.13	25.40	28.44	27.07
NS5-44-S1-FF-*	44	28.40	26.67	29.71	28.34
NS5-46-S1-FF-*	46	29.67	27.94	30.98	29.61
NS5-48-S1-FF-*	48	30.94	29.21	32.25	30.88
NS5-50-S1-FF-*	50	32.21	30.48	33.52	32.15
NS5-52-S1-FF-*	52	33.48	31.75	34.79	33.42

Part Number	Pin Count	A	B	C	D
NS5-54-S1-FF-*	54	34.75	33.02	36.06	34.69
NS5-56-S1-FF-*	56	36.02	34.29	37.33	35.96
NS5-58-S1-FF-*	58	37.29	35.56	38.60	37.23
NS5-60-S1-FF-*	60	38.56	36.83	39.87	38.50
NS5-62-S1-FF-*	62	39.83	38.10	41.14	39.77
NS5-64-S1-FF-*	64	41.10	39.37	42.41	41.04
NS5-66-S1-FF-*	66	42.37	40.64	43.68	42.31
NS5-68-S1-FF-*	68	43.64	41.91	44.95	43.58
NS5-70-S1-FF-*	70	44.91	43.18	46.22	44.85
NS5-72-S1-FF-*	72	46.18	44.45	47.49	46.12
NS5-74-S1-FF-*	74	47.45	45.72	48.76	47.39
NS5-76-S1-FF-*	76	48.72	46.99	50.03	48.66
NS5-78-S1-FF-*	78	49.99	48.26	51.30	49.93
NS5-80-S1-FF-*	80	51.26	49.53	52.57	51.20
NS5-82-S1-FF-*	82	52.53	50.80	53.84	52.47
NS5-84-S1-FF-*	84	53.80	52.07	55.11	53.74
NS5-86-S1-FF-*	86	55.07	53.34	56.38	55.01
NS5-88-S1-FF-*	88	56.34	54.61	57.65	56.28
NS5-90-S1-FF-*	90	57.61	55.88	58.92	57.55
NS5-92-S1-FF-*	92	58.88	57.15	60.19	58.82
NS5-94-S1-FF-*	94	60.15	58.42	61.46	60.09
NS5-96-S1-FF-*	96	61.42	59.69	62.73	61.36
NS5-98-S1-FF-*	98	62.69	60.96	64.00	62.63
NS5-100-S1-FF-*	100	63.96	62.23	65.27	63.90

SPECIFICATIONS

Insulation Resistance:	1,000MΩ min.
Withstanding Voltage:	500V ACrms for 1 minute
Contact Resistance:	20mΩ max.
Current Rating:	1.0A AC/DC
Voltage Rating:	30V AC/DC
Operating Temp. Range:	-40°C to +105°C

MATERIALS AND FINISH

Insulator:	High Temperature Plastic UL94V-0
Contacts:	Phosphor Bronze
Plating:	Tin over Nickel (matt finish)

FEATURES

- 1.27mm staggered centre line
- Additional positioning spring absorbs relative movements
- Air tight connection

PART NUMBER

MBS - 16 - T 1 - LL - *

- Series (female)
- Pin Count
- Termination Type: T = TH
- 1 = 180° Type
- Plating: Mating / Termination Area
  LL = Tin / Tin
- 1 = with Locking
  0 = without Locking

OUTLINE DIMENSIONS WITH LOCKING

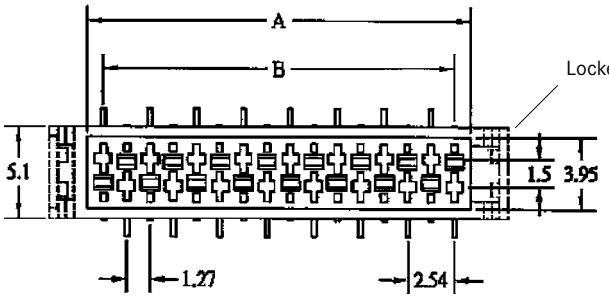

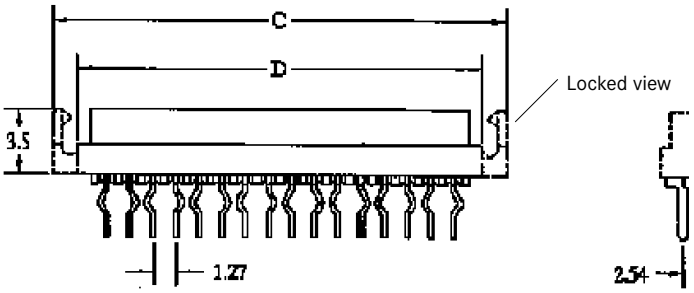

PCB LAYOUT

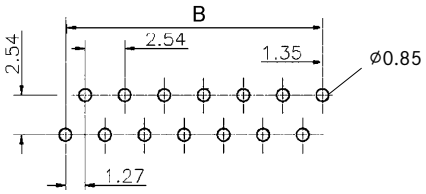

Standard Types

Part Number	Pin Count	A	B	C	D
MBS-6-T1-LL-*	6	8.13	6.35	12.20	9.52
MBS-8-T1-LL-*	8	10.67	8.89	14.74	12.06
MBS-10-T1-LL-*	10	13.21	11.43	17.28	14.60
MBS-12-T1-LL-*	12	15.75	13.97	19.82	17.14
MBS-14-T1-LL-*	14	18.29	16.51	22.36	19.68
MBS-16-T1-LL-*	16	20.83	19.05	24.90	22.22

The following pin counts are available on request, please contact Yamaichi

Part Number	Pin Count	A	B	C	D
MBS-4-T1-LL-*	4	5.59	3.81	9.66	6.98
MBS-18-T1-LL-*	18	23.37	21.59	27.44	24.76
MBS-20-T1-LL-*	20	25.91	24.13	29.98	27.30
MBS-22-T1-LL-*	22	28.45	26.67	32.52	29.84
MBS-24-T1-LL-*	24	30.99	29.21	35.06	32.38
MBS-26-T1-LL-*	26	33.53	31.75	37.60	34.92

SPECIFICATIONS

Insulation Resistance:	3,000MΩ min.
Withstanding Voltage:	500V ACrms for 1 minute
Contact Resistance:	30mΩ max.
Current Rating:	1.0A Voltage Rating:
Operating Temp. Range:	-40°C to +105°C

MATERIALS AND FINISH

Insulator: Nylon 6T UL94V-0
Contacts: Phosphor Bronze

FEATURES

- 1.27mm staggered centre line
- Additional positioning spring absorbs relative movements
- Air tight connection

PART NUMBER

MBS - 16 - S 1 - LL - *

- Series (female)
- Pin Count
- Termination Type: S = SMT
- 1 = 180° Type
- Plating: Mating / Termination Area LL = Tin / Tin
- 1 = with Locking 0 = without Locking

OUTLINE DIMENSIONS WITH AND WITHOUT LOCKING

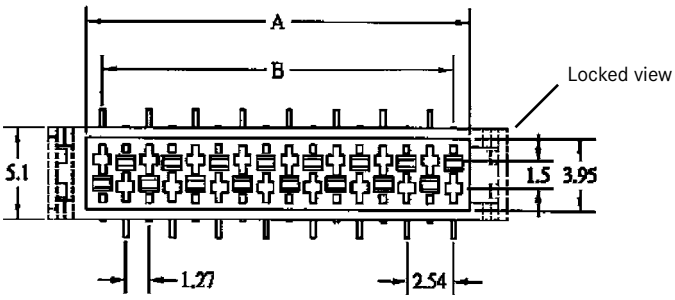

PCB LAYOUT

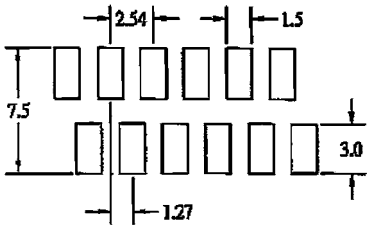

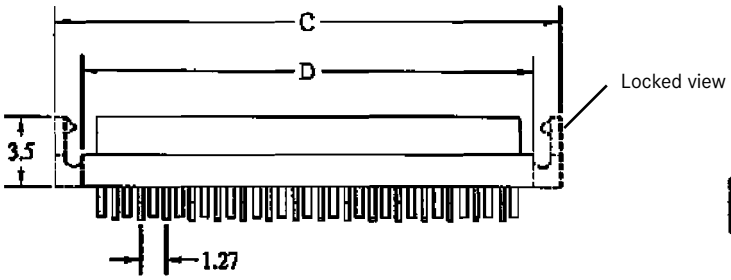

Standard Types

Part Number	Pin Count	A	B	C	D
MBS-6-S1-LL-*	6	8.13	6.35	12.22	9.52
MBS-8-S1-LL-*	8	10.67	8.89	14.76	12.06
MBS-10-S1-LL-*	10	13.21	11.43	17.30	14.60
MBS-12-S1-LL-*	12	15.75	13.97	19.84	17.14
MBS-14-S1-LL-*	14	18.29	16.51	22.38	19.68
MBS-16-S1-LL-*	16	20.83	19.05	24.92	22.22

The following pin counts are available on request, please contact Yamaichi

Part Number	Pin Count	A	B	C	D
MBS-4-S1-LL-*	4	5.59	3.81	9.68	6.98
MBS-18-S1-LL-*	18	23.37	21.59	27.46	24.76
MBS-20-S1-LL-*	20	25.91	24.13	30.00	27.30
MBS-22-S1-LL-*	22	28.45	26.67	32.54	29.84
MBS-24-S1-LL-*	24	30.99	29.21	35.08	32.38
MBS-26-S1-LL-*	26	33.53	31.75	37.62	34.92

SPECIFICATIONS

Insulation Resistance:	3,000MΩ min.
Withstanding Voltage:	500V ACrms for 1 minute
Contact Resistance:	30mΩ max.
Current Rating:	1.0A AC/DC
Voltage Rating:	30V AC/DC
Operating Temp. Range:	-40°C to +105°C

MATERIALS AND FINISH

Insulator: High Temperature Plastic UL94V-0
Contacts: Phosphor Bronze

FEATURES

- 1.27mm staggered centre line
- Additional positioning spring absorbs relative movements
- Air tight connection

PART NUMBER

MBP - 16 - T 1 - LL - 0

- Series (male)
- Pin Count
- Termination Type: T = TH
- 1 = 180° Type
- Plating: Mating / Termination Area LL = Tin / Tin
- 0 = without Locking

OUTLINE DIMENSIONS 180°

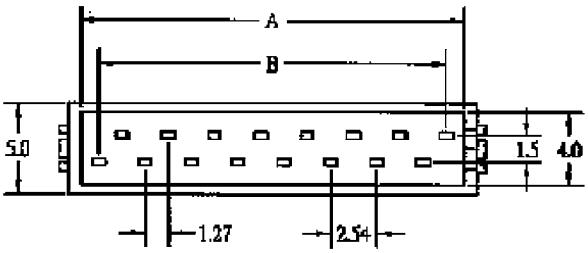

PCB LAYOUT

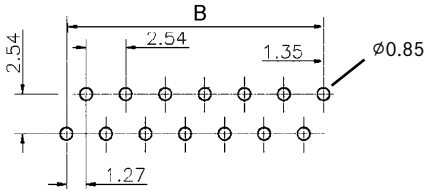

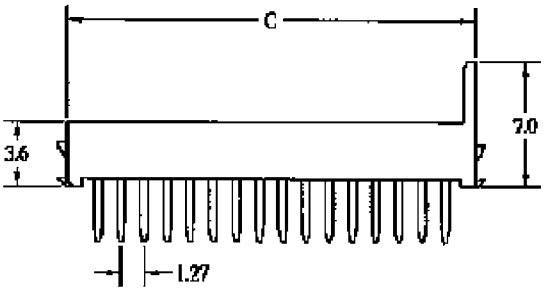

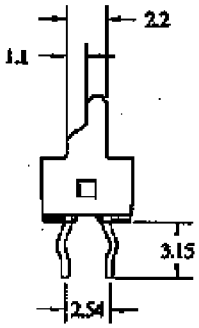

Standard Types

Part Number	Pin Count	A	B	C
MBP-6-T1-LL-0	6	8.38	6.35	9.70
MBP-8-T1-LL-0	8	10.92	8.89	12.24
MBP-10-T1-LL-0	10	13.46	11.43	14.78
MBP-12-T1-LL-0	12	16.00	13.97	17.32
MBP-14-T1-LL-0	14	18.54	16.51	19.86
MBP-16-T1-LL-0	16	21.08	19.05	22.40

The following pin counts are available on request, please contact Yamaichi

Part Number	Pin Count	A	B	C
MBP-4-T1-LL-0	4	5.84	3.81	7.16
MBP-18-T1-LL-0	18	23.62	21.59	24.94
MBP-20-T1-LL-0	20	26.16	24.13	27.48
MBP-22-T1-LL-0	22	28.70	26.67	30.02
MBP-24-T1-LL-0	24	31.24	29.21	32.56
MBP-26-T1-LL-0	26	33.78	31.75	35.10

SPECIFICATIONS

Insulation Resistance:	3,000MΩ min.
Withstanding Voltage:	500V ACrms for 1 minute
Contact Resistance:	30mΩ max.
Current Rating:	1.0A AC/DC
Voltage Rating:	30V AC/DC
Operating Temp. Range:	-40°C to +105°C

MATERIALS AND FINISH

Insulator: High Temperature Plastic UL94V-0
Contacts: Phosphor Bronze

FEATURES

- 1.27mm staggered centre line
- Additional positioning spring absorbs relative movements
- Air tight connection

PART NUMBER

MBS - 16 - T 9 - LL - *

- Series (female)
- Pin Count
- Termination Type: T = TH
- 9 = 90° Type
- Plating: Mating / Termination Area LL = Tin / Tin
- 0 = without Locking 1 = with Locking

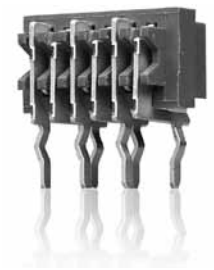

OUTLINE DIMENSIONS (90°)

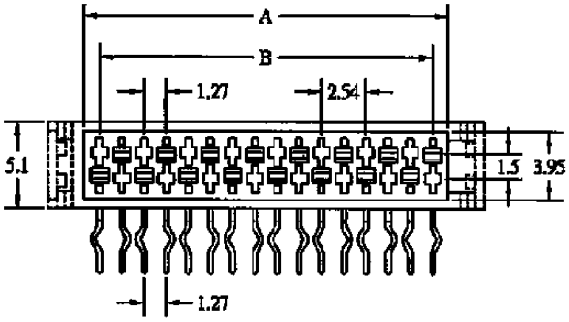

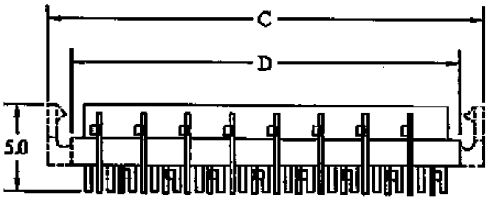

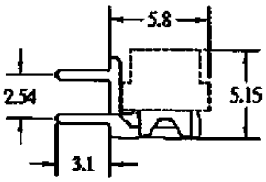

PCB LAYOUT

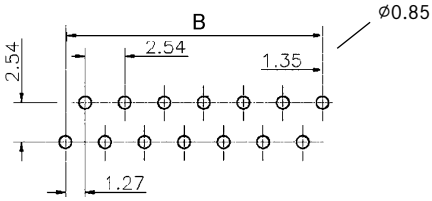

Standard Types

Part Number	Pin Count	A	B	C	D
MBS-6-T9-LL-*	6	8.13	6.35	12.22	9.52
MBS-8-T9-LL-*	8	10.67	8.89	14.76	12.06
MBS-10-T9-LL-*	10	13.21	11.43	17.30	14.60
MBS-12-T9-LL-*	12	15.75	13.97	19.84	17.14
MBS-14-T9-LL-*	14	18.29	16.51	22.38	19.68
MBS-16-T9-LL-*	16	20.83	19.05	24.92	22.22

The following pin counts are available on request, please contact Yamaichi

Part Number	Pin Count	A	B	C	D
MBS-4-T9-LL-*	4	5.59	3.81	9.68	6.98
MBS-18-T9-LL-*	18	23.37	21.59	27.46	24.76
MBS-20-T9-LL-*	20	25.91	24.13	30.00	27.30
MBS-22-T9-LL-*	22	28.45	26.67	32.54	29.84
MBS-24-T9-LL-*	24	30.99	29.21	35.08	32.38
MBS-26-T9-LL-*	26	33.53	31.75	37.62	34.92

SPECIFICATIONS

Insulation Resistance:	3,000MΩ min.
Withstanding Voltage:	500V ACrms for 1 minute
Contact Resistance:	30mΩ max.
Current Rating:	1.0A AC/DC
Voltage Rating:	30V AC/DC
Operating Temp. Range:	-40°C to +105°C

MATERIALS AND FINISH

Insulator: High Temperature Plastic UL94V-0
Contacts: Phosphor Bronze

FEATURES

- 1.27mm staggered centre line
- Additional positioning spring absorbs relative movements
- Air tight connection

PART NUMBER

MCP - 16 - TI 9 - LL

- Series (male)
- No. of Pins
- Termination Type: T = TH I = IDC
- 9 = 90° Type
- Plating: Mating / Termination Area LL = Tin / Tin

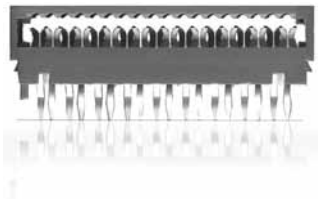

APPLICABLE CABLES

AWG 27 stranded wire, 1.27mm pitch
(e.g. DK**-*, see Section Cables)

OUTLINE DIMENSIONS (TH 90°)

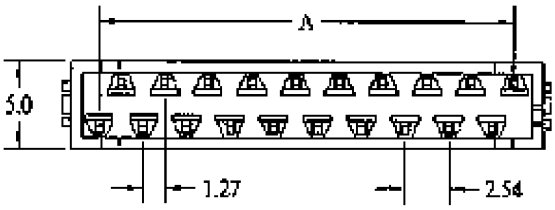

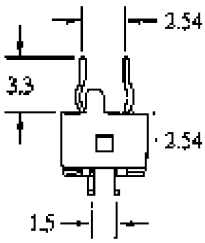

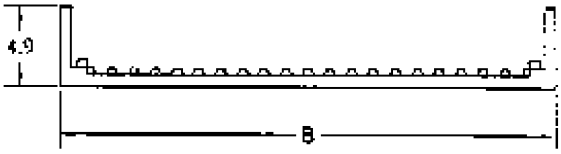

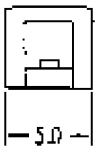

PCB LAYOUT

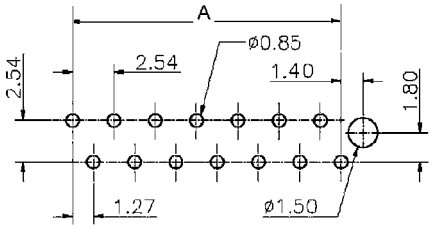

Standard Types

Part Number	Pin Count	A	B
MCP-6-T1-9-LL	6	6.35	11.00
MCP-8-T1-9-LL	8	8.89	13.54
MCP-10-T1-9-LL	10	11.43	16.08
MCP-12-T1-9-LL	12	13.97	18.62
MCP-14-T1-9-LL	14	16.51	21.16
MCP-16-T1-9-LL	16	19.05	23.70

The following pin counts are available on request, please contact Yamaichi

Part Number	Pin Count	A	B
MCP-4-T1-9-LL	4	3.81	8.46
MCP-18-T1-9-LL	18	21.59	26.24
MCP-20-T1-9-LL	20	24.13	28.78
MCP-22-T1-9-LL	22	26.67	31.32
MCP-24-T1-9-LL	24	29.21	33.86
MCP-26-T1-9-LL	26	31.75	36.40

SPECIFICATIONS

Insulation Resistance:	3,000MΩ min.
Withstanding Voltage:	500V ACrms for 1 minute
Contact Resistance:	30mΩ max.
Current Rating:	1.0A AC/DC
Voltage Rating:	30V AC/DC
Operating Temp. Range:	-40°C to +105°C

MATERIALS AND FINISH

Insulator: High Temperature Plastic UL94V-0
Contacts: Phosphor Bronze

FEATURES

- 1.27mm staggered centre line
- Additional positioning spring absorbs relative movements
- Air tight connection

PART NUMBER

MCP - 16 - I 9 - LL

- Series (male)
- No. of Pins
- Termination Type: I = IDC
- 9 = 90° Type
- Plating: Mating / Termination Area LL = Tin / Tin

APPLICABLE CABLES

AWG 27 stranded wire, 1.27mm pitch
(e.g. DK**-*, see Section Cables)

OUTLINE DIMENSIONS (90°)

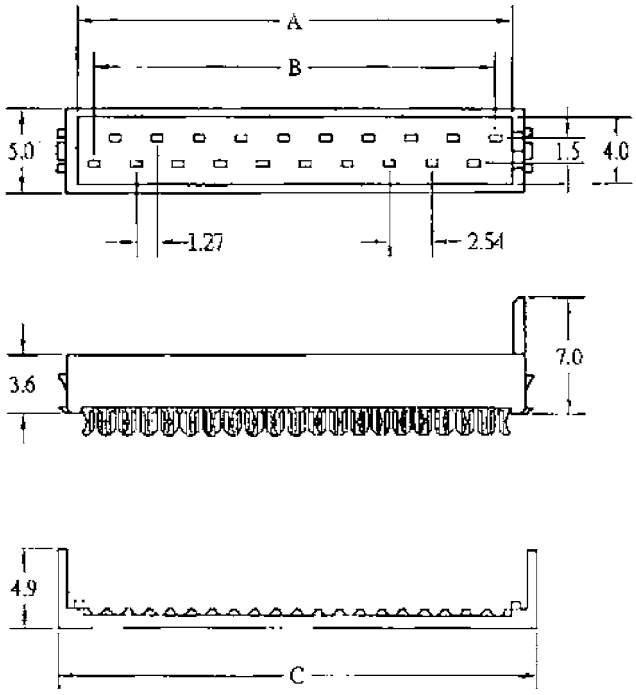

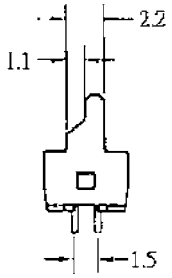

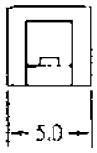

Standard Types

Part Number	Pin Count	A	B	C
MCP-6-I9-LL	6	8.38	6.35	11.00
MCP-8-I9-LL	8	10.92	8.89	13.54
MCP-10-I9-LL	10	13.46	11.43	16.08
MCP-12-I9-LL	12	16.00	13.97	18.62
MCP-14-I9-LL	14	18.54	16.51	21.16
MCP-16-I9-LL	16	21.08	19.05	23.70

The following pin counts are available on request, please contact Yamaichi

Part Number	Pin Count	A	B	c
MCP-4-I9-LL	4	5.84	3.81	8.46
MCP-18-I9-LL	18	23.62	21.59	26.24
MCP-20-I9-LL	20	26.16	24.13	28.78
MCP-22-I9-LL	22	28.70	26.67	31.32
MCP-24-I9-LL	24	31.24	29.21	33.86
MCP-26-I9-LL	26	33.78	31.75	36.40

SPECIFICATIONS

Insulation Resistance:	1,000MΩ min. at 500V DC
Withstanding Voltage:	500V ACrms for 1 minute
Contact Resistance:	15mΩ max. at 10mA
Current Rating:	1A
Operating Temp. Range:	-20°C to +85°C
Soldering Temperature:	260°C / 5 sec.

MATERIALS AND FINISH

Housing:	PBT (glass filled), UL 94V-0 rated
Contacts:	Phosphor Bronze
Plating:	Au over Ni

PART NUMBER

NFP - 20A - 01 * 2 BF

- Series (plug)
- No. of Leads
- Latch Type: 1 = Short Latch 2 = Long Latch
- Terminal Type: 2 = Right Angle Solder Dip
- Type of Plating:

	Base	Mating Face	Solder Terminals
BF	Ni 2.5~4.5μm	Au 0.3μm min.	Au 0.05μm min.

FEATURES

- Contact pitch 1.27mm connectors for high-density mounting

OUTLINE DIMENSIONS

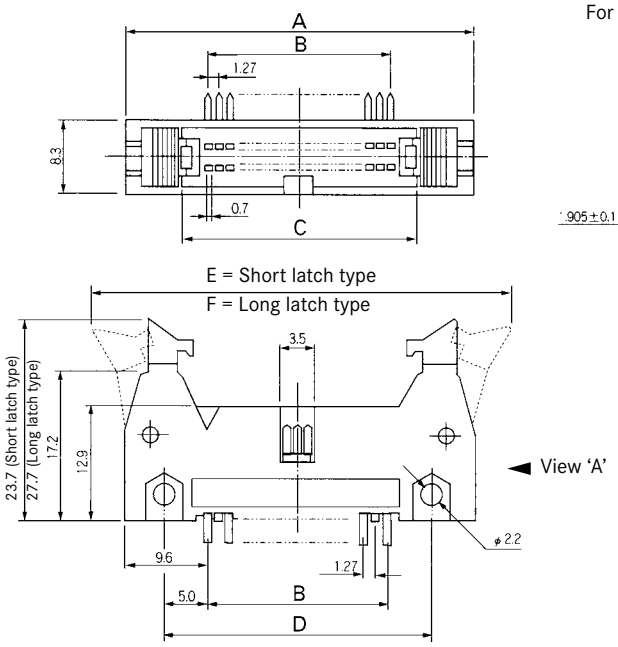

RECOMMENDED PCB LAYOUT

For leads 10, 26, 34 and 50

For all other leads

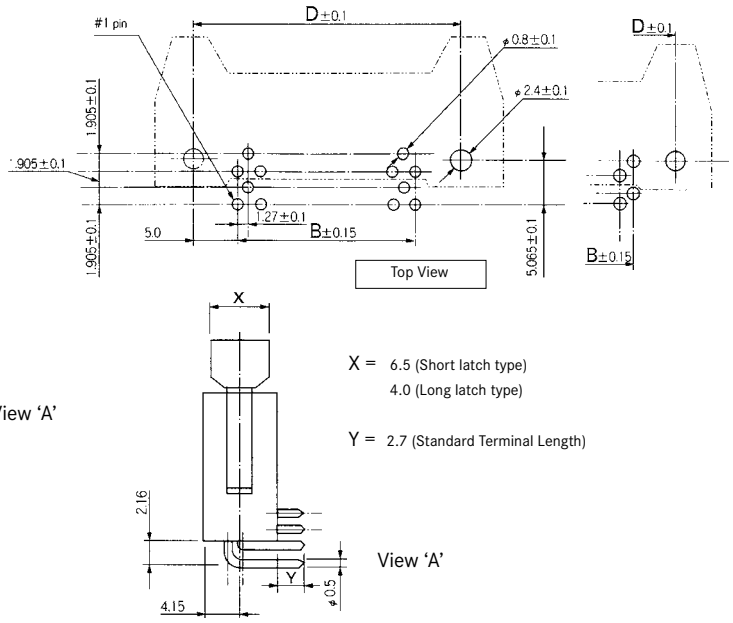

Standard types see table.
For other versions please contact Yamaichi, minimum order quantity may be required

Part Number	No. of Leads	A	B	C	D	E	F
NFP-10A-0122BF	10	24.28	5.08	11.58	15.08	38.2	40.2
NFP-16A-0122BF	16	28.09	8.89	15.39	18.89	42.0	44.0
NFP-20A-0112BF	20	30.63	11.43	17.93	21.43	44.6	46.6
NFP-26A-0112BF	26	34.44	15.24	21.74	25.24	48.4	50.4
NFP-34A-0112BF	34	39.52	20.32	26.82	30.32	53.5	55.5
NFP-34A-0122BF	34	39.52	20.32	26.82	30.32	53.5	55.5
NFP-40A-0112BF	40	43.33	24.12	30.63	34.13	57.3	59.3
NFP-40A-0122BF	40	43.33	24.12	30.63	34.13	57.3	59.3
NFP-50A-0112BF	50	49.68	30.48	36.98	40.48	63.6	65.6
NFP-60A-0112BF	60	56.03	36.83	43.33	46.83	70.0	72.0
NFP-60A-0122BF	60	56.03	36.83	43.33	46.83	70.0	72.0
NFP-64A-0112BF	64	58.57	39.37	45.87	49.37	72.5	74.5
NFP-64A-0122BF	64	58.57	39.37	45.87	49.37	72.5	74.5
NFP-80A-0112BF	80	68.73	49.53	56.03	59.53	82.7	84.7
NFP-80A-0122BF	80	68.73	49.53	56.03	59.53	82.7	84.7
NFP-100A-0112BF	100	81.43	62.23	68.73	72.23	95.4	97.4
NFP-100A-0122BF	100	81.43	62.23	68.73	72.23	95.4	97.4

SPECIFICATIONS

Insulation Resistance:	1,000MΩ min. at 500V DC
Withstanding Voltage:	500V ACrms for 1 minute
Contact Resistance:	15mΩ max. at 10mA
Current Rating:	1A
Operating Temp. Range:	-20°C to +85°C
Soldering Temperature:	260°C / 5 sec.

MATERIALS AND FINISH

Housing:	PBT (glass filled), UL 94V-0 rated
Contacts:	Phosphor Bronze
Plating:	Au over Ni

FEATURES

- Contact pitch 1.27mm connectors for high-density mounting

PART NUMBER

NFP - 64A - 0* * 4 BF

- Series (plug)
- No. of Leads
- Board Screw Option:
  1 = Provided (Standard)
  3 = Not Provided
- Latch Type:
  0 = Without Latch
  1 = Short Latch
  2 = Long Latch
- Terminal Type: 4 = Straight Solder Dip
- Type of Plating:

	Base	Mating Face	Solder Terminals
BF	Ni 2.5~4.5μm	Au 0.3μm min.	Au 0.05μm min.

OUTLINE DIMENSIONS

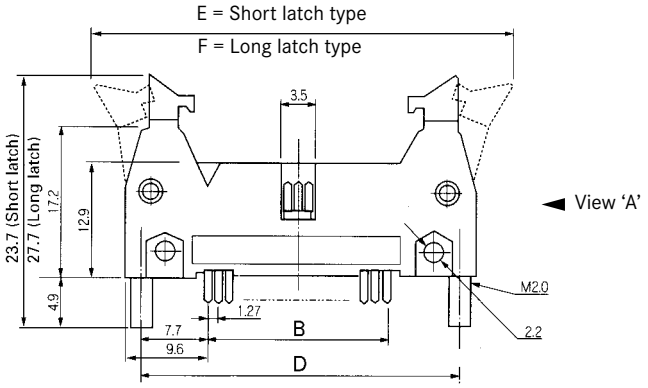

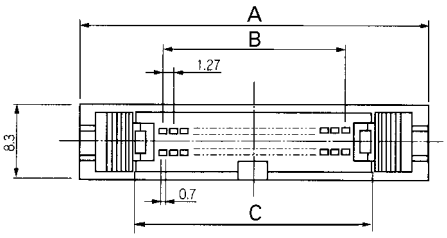

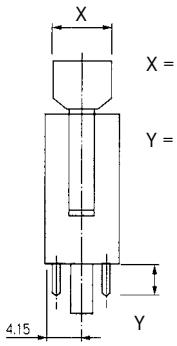

X = 6.5 (Short latch type)
4.0 (Long latch type)

Y = 2.7 (Standard Terminal Length)

View 'A'

Standard types see table. For other versions please contact Yamaichi, minimum order quantity may be required

Part Number	No. of Leads	A	B	C	D	E	F
NFP-10A-0114BF	10	24.28	5.08	11.58	20.48	38.2	40.2
NFP-10A-0124BF	10	24.28	5.08	11.58	20.48	38.2	40.2
NFP-16A-0104BF	16	28.09	8.89	15.39	24.29	42.0	44.0
NFP-16A-0114BF	16	28.09	8.89	15.39	24.29	42.0	44.0
NFP-20A-0114BF	20	30.63	11.43	17.93	26.83	44.6	46.6
NFP-20A-0124BF	20	30.63	11.43	17.93	26.83	44.6	46.6
NFP-26A-0114BF	26	34.44	15.24	21.74	30.64	48.4	50.4
NFP-26A-0124BF	26	34.44	15.24	21.74	30.64	48.4	50.4
NFP-34A-0114BF	34	39.52	20.32	26.82	35.72	53.5	55.5
NFP-34A-0124BF	34	39.52	20.32	26.82	35.72	53.5	55.5
NFP-40A-0114BF	40	43.33	24.12	30.63	39.53	57.3	59.3
NFP-40A-0124BF	40	43.33	24.12	30.63	39.53	57.3	59.3
NFP-50A-0124BF	50	49.68	30.48	36.98	45.88	63.6	65.6
NFP-50A-0314BF	50	49.68	30.48	36.98	45.88	63.6	65.6
NFP-50A-0324BF	50	49.68	30.48	36.98	45.88	63.6	65.6
NFP-60A-0314BF	60	56.03	36.83	43.33	52.23	70.0	72.0
NFP-64A-0104BF	64	58.57	39.37	45.87	54.77	72.5	74.5
NFP-64A-0114BF	64	58.57	39.37	45.87	54.77	72.5	74.5
NFP-64A-0124BF	64	58.57	39.37	45.87	54.77	72.5	74.5
NFP-64A-0314BF	64	58.57	39.37	45.87	54.77	72.5	74.5
NFP-64A-0324BF	64	58.57	39.37	45.87	54.77	72.5	74.5
NFP-80A-0114BF	80	68.73	49.53	56.03	64.93	82.7	84.7
NFP-80A-0124BF	80	68.73	49.53	56.03	64.93	82.7	84.7
NFP-80A-0314BF	80	68.73	49.53	56.03	64.93	82.7	84.7
NFP-100A-0114BF	100	81.43	62.23	68.73	77.63	95.4	97.4
NFP-100A-0124BF	100	81.43	62.23	68.73	77.63	95.4	97.4
NFP-100A-0314BF	100	81.43	62.23	68.73	77.63	95.4	97.4
NFP-100A-0324BF	100	81.43	62.23	68.73	77.63	95.4	97.4

RECOMMENDED PCB LAYOUT

Top View from Socket

For leads 10, 26, 34 and 50

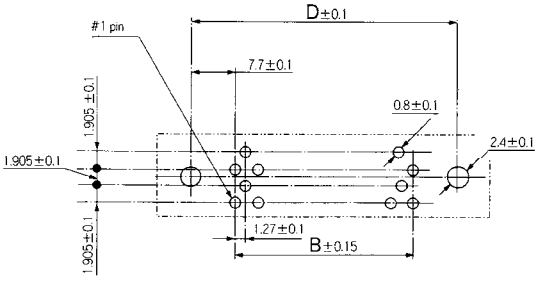

For all other leads

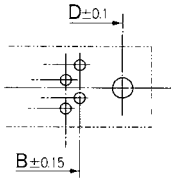

SPECIFICATIONS

Insulation Resistance:	1,000MΩ min. at 500V DC
Withstanding Voltage:	500V ACrms for 1 minute
Contact Resistance:	15mΩ max. at 10mA
Current Rating:	1A
Operating Temp. Range:	-20°C to +85°C

MATERIALS AND FINISH

Housing:	PBT (glass filled), UL 94V-0 rated
Contacts:	Beryllium Copper
Plating:	Au over Ni

FEATURES

- Contact pitch 1.27mm connectors for high-density mounting
- Unique three-fork contact of IDC type allows termination of 0.635mm pitch flat cable

JIGS AND TOOLS

- Hand press: FX-003
- Applicable jig: NFA-005
- Platen: Standard platen

PART NUMBER

NFS - 10A - 0110 BF

- NFS: Series (socket)
- 10A: No. of Leads
- 0110: 0 = Without Strain Relief (Connector Height = 11.30mm)
- BF: Type of Plating:

	Base	Mating Face	Solder Terminals
BF	Ni 2.5~4.5μm	Au 0.3μm min.	Au 0.05μm min.

PART NUMBER (STRAIN RELIEF)

NFS-**A-0001 (Connector Height = 15.10mm)

APPLICABLE CABLES

AWG 30 stranded wire, AWG 30 solid wire, 0.635mm pitch (e.g. FLEX-*2, see Section Cables)

OUTLINE DIMENSIONS

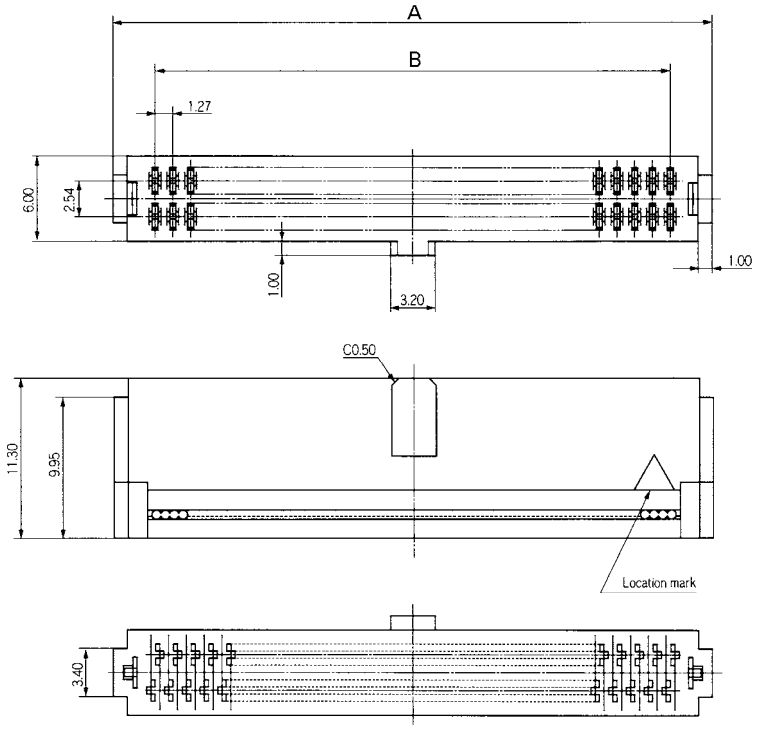

CONTACT DETAILS

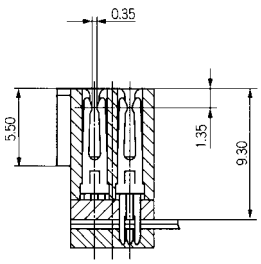

Part Number	Pin Count	A	B
NFS-10A-0110BF	10	11.08	5.08
NFS-16A-0110BF	16	14.89	8.89
NFS-20A-0110BF	20	17.43	11.43
NFS-26A-0110BF	26	21.24	15.24
NFS-34A-0110BF	34	26.32	20.32
NFS-40A-0110BF	40	30.13	24.12

Part Number	Pin Count	A	B
NFS-50A-0110BF	50	36.48	30.48
NFS-60A-0110BF	60	42.83	36.83
NFS-64A-0110BF	64	45.37	39.37
NFS-80A-0110BF	80	55.53	49.53
NFS-100A-0110BF	100	68.23	62.23

SPECIFICATIONS

Insulation Resistance:	1,000MΩ min. at 500V DC
Withstanding Voltage:	500V ACrms for 1 minute
Contact Resistance:	15mΩ max. at 10mA
Current Rating:	1A
Operating Temp. Range:	-20°C to +85°C
Soldering Temperature:	260°C / 5 sec.

MATERIALS AND FINISH

Housing:	PBT (glass filled), UL 94V-0 rated
Contacts:	Beryllium Copper
Plating:	Au over Ni

FEATURES

- Contact pitch 1.27mm connectors for high-density mounting
- Variations include cable connection and board-to-board connection types
- Unique three-fork contact of IDC type allows termination of 0.635mm pitch flat cable

JIGS AND TOOLS

- Hand press: FX-003
- Applicable jig: NFG-105
- Platen: Standard platen

PART NUMBER

NFP - 10G - 0100 **

Series (plug)

No. of Leads

Type of Plating:

	Base	Mating Face	Solder Terminals
BF	Ni 2.5~4.5μm	Au 0.3μm min.	Au 0.05μm min.
FF	Ni 2.5~4.5μm	Au 0.5μm min.	Au 0.05μm min.

APPLICABLE CABLES

AWG 30 stranded wire, AWG 30 solid wire, 0.635mm pitch (e.g. FLEX-*S, see Section Cables)

OUTLINE DIMENSIONS

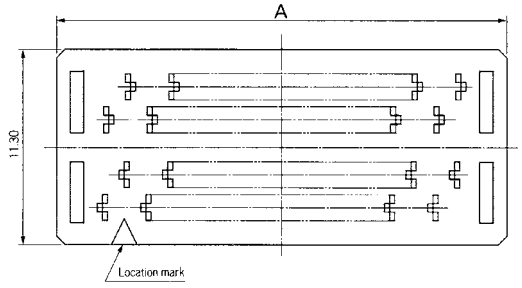

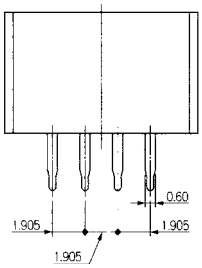

View 'A'

◄ View 'A'

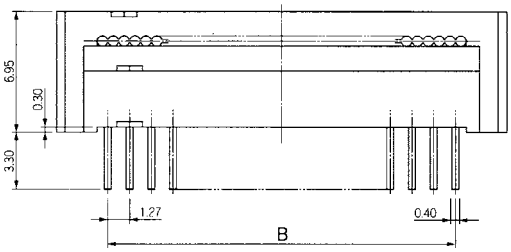

RECOMMENDED PCB LAYOUT

Top View from Socket

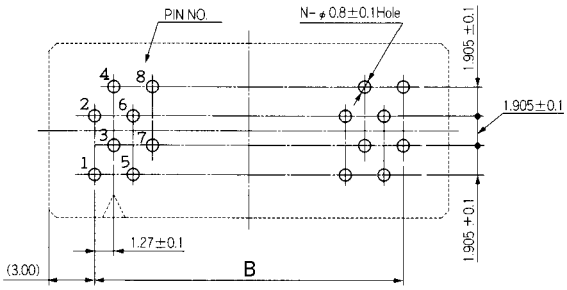

1) For the following versions below please contact Yamaichi, minimum order quantity may be required

Part Number	Pin Count	A	B
NFP-10G-0100BF	10	11.08	5.08
NFP-10G-0100FF 1)	10	11.08	5.08
NFP-16G-0100BF	16	14.89	8.89
NFP-16G-0100FF 1)	16	14.89	8.89
NFP-20G-0100BF	20	17.43	11.43
NFP-20G-0100FF	20	17.43	11.43
NFP-26G-0100BF	26	21.24	15.24
NFP-26G-0100FF	26	21.24	15.24
NFP-34G-0100BF	34	26.32	20.32
NFP-34G-0100FF	34	26.32	20.32
NFP-40G-0100BF	40	30.13	24.12
NFP-40G-0100FF	40	30.13	24.12

Part Number	Pin Count	A	B
NFP-50G-0100BF	50	36.48	30.48
NFP-50G-0100FF	50	36.48	30.48
NFP-60G-0100BF	60	42.83	36.83
NFP-60G-0100FF 1)	60	42.83	36.83
NFP-64G-0100BF	64	45.37	39.37
NFP-64G-0100FF	64	45.37	39.37
NFP-80G-0100BF	80	55.53	49.53
NFP-80G-0100FF	80	55.53	49.53
NFP-100G-0100BF	100	68.23	62.23
NFP-100G-0100FF	100	68.23	62.23

SPECIFICATIONS

Insulation Resistance:	1,000MΩ min. at 500 V DC
Withstanding Voltage:	500 V ACrms for 1 minute
Contact Resistance:	15mΩ max. at 10mA
Current Rating:	1A
Operating Temp. Range:	-20°C to +85°C
Soldering Temperature:	260°C / 5 sec.

MATERIALS AND FINISH

Housing:	PBT (glass filled), UL 94V-0 rated
Contacts:	Phosphor Bronze
Plating:	Au over Ni

FEATURES

- Contact pitch 1.27mm connectors for high-density mounting

PART NUMBER

NFP - 50A - 0132 BF

- Series (plug)
- No. of Leads
- 2 = Right Angle Solder Dip
- Type of Plating:

	Base	Mating Face	Solder Terminals
BF	Ni 2.5~4.5μm	Au 0.3μm min.	Au 0.05μm min.

OUTLINE DIMENSIONS

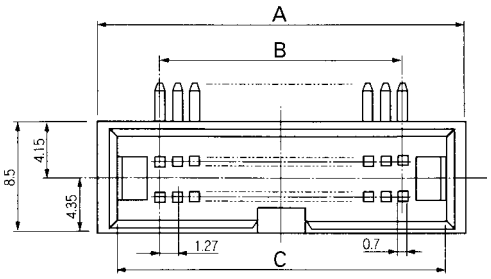

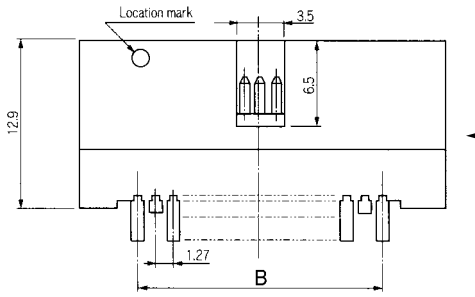

View 'A'

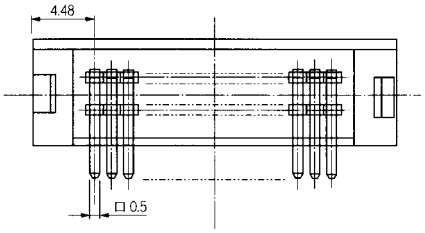

View 'A'

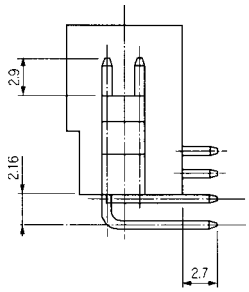

RECOMMENDED PCB LAYOUT

Top View

For all other leads

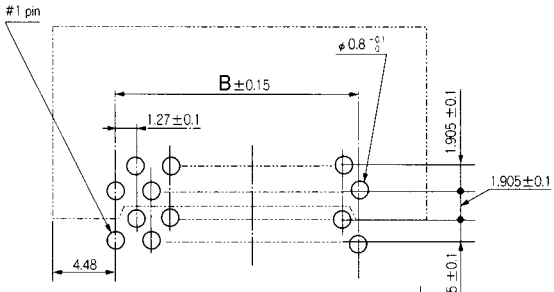

For lead 80

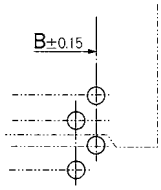

[1] For the following versions below please contact Yamaichi, minimum order quantity may be required

Part Number	No. of Leads	A	B	C
NFP-10A-0132BF	10	14.04	5.08	11.58
NFP-16A-0132BF	16	17.85	8.89	15.39
NFP-20A-0132BF	20	20.39	11.43	17.93
NFP-26A-0132BF	26	24.20	15.24	21.74
NFP-34A-0132BF	34	29.28	20.32	26.82
NFP-40A-0132BF [1]	40	33.09	24.13	30.63
NFP-50A-0132BF	50	39.44	30.48	36.98
NFP-60A-0132BF [1]	60	45.79	36.83	43.33
NFP-64A-0132BF [1]	64	48.33	39.37	45.87
NFP-80A-0132BF	80	58.49	49.53	56.03

SPECIFICATIONS

Insulation Resistance:	1,000MΩ min. at 500V DC
Withstanding Voltage:	500V ACrms for 1 minute
Contact Resistance:	15mΩ max. at 10mA
Current Rating:	1A
Operating Temp. Range:	-20°C to +85°C
Soldering Temperature:	260°C / 5 sec.

MATERIALS AND FINISH

Housing:	PBT (glass filled), UL 94V-0 rated
Contacts:	Phosphor Bronze
Plating:	Au over Ni

FEATURES

- Contact pitch 1.27mm connectors for high-density mounting

PART NUMBER

NFP - 50A - 0134 BF

- Series (plug)
- No. of Leads
- 4 = straight Solder Dip
- Type of Plating:

	Base	Mating Face	Solder Terminals
BF	Ni 2.5~4.5µm	Au 0.3µm min.	Au 0.05µm min.

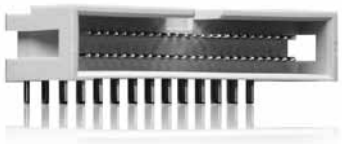

OUTLINE DIMENSIONS

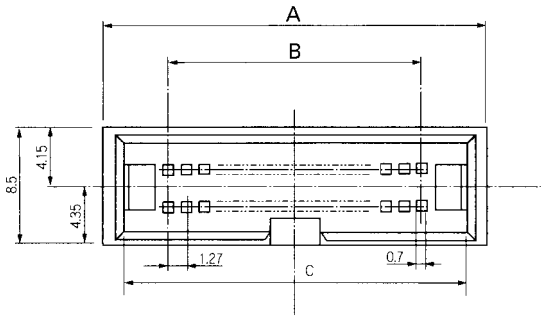

View 'A'

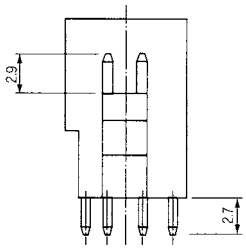

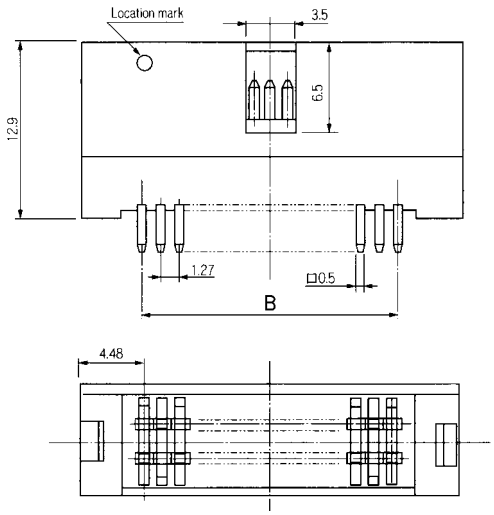

◄ View 'A'

RECOMMENDED PCB LAYOUT

For all other leads

Top View

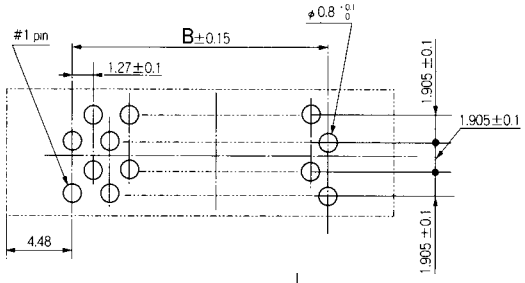

For leads 40 and 80

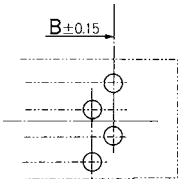

[1] For the following versions below please contact Yamaichi, minimum order quantity may be required

Part Number	No. of Leads	A	B	C
NFP-16A-0134BF	16	17.85	8.89	15.39
NFP-20A-0134BF	20	20.39	11.43	17.93
NFP-26A-0134BF	26	24.20	15.24	21.74
NFP-34A-0134BF	34	29.28	20.32	26.82
NFP-40A-0134BF	40	33.09	24.13	30.63
NFP-50A-0134BF	50	39.44	30.48	36.98
NFP-60A-0134BF [1]	60	45.79	36.83	43.33
NFP-68A-0134BF [1]	68	50.87	41.91	47.91
NFP-80A-0134BF	80	58.49	49.53	56.03
NFP-80A-0132BF	80	58.49	49.53	56.03

SPECIFICATIONS

Insulation Resistance:	500MΩ min. at 500V DC
Withstanding Voltage:	500V ACrms for 1 minute
Contact Resistance:	35mΩ max. at 10mA
Current Rating:	0.5A
Operating Temp. Range:	-55°C to +85°C
Mating Cycles:	500 insertions
Soldering Temp.:	260°C / 3 sec.

PART NUMBER

NDP - 050 - 002 BF

- NDP: Series (plug)
- 050: No. of Leads
- 002: Terminal Type: 2 = Right Angle Solder Dip
- BF: Contact Plating:
  Mating Face - Au (0.3μm min.) over Ni
  Solder Terminals - Au (0.05μm min.) over Ni

MATERIALS AND FINISH

Housing:	PPS (glass filled), UL 94V-0 rated
Contacts:	Copper Alloy
Plating:	Mating Face Contacts - Au over Ni
	Solder Terminals - Au over Ni

FEATURES

- Low insertion and extraction forces due to bellows type contacts

OUTLINE DIMENSIONS

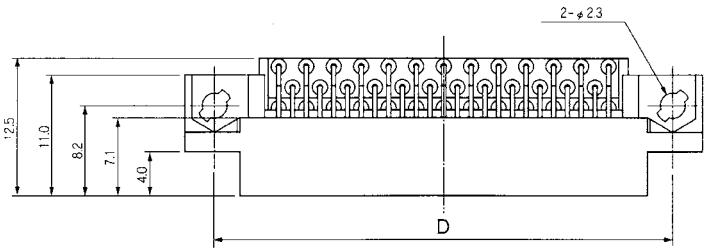

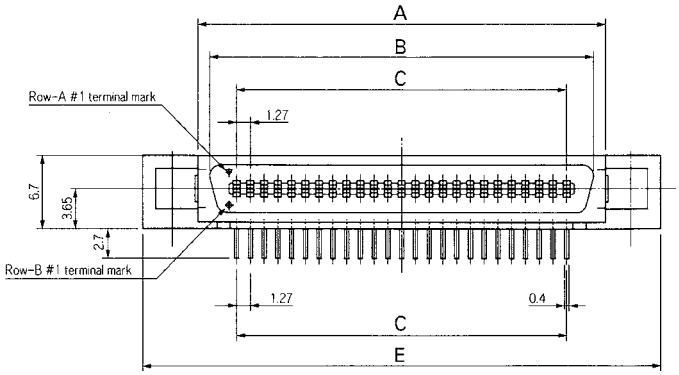

CONTACT DETAILS

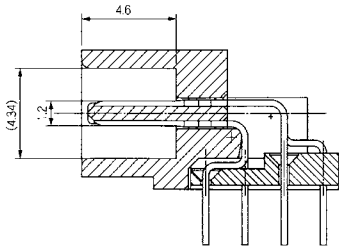

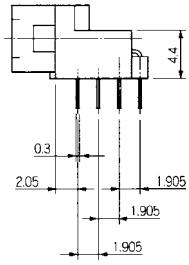

RECOMMENDED PCB LAYOUT

For 14, 26, 30 and 50 Leads only

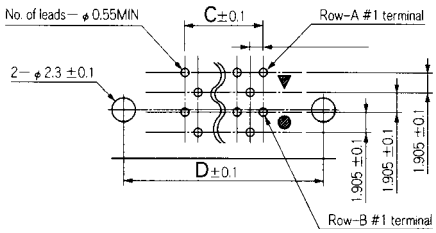

For All Other Leads

Top View

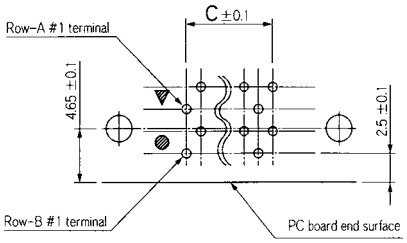

[1] For the following versions below please contact Yamaichi, minimum order quantity may be required

Part Number	No. of Leads	A	B	C	D	E
NDP036-002-BF	36	28.75	26.55	21.59	33.43	38.93
NDP040-002-BF	40	31.29	29.09	24.13	35.97	41.47
NDP068-002-BF [1]	68	49.07	46.87	41.91	53.75	59.25
NDP100-002-BF [1]	100	69.39	67.19	62.23	74.04	79.57
NDP128-002-BF	128	87.17	84.97	80.01	91.85	97.35

SPECIFICATIONS

Insulation Resistance:	500MΩ min. at 500V DC
Withstanding Voltage:	500V ACrms for 1 minute
Contact Resistance:	35mΩ max. at 10mA
Current Rating:	0.5A
Operating Temp. Range:	-55°C to +85°C
Mating Cycles:	500 insertions
Soldering Temp.:	260°C / 5 sec.

MATERIALS AND FINISH

Housing:	PPS (glass filled), UL 94V-0 rated
Contacts:	Copper Alloy
Plating:	Mating Face Contacts - Au over Ni
	Solder Terminals - Au over Ni

FEATURES

- Low insertion and extraction forces due to bellows type contacts

PART NUMBER

NDP - 050 - 004 BF

- Series (plug)
- No. of Leads
- Terminal Type: 4 = Straight Solder Dip
- Contact Plating:
  Mating Face - Au (0.3µm min.) over Ni
  Solder Terminals - Au (0.05µm min.) over Ni

OUTLINE DIMENSIONS

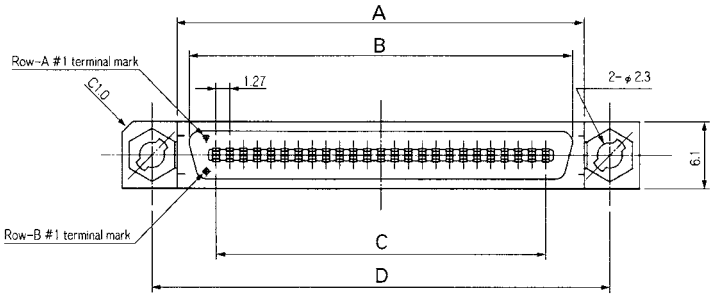

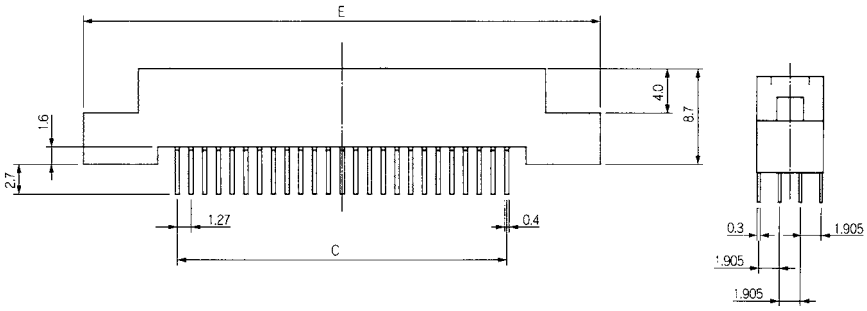

CONTACT DETAILS

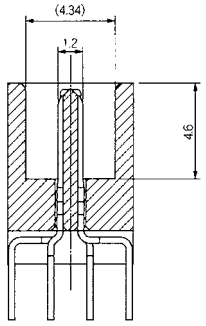

RECOMMENDED PCB LAYOUT

For 50 Leads only

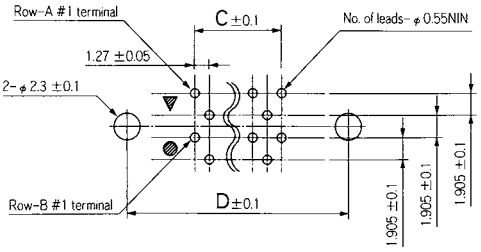

For All Other Leads

Top View

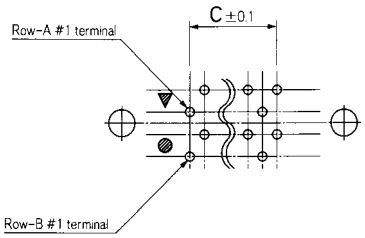

[1] For the following versions below please contact Yamaichi, minimum order quantity may be required

Part Number	No. of Leads	A	B	C	D	E
NDP036-004-BF	36	28.75	26.55	21.59	33.43	38.93
NDP050-004-BF	50	37.64	35.44	30.48	42.32	47.82
NDP068-004-BF [1]	68	49.07	46.87	41.91	53.75	59.25
NDP100-004-BF [1]	100	69.39	67.19	62.23	74.04	79.57
NDP128-004-BF [1]	128	87.17	84.97	80.01	91.85	97.35

SPECIFICATIONS

Insulation Resistance:	500MΩ min. at 500V DC
Withstanding Voltage:	500V ACrms for 1 minute
Contact Resistance:	35mΩ max. at 10mA
Current Rating:	0.5A
Operating Temp. Range:	-55°C to +85°C
Mating Cycles:	500 insertions
Soldering Temp.:	220°C min. / 60 sec., 250°C peak

PART NUMBER

NDP - 050 - 003 BF

- NDP: Series (plug)
- 050: No. of Leads
- 003: Terminal Type: 3 = Right AngleSMT
- BF: Contact Plating:
  Mating Face - Au (0.3μm min.) over Ni
  Solder Terminals - Au (0.05μm min.) over Ni

MATERIALS AND FINISH

Housing:	PPS (glass filled), UL 94V-0 rated
Contacts:	Copper Alloy
Plating:	Mating Face Contacts - Au over Ni
	Solder Terminals - Au over Ni

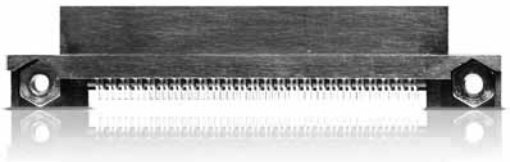

FEATURES

- Low insertion and extraction forces due to bellows type contacts

OUTLINE DIMENSIONS

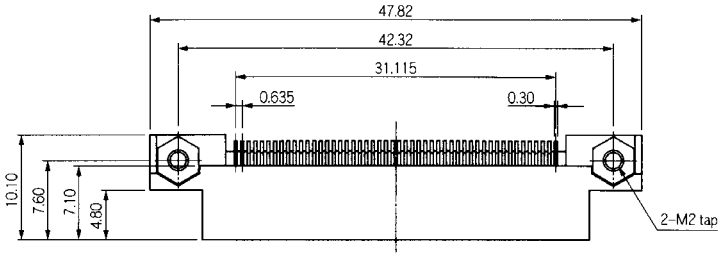

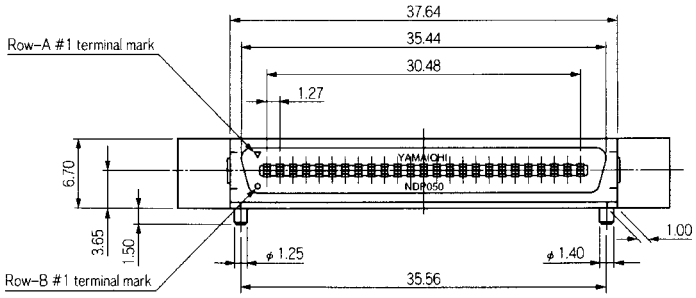

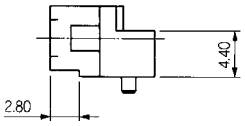

RECOMMENDED PCB LAYOUT

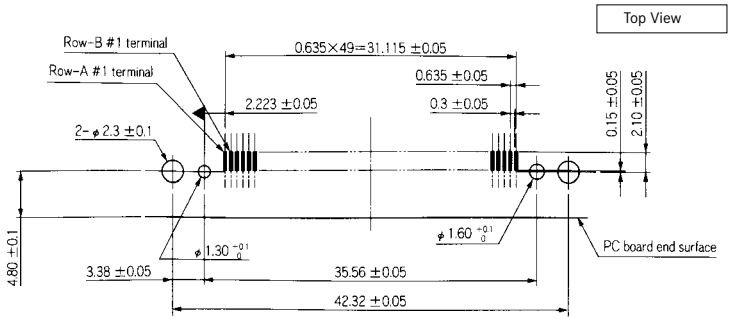

CONTACT DETAILS

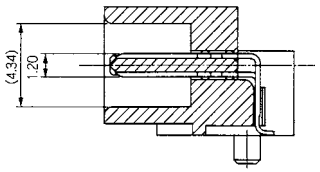

SPECIFICATIONS

Insulation Resistance:	500MΩ min. at 500V DC
Withstanding Voltage:	500V ACrms for 1 minute
Contact Resistance:	35mΩ max. at 10mA
Current Rating:	0.5A
Operating Temp. Range:	–55°C to +85°C
Mating Cycles:	500 insertions
Soldering Temp.:	230°C / 10 sec.

PART NUMBER

NDS - 050 - 002 BF

- Series (plug)
- No. of Leads
- Terminal Type: 2 = Right Angle Solder Dip
- Contact Plating:
  Mating Face - Au (0.3µm min.) over Ni
  Solder Terminals - Au (0.05µm min.) over Ni

MATERIALS AND FINISH

Housing:	PPS (glass filled), UL 94V-0 rated
Contacts:	Copper Alloy
Plating:	Mating Face Contacts - Au over Ni
	Solder Terminals - Au over Ni

FEATURES

- Low insertion and extraction forces due to bellows type contacts

OUTLINE DIMENSIONS

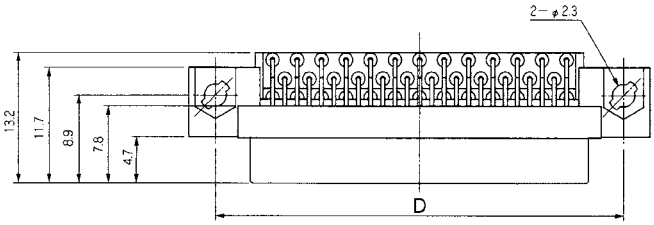

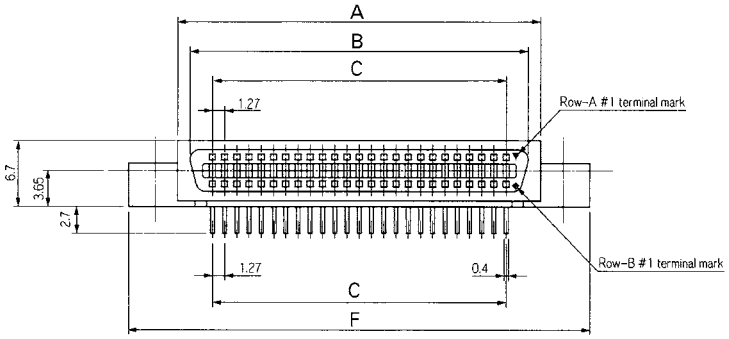

CONTACT DETAILS

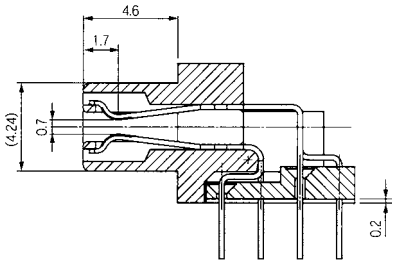

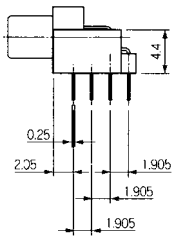

RECOMMENDED PCB LAYOUT

For 50 Leads only

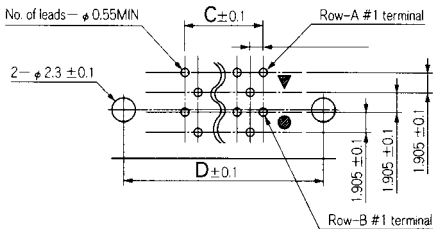

For All Other Leads

Top View

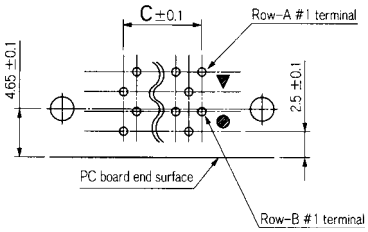

[1] For the following versions below please contact Yamaichi, minimum order quantity may be required

Part Number	No. of Leads	A	B	C	D	E
NDS036-002-BF	36	28.75	26.17	21.59	33.43	38.93
NDS040-002-BF	40	31.29	28.71	24.13	35.97	41.47
NDS050-002-BF	50	37.64	35.06	30.48	42.32	47.82
NDS080-002-BF [1]	80	56.69	54.11	49.53	61.37	66.87
NDS100-002-BF	100	69.39	66.81	62.23	74.04	79.57
NDS120-002-BF	120	82.09	79.51	74.93	86.77	92.27
NDS128-002-BF	128	87.17	84.59	80.01	91.85	97.35

SPECIFICATIONS

Insulation Resistance:	500MΩ min. at 500 V DC
Withstanding Voltage:	500 V ACrms for 1 minute
Contact Resistance:	35mΩ max. at 10mA
Current Rating:	0.5A
Operating Temp. Range:	–55°C to +85°C
Mating Cycles:	500 insertions
Soldering Temp.:	230°C / 10 sec.

MATERIALS AND FINISH

Housing:	PPS (glass filled), UL 94V-0 rated
Contacts:	Copper Alloy
Plating:	Mating Face Contacts - Au over Ni
	Solder Terminals - Au over Ni

FEATURES

- Low insertion and extraction forces due to bellows type contacts

PART NUMBER

NDS - 050 - 004 BF

- Series (socket)
- No. of Leads
- Terminal Type: 4 = Straight Solder Dip
- Contact Plating:
  Mating Face - Au (0.3µm min.) over Ni
  Solder Terminals - Au (0.05µm min.) over Ni

OUTLINE DIMENSIONS

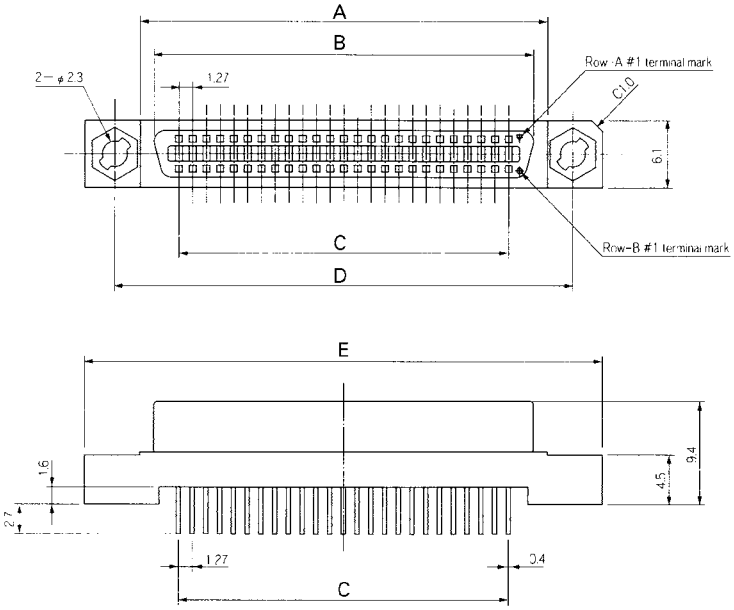

CONTACT DETAILS

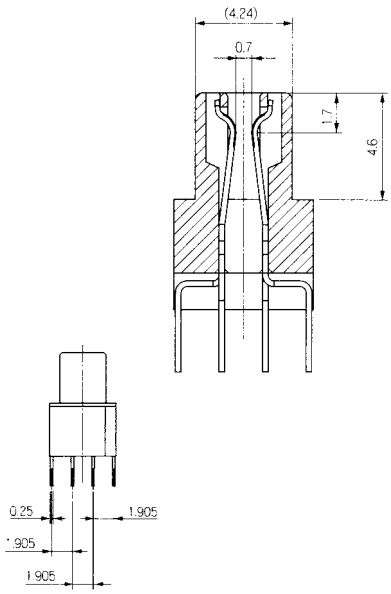

RECOMMENDED PCB LAYOUT

For 50 Leads only

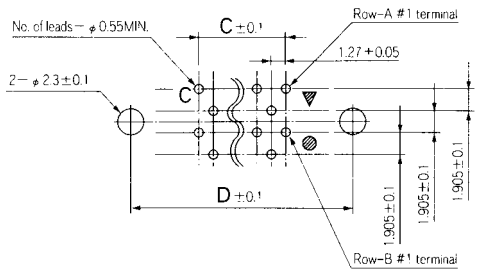

For All Other Leads

Top View

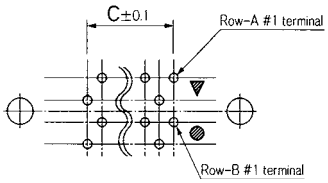

[1] For the following version below please contact Yamaichi, minimum order quantity may be required

Part Number	No. of Leads	A	B	C	D	E
NDS036-004-BF	36	28.75	26.17	21.59	33.43	38.93
NDS040-004-BF	40	31.29	28.71	24.13	35.97	41.47
NDS050-004-BF	50	37.64	35.06	30.48	42.32	47.82
NDS068-004-BF	68	49.07	46.49	41.91	53.75	59.25
NDS080-004-BF [1]	80	56.69	54.11	49.53	61.37	66.87
NDS120-004-BF	120	82.09	79.51	74.93	86.77	92.27
NDS128-004-BF	128	87.17	84.59	80.01	91.85	97.35

SPECIFICATIONS

Insulation Resistance:	500MΩ min. at 500 V DC
Withstanding Voltage:	500 V ACrms for 1 minute
Contact Resistance:	35mΩ max. at 10mA
Current Rating:	0.5A
Operating Temp. Range:	-55°C to +85°C
Mating Cycles:	500 insertions
Soldering Temp.:	220°C min. / 60 sec., 250°C peak

MATERIALS AND FINISH

Housing:	PPS (glass filled), UL 94V-0 rated
Contacts:	Copper Alloy
Plating:	Mating Face Contacts - Gold over Nickel
	Solder Terminals - Au over Nickel

FEATURES

- Low insertion and extraction forces due to bellows type contacts

PART NUMBER

NDS - 050 - 005 BF 1

- Series (socket)
- No. of Leads
- Terminal Type: 5 = Straight SMT
- Contact Plating:
  Mating Face - Au (0.3μm min.) over Ni (2.5~4.5μm)
  Solder Terminals - Au (0.05μm) over Ni (2.5~4.5μm)
- Press-fit Nut Option:
  Unmarked = Without Nut 1 = With Nut

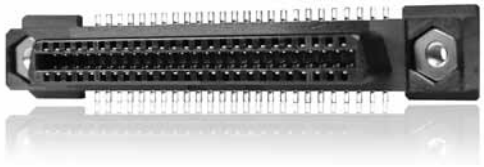

OUTLINE DIMENSIONS

Without press-fit nut

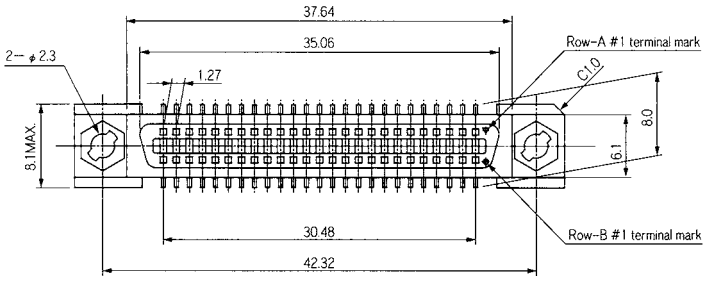

With press-fit nut

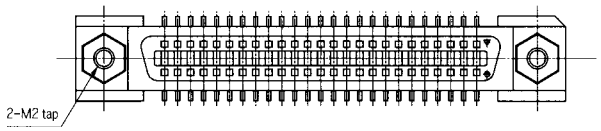

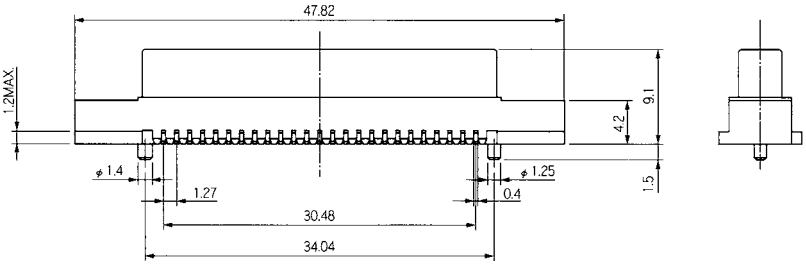

CONTACT DETAILS

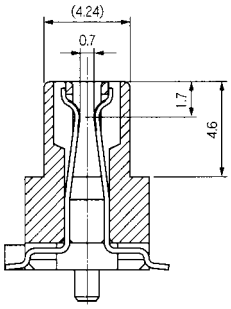

RECOMMENDED PCB LAYOUT

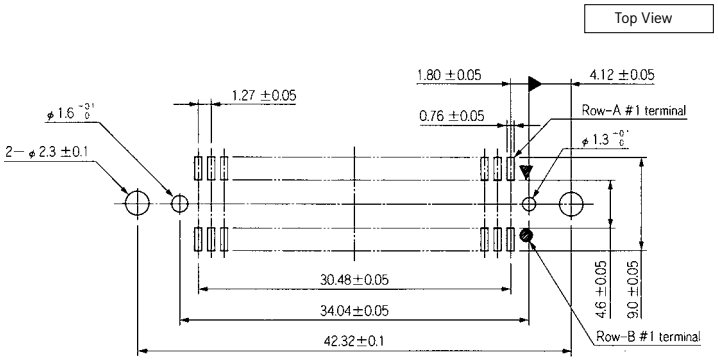

NDP***-004-BF NDS***-004-BF

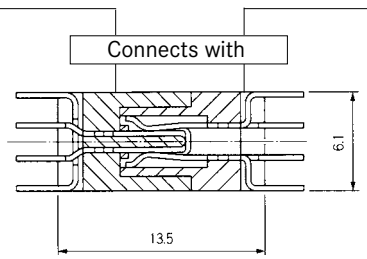

NDP***-004-BF NDS***-002-BF

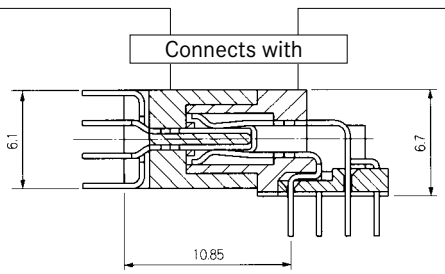

NDP***-002-BF NDS***-004-BF

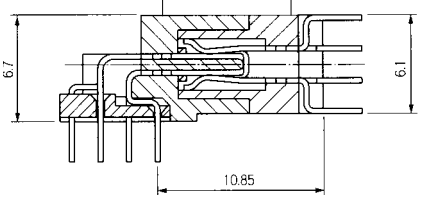

NDP***-002-BF NDS***-002-BF

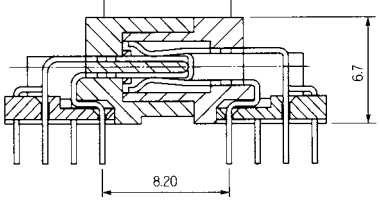

NDP050-003-BF NDS050-004-BF

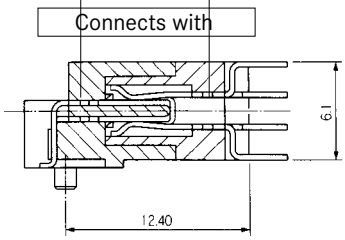

NDP050-003-BF NDS050-002-BF

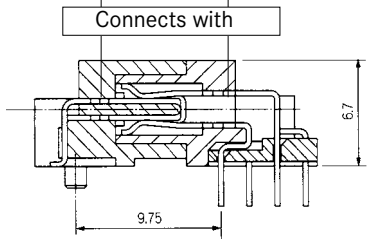

NDP050-002-BF NDS050-005-BF

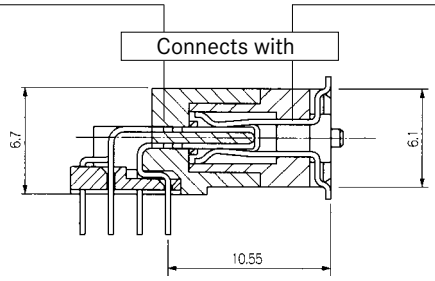

NDP050-003-BF NDS050-005-BF

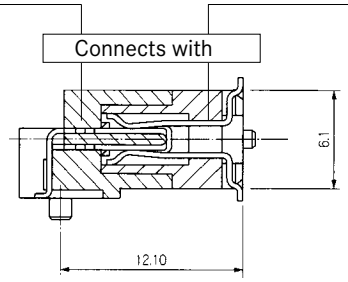

NDP050-004-BF NDS050-005-BF

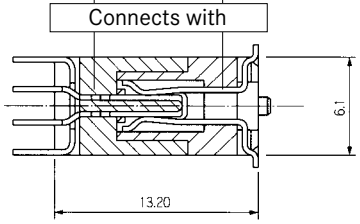

SPECIFICATIONS

Insulation Resistance:	100MΩ min.
Voltage Rating:	50V AC
Withstanding Voltage:	200V ACrms
Current Rating:	0.5A
Contact Resistance:	50mΩ max. initial
Operating Temp. Range:	-40°C to +80°C
Mating Force:	90g max. / contact
Unmating Force:	10g min. / contact
Mating Cycles:	50 insertions
Soldering Temp.:	230°C min. / 60 sec., 260°C peak

MATERIALS AND FINISH

Housing:	High Temperature Thermoplastic, UL 94V-0 rated
Contacts:	Copper Alloy (t=0.2mm)
	Mating Area - Au Flash
	Solder Area - Au Flash or Sn
Fitting Nail:	Copper Alloy (t=0.2mm), lead free solder

FEATURES

- Pin counts from 10 to 80
- Various mating heights

PART NUMBER

RDS 60 - 0** - 005 F *

Series

Pin Count

Height Coding *see drawing

Code	Dim H*	Dim G*
020	2.0mm	1.5mm
030	3.0mm	2.5mm
040	4.0mm	3.5mm

180° SMT

F = Au Flash (Mating Area)

Solder Area:
F = Au Flash (Dim H = 2.0mm only)
L = Sn (Dim H = 3.0 and 4.0mm only)

Note: Heights of 2.5 and 8.0 available on request

OUTLINE DIMENSIONS

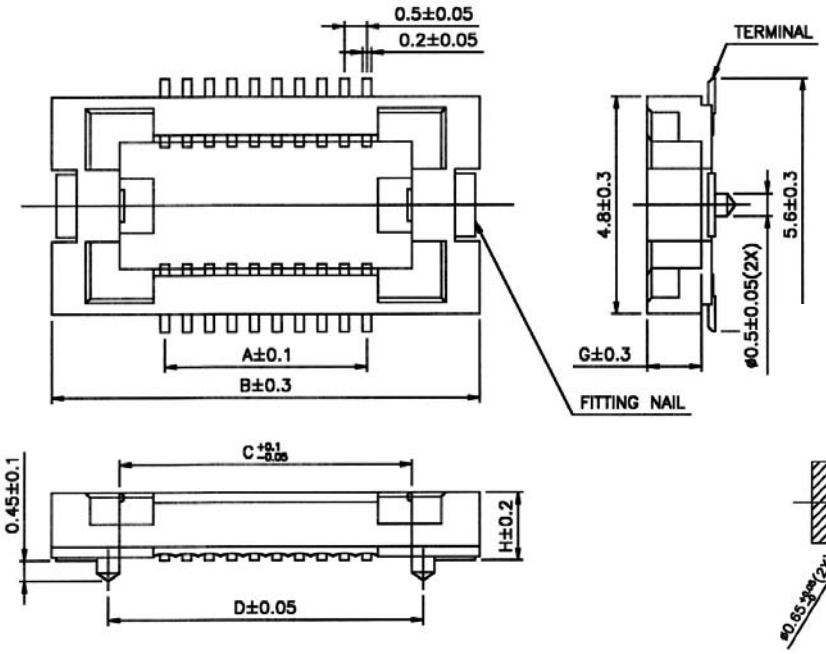

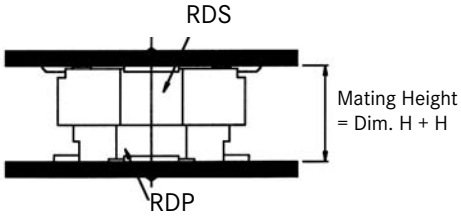

RECOMMENDED PCB LAYOUT

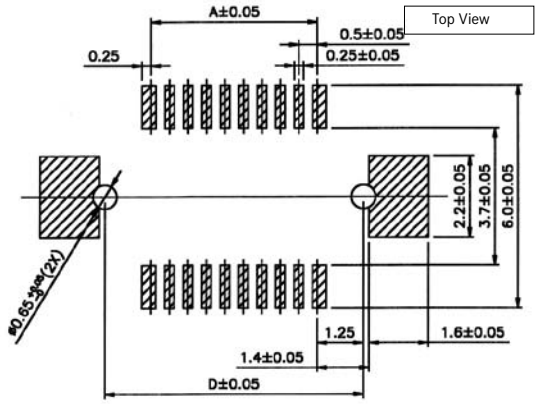

Part Number	Pin Count	A	B	C	D
RDS010-***-005-F*	10	2.0	7.0	4.0	4.5
RDS012-***-005-F*	12	2.5	7.5	4.5	5.0
RDS014-020-005-FF	14	3.0	8.0	5.0	5.5
RDS014-030-005-FL	14	3.0	8.0	5.0	5.5
RDS016-***-005-F*	16	3.5	8.5	5.5	6.0
RDS018-020-005-FF	18	4.0	9.0	6.0	6.5
RDS020-***-005-F*	20	4.5	9.5	6.5	7.0
RDS022-020-005-FF	22	5.0	10.0	7.0	7.5
RDS022-030-005-FL	22	5.0	10.0	7.0	7.5
RDS024-***-005-F*	24	5.5	10.5	7.5	8.0
RDS026-***-005-F*	26	6.0	11.0	8.0	8.5
RDS028-020-005-FF	28	6.5	11.5	8.5	9.0
RDS028-030-005-FL	28	6.5	11.5	8.5	9.0

Part Number	Pin Count	A	B	C	D
RDS030-***-005-F*	30	7.0	12.0	9.0	9.5
RDS032-020-005-FF	32	7.5	12.5	9.5	10.0
RDS034-030-005-FL	34	8.0	13.0	10.0	10.5
RDS034-040-005-FL	34	8.0	13.0	10.0	10.5
RDS036-***-005-F*	36	8.5	13.5	10.5	11.0
RDS038-030-005-FL	38	9.0	14.0	11.0	11.5
RDS040-***-005-F*	40	9.5	14.5	11.5	12.0
RDS044-030-005-FL	44	10.5	15.5	12.5	13.0
RDS050-***-005-F*	50	12.0	17.0	14.0	14.5
RDS054-030-005-FL	54	12.5	18.0	15.0	15.5
RDS060-***-005-F*	60	14.5	19.5	16.5	17.0
RDS068-***-005-F*	68	16.5	21.5	18.5	19.0

SPECIFICATIONS

Insulation Resistance:	100MΩ min.
Voltage Rating:	50V AC
Withstanding Voltage:	200V ACrms
Current Rating:	0.5A
Contact Resistance:	50mΩ max. initial
Operating Temp. Range:	-40°C to +80°C
Mating Force:	90g max. / contact
Unmating Force:	10g min. / contact
Mating Cycles:	50 insertions
Soldering Temp.:	230° C min. / 60 sec., 260°C peak

MATERIALS AND FINISH

Housing:	High Temperature Thermoplastic, UL 94V-0 rated
Contacts:	Copper Alloy (t=0.2mm)
	Mating Area - Au Flash
	Solder Area - Au Flash or Sn
Fitting Nail:	Copper Alloy (t=0.2mm), lead free solder

FEATURES

- Pin counts from 10 to 80
- Various mating heights

PART NUMBER

RDP 60 - 0** - 005 F *

Series

Pin Count

Height Coding *see drawing

Code	Dim H*	Dim J*
005	0.5mm	2.0mm
010	1.0mm	3.0mm
015	1.5mm	3.5mm

180° SMT

F = Au Flash (Mating Area)

Solder Area:
F = Au Flash (Dim H = 2.0mm only)
L = Sn (Dim H = 3.0 and 4.0mm only)

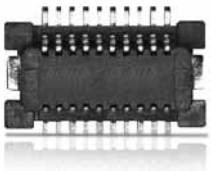

OUTLINE DIMENSIONS

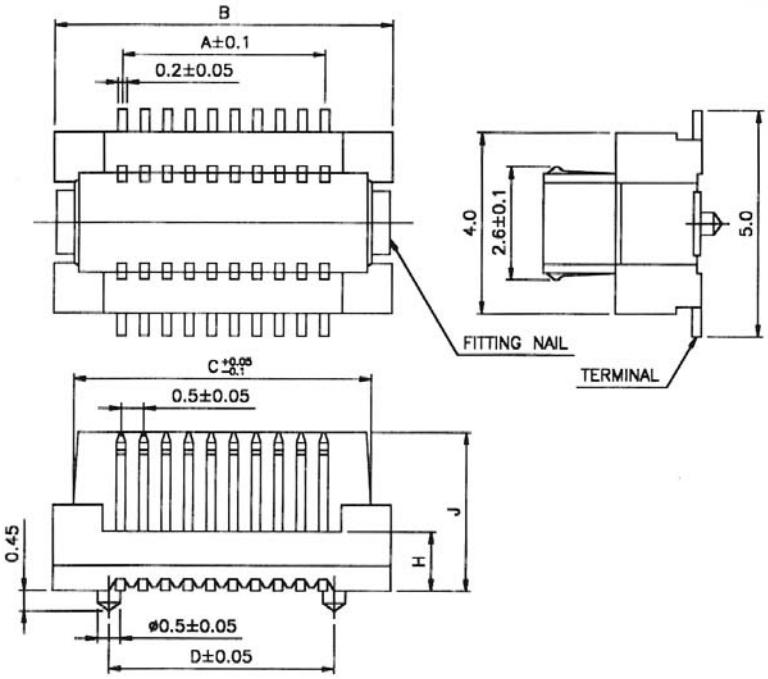

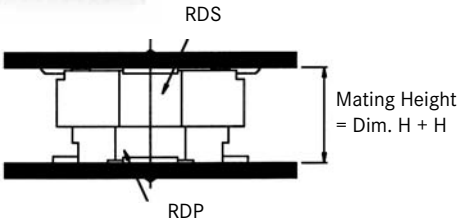

RECOMMENDED PCB LAYOUT

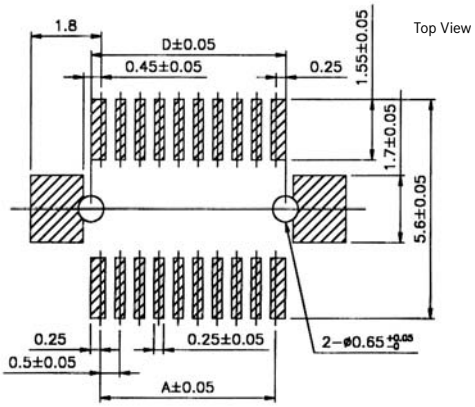

Part Number	Pin Count	A	B	C	D
RDP010-***-005-F*	10	2.0	5.0	4.0	2.5
RDP012-***-005-F*	12	2.5	5.5	4.5	3.0
RDP014-***-005-F*	14	3.0	6.0	5.0	3.5
RDP016-***-005-F*	16	3.5	6.5	5.5	4.0
RDP018-***-005-F*	18	4.0	7.0	6.0	4.5
RDP020-***-005-F*	20	4.5	7.5	6.5	5.0
RDP022-005-005-FF	22	5.0	8.0	7.0	5.5
RDP022-010-005-FL	22	5.0	8.0	7.0	5.5
RDP024-***-005-F*	24	5.5	8.5	7.5	6.0
RDP026-010-005-FL	26	6.0	9.0	8.0	6.5
RDP028-***-005-F*	28	6.5	9.5	8.5	7.0
RDP030-***-005-F*	30	7.0	10.0	9.0	7.5
RDP032-005-005-FF	32	7.5	10.5	9.5	8.0
RDP032-015-005-FL	32	7.5	10.5	9.5	8.0

Part Number	Pin Count	A	B	C	D
RDP034-010-005-FL	34	8.0	11.0	10.0	8.5
RDP034-015-005-FL	34	8.0	11.0	10.0	8.5
RDP036-***-005-F*	36	8.5	11.5	10.5	9.0
RDP038-010-005-FL	38	9.0	12.0	11.0	9.5
RDP038-015-005-FL	38	9.0	12.0	11.0	9.5
RDP040-***-005-F*	40	9.5	12.5	11.5	10.0
RDP044-***-005-F*	44	10.5	13.5	12.5	11.0
RDP046-010-005-FL	46	11.0	14.0	13.0	11.5
RDP050-***-005-F*	50	12.0	15.0	14.0	12.5
RDP054-010-005-FL	54	12.5	16.0	15.0	13.5
RDP060-***-005-F*	60	14.5	17.5	16.5	15.0
RDP068-010-005-FL	68	16.5	19.5	18.5	17.0
RDP068-015-005-FL	68	16.5	19.5	18.5	17.0
RDP032-015-005-FL	32	7.5	10.5	9.5	8.0

Trading Division

SPECIFICATIONS

Insulation Resistance:	1,000MΩ min.
Withstanding Voltage:	1,500V ACrms for 1 minute
Contact Resistance:	10mΩ
Voltage Rating:	250V AC/DC
Current Rating:	5A AC/DC
Operating Temp. Range:	-40°C to +105°C

MATERIALS AND FINISH

Insulator:	High Temp. LCP, UL94V-0 rated
Contact:	Brass
Plating:	Tin or Gold

FEATURES

- For wire-to-wire and wire-to-board applications
- Fully insulated terminals
- Low engagement terminals
- Locking function

PART NUMBER

P3BP - 12 S - T* - LL - T

- Series
- Pin Count
- S = Single Row: # of contacts (2 to 12)
- T1 = 180° TH T9 = 90° TH
- Mating / Termination Area: LL = Tin / Tin
- T = Tube Packaging

OUTLINE DIMENSIONS 90° SINGLE ROW

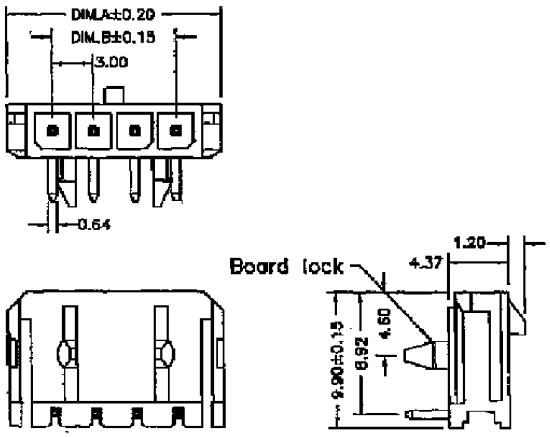

PCB LAYOUT

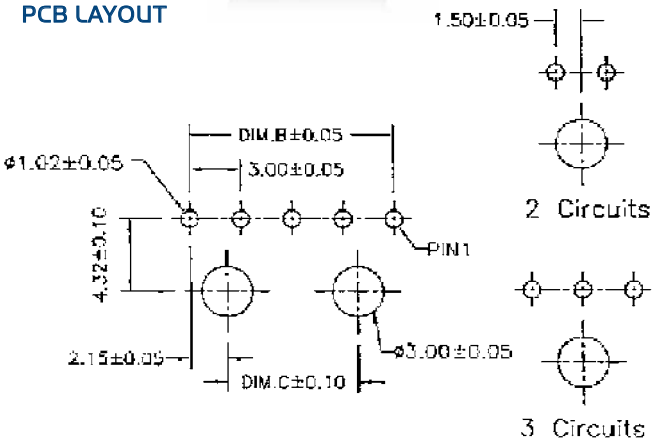

OUTLINE DIMENSIONS 180° SINGLE ROW

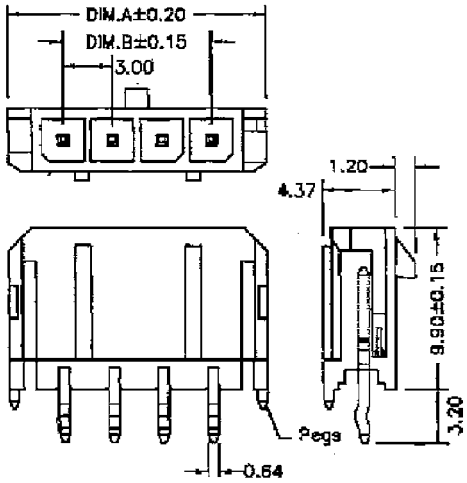

PCB LAYOUT

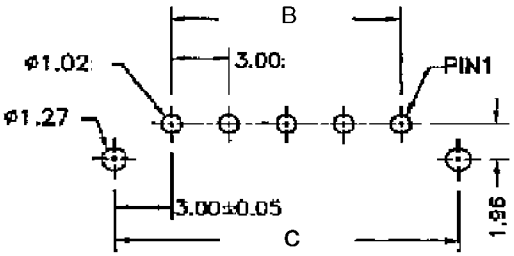

Part Number	Pin Count	A	B	C
P3BP-2S-T*-LL-T	2	9.65	3.00	-
P3BP-3S-T*-LL-T	3	12.65	6.00	-
P3BP-4S-T*-LL-T	4	15.65	9.00	4.70
P3BP-5S-T*-LL-T	5	18.65	12.00	7.70
P3BP-6S-T*-LL-T	6	21.65	15.00	10.70
P3BP-7S-T*-LL-T	7	24.65	18.00	13.70

Part Number	Pin Count	A	B	C
P3BP-8S-T*-LL-T	8	27.65	21.00	27.00
P3BP-9S-T*-LL-T	9	30.65	24.00	19.70
P3BP-10S-T*-LL-T	10	33.65	27.00	22.70
P3BP-11S-T*-LL-T	11	36.65	30.00	27.70
P3BP-12S-T*-LL-T	12	39.65	33.00	28.70

SPECIFICATIONS

Insulation Resistance:	1,000MΩ min.
Withstanding Voltage:	1,500V ACrms for 1 minute
Contact Resistance:	10mΩ
Voltage Rating:	250V AC/DC
Current Rating:	5A AC/DC
Operating Temp. Range:	-40°C to +105°C

MATERIALS AND FINISH

Insulator:	High Temp. LCP UL94V-0
Contact:	Brass,
Plating:	Tin or Gold

PART NUMBER

P3BP - 24 D - T* - LL - T

- Series
- Pin Count
- D = Dual Row: # of contacts (2 to 24)
- T1 = 180° TH T9 = 90° TH
- Mating / Termination Area: LL = Tin / Tin
- T = Tube Packaging

FEATURES

- For wire-to-wire and wire-to-board applications
- Fully insulated terminals
- Low engagement terminals
- Locking function

OUTLINE DIMENSIONS 90° DUAL ROW

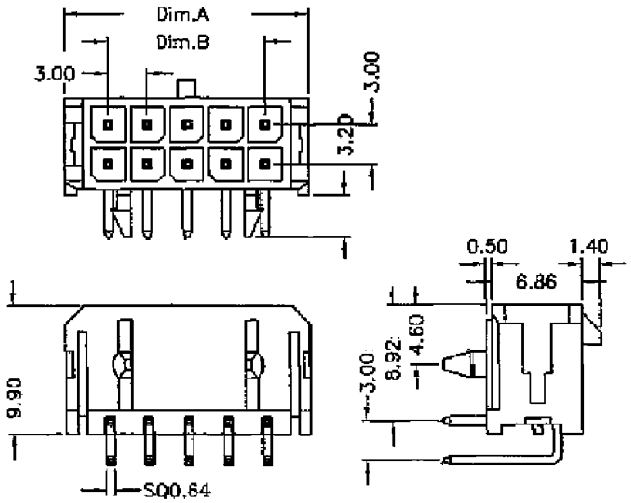

PCB LAYOUT

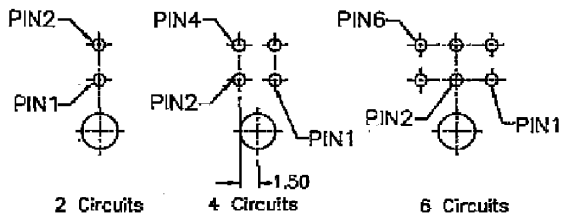

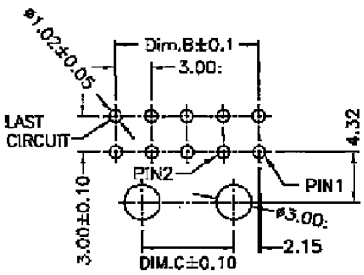

OUTLINE DIMENSIONS 180° DUAL ROW

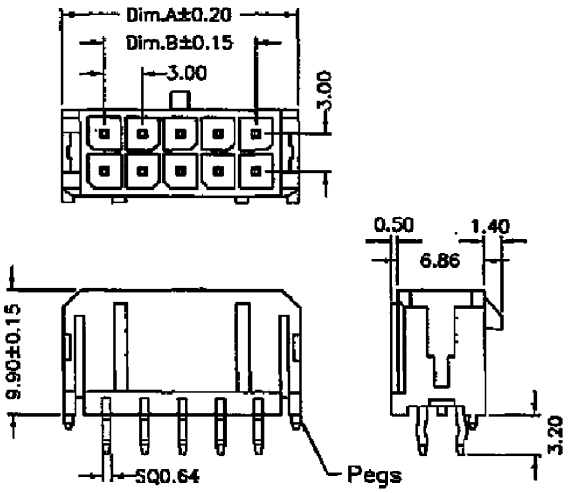

PCB LAYOUT

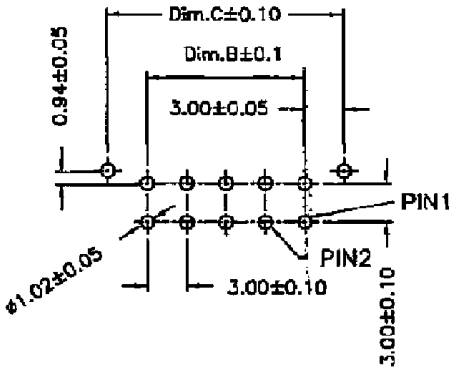

Part Number	Pin Count	A	B	C
P3BP-2D-T*-LL-T	2	6.65	3.00	-
P3BP-4D-T*-LL-T	4	9.65	6.00	-
P3BP-6D-T*-LL-T	6	12.65	9.00	-
P3BP-8D-T*-LL-T	8	15.65	12.00	4.70
P3BP-10D-T*-LL-T	10	18.65	15.00	7.70
P3BP-212D-T*-LL-T	12	21.65	18.00	10.70

Part Number	Pin Count	A	B	C
P3BP-14D-T*-LL-T	14	24.65	18.00	13.70
P3BP-16D-T*-LL-T	16	27.65	21.00	16.70
P3BP-18D-T*-LL-T	18	30.65	24.00	19.70
P3BP-20D-T*-LL-T	20	33.65	27.00	22.70
P3BP-22D-T*-LL-T	22	36.65	30.00	25.70
P3BP-24D-T*-LL-T	24	39.65	33.00	28.70

SPECIFICATIONS

Insulation Resistance:	1,000MΩ min.
Withstanding Voltage:	1,500V ACrms for 1 minute
Contact Resistance:	10mΩ
Voltage Rating:	250V AC/DC
Current Rating:	5A AC/DC
Operating Temp. Range:	-40°C to +105°C

MATERIALS AND FINISH

Insulator:	High Temp. LCP, UL94V-0
Contact:	Brass
Plating:	Tin or Select Gold

FEATURES

- For wire-to-wire and wire-to-board applications
- Fully insulated terminals
- Low engagement terminals
- Locking function

PART NUMBER

P3BP - 24 * - S1 - LL - T

- Series
- Pin Count
- S = Single Row: (2 to 12)
  D = Dual Row: (2 to 24)
- S1 = 180° SMT
- Mating / Termination Area:
  LL = Tin / Tin
- T = Tube Packaging

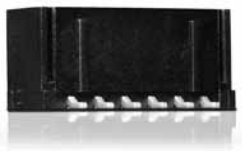

OUTLINE DIMENSIONS 90° DUAL ROW

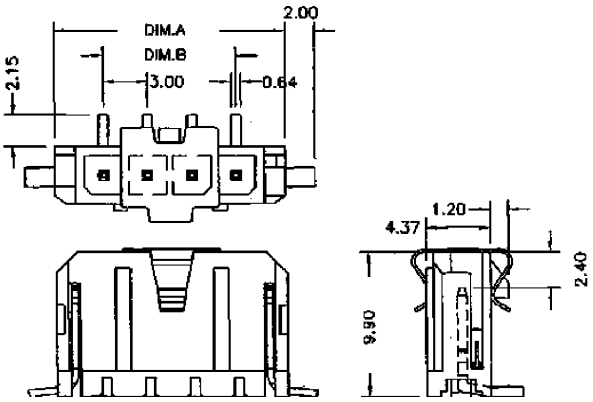

PCB LAYOUT

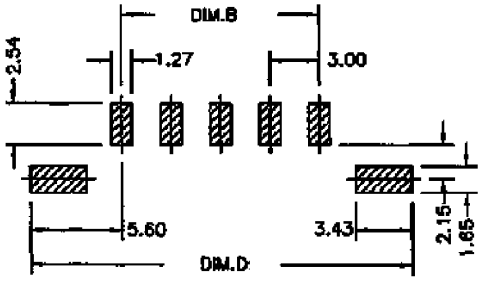

OUTLINE DIMENSIONS 180° DUAL ROW

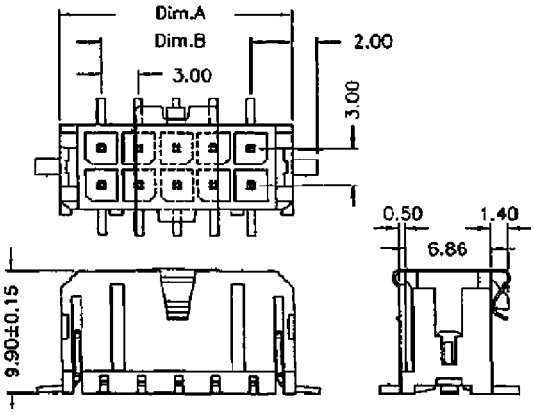

PCB LAYOUT

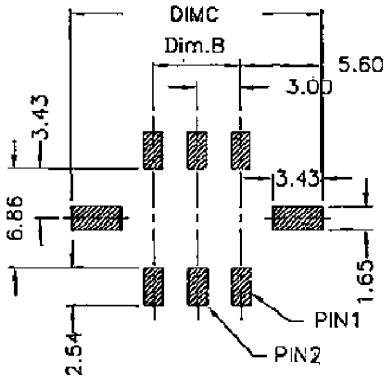

Single Row

Part Number	Pin Count	A	B	D
P3BP-2S-S1-LL-T	2	9.65	3.00	14.20
P3BP-3S-S1-LL-T	3	12.65	6.00	17.20
P3BP-4S-S1-LL-T	4	15.65	9.00	20.20
P3BP-5S-S1-LL-T	5	18.65	12.00	23.20
P3BP-6S-S1-LL-T	6	21.65	15.00	26.20
P3BP-7S-S1-LL-T	7	24.65	18.00	29.20
P3BP-8S-S1-LL-T	8	27.65	21.00	32.20
P3BP-9S-S1-LL-T	9	30.65	24.00	35.20
P3BP-10S-S1-LL-T	10	33.65	27.00	38.20
P3BP-11S-S1-LL-T	11	36.65	30.00	41.20
P3BP-12S-S1-LL-T	12	39.65	33.00	44.20

Dual Row

Part Number	Pin Count	A	B	C
P3BP-2D-S1-LL-T	2	6.65	-	11.20
P3BP-4D-S1-LL-T	4	9.65	3.00	14.20
P3BP-6D-S1-LL-T	6	12.65	6.00	17.20
P3BP-8D-S1-LL-T	8	15.65	9.00	20.20
P3BP-10D-S1-LL-T	10	18.65	12.00	23.20
P3BP-12D-S1-LL-T	12	21.65	15.00	26.20
P3BP-14D-S1-LL-T	14	24.65	18.00	29.20
P3BP-16D-S1-LL-T	16	27.65	21.00	32.20
P3BP-18D-S1-LL-T	18	30.65	24.00	35.20
P3BP-20D-S1-LL-T	20	33.65	27.00	38.20
P3BP-22D-S1-LL-T	22	36.65	30.00	41.20
P3BP-24D-S1-LL-T	24	39.65	33.00	44.20

SPECIFICATIONS

Insulation Resistance:	1,000MΩ min.
Withstanding Voltage:	1,500V ACrms for 1 minute
Contact Resistance:	10mΩ
Voltage Rating:	250V AC/DC
Current Rating:	5A AC/DC
Operating Temp. Range:	-40°C to +105°C

MATERIALS AND FINISH

Insulator:	High Temp. LCP, UL94V-0
Contact:	Brass
Plating:	Tin or Select Gold

FEATURES

- For wire-to-wire and wire-to-board applications
- Fully insulated terminals
- Low engagement terminals
- Locking function

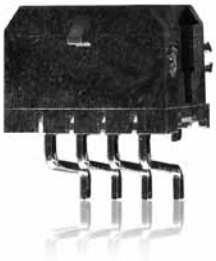

PART NUMBER

P3BP - 24 * - S9 - LL - T

- Series
- Pin Count
- S = Single Row: (2 to 12)
  D = Dual Row: (2 to 24)
- S9 = 90° SMT
- Mating / Termination Area:
  LL = Tin / Tin
- T = Tube Packaging

OUTLINE DIMENSIONS 90° SINGLE ROW

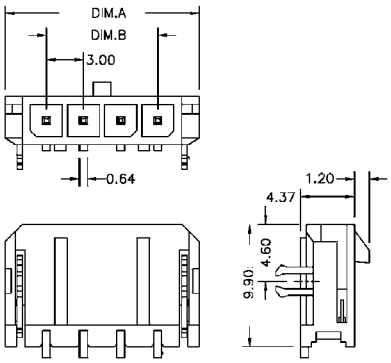

PCB LAYOUT

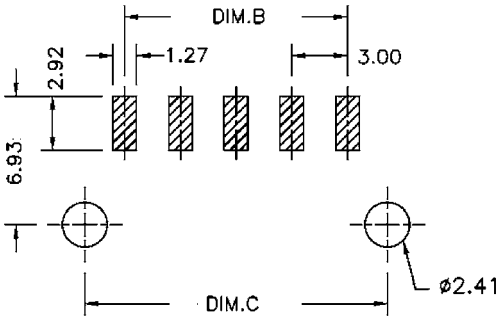

OUTLINE DIMENSIONS 90° DUAL ROW

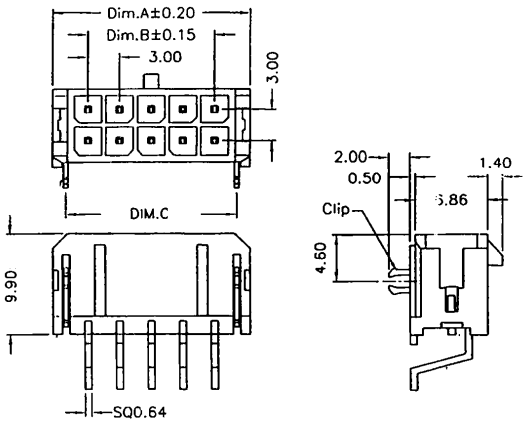

PCB LAYOUT

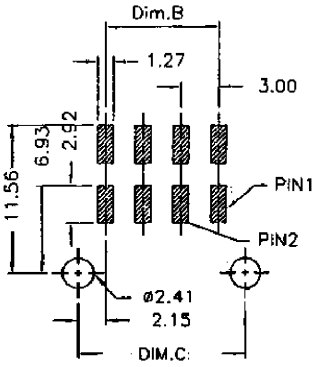

Single Row

Part Number	Pin Count	A	B	D
P3BP-2S-S9-LL-T	2	9.65	3.00	7.30
P3BP-3S-S9-LL-T	3	12.65	6.00	10.30
P3BP-4S-S9-LL-T	4	15.65	9.00	13.30
P3BP-5S-S9-LL-T	5	18.65	12.00	16.30
P3BP-6S-S9-LL-T	6	21.65	15.00	19.30
P3BP-7S-S9-LL-T	7	24.65	18.00	22.30
P3BP-8S-S9-LL-T	8	27.65	21.00	25.30
P3BP-9S-S9-LL-T	9	30.65	24.00	28.30
P3BP-10S-S9-LL-T	10	33.65	27.00	31.30
P3BP-11S-S9-LL-T	11	36.65	30.00	34.30
P3BP-12S-S9-LL-T	12	39.65	33.00	37.30

Dual Row

Part Number	Pin Count	A	B	C
P3BP-2D-S9-LL-T	2	6.65	-	4.30
P3BP-4D-S9-LL-T	4	9.65	6.00	7.30
P3BP-6D-S9-LL-T	6	12.65	9.00	10.30
P3BP-8D-S9-LL-T	8	15.65	12.00	13.30
P3BP-10D-S9-LL-T	10	18.65	15.00	16.30
P3BP-12D-S9-LL-T	10	21.65	18.00	19.30
P3BP-14D-S9-LL-T	14	24.65	18.00	22.30
P3BP-16D-S9-LL-T	16	27.65	21.00	25.30
P3BP-18D-S9-LL-T	18	30.65	24.00	28.30
P3BP-20D-S9-LL-T	20	33.65	27.00	31.30
P3BP-22D-S9-LL-T	22	36.65	30.00	34.30
P3BP-24D-S9-LL-T	24	39.65	33.00	37.30

SPECIFICATIONS

Insulation Resistance:	1,000MΩ min.
Withstanding Voltage:	1,500V ACrms for 1 minute
Contact Resistance:	20mΩ (single row) 10mΩ (dual row)
Voltage Rating:	250V AC/DC
Current Rating:	5A AC/DC
Operating Temp. Range:	-25°C to +105°C

MATERIALS AND FINISH

Insulator:	Nylon66, UL94V-0 rated
Contact:	Phosphor Bronze, Tin Plated
Crimp Terminal:	Phosphor Bronze, Tin Plated

FEATURES

- For wire-to-wire and wire-to-board applications
- Fully insulated terminals
- Low engagement terminals
- Locking function

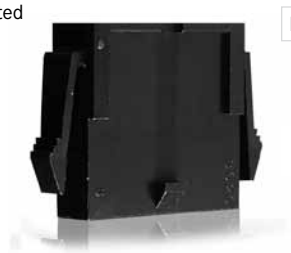

PART NUMBER

P3CP - 12 * - C1 - LL - B

- Series
- Pin Count
- S = Single Row: (2 to 12)
  D = Dual Row: (2 to 24)
- C1 = 180° Crimp
- Mating / Termination Area:
  LL = Tin / Tin
- B = Bulk Packaging

PART NUMBER (CRIMP CONTACTS)

P3CP-Contact (wire gauge = AWG 20-24)

OUTLINE DIMENSIONS 180° SINGLE ROW

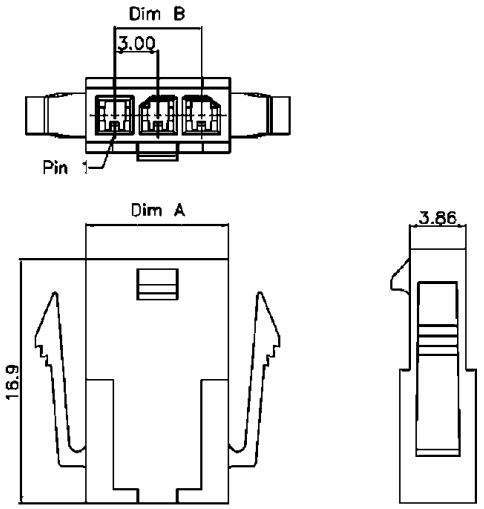

OUTLINE DIMENSIONS 180° DUAL ROW

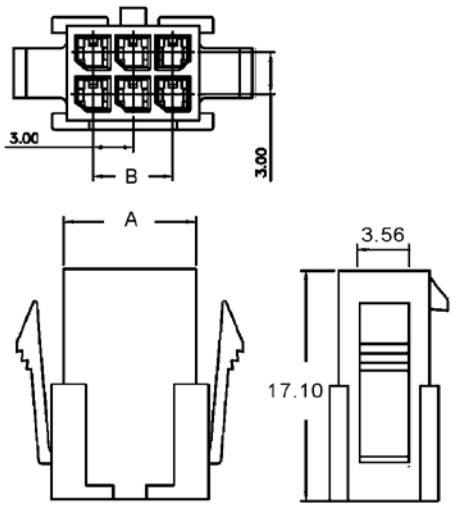

OUTLINE DIMENSIONS CRIMP CONTACTS

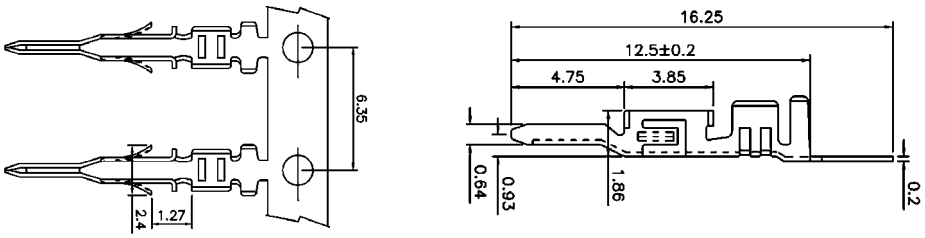

Single Row

Part Number	Pin Count	A	B
P3CP-2S-C1-LL-B	2	6.85	3.00
P3CP-3S-C1-LL-B	3	9.85	6.00
P3CP-4S-C1-LL-B	4	12.85	9.00
P3CP-5S-C1-LL-B	5	15.85	12.00
P3CP-6S-C1-LL-B	6	18.85	15.00
P3CP-7S-C1-LL-B	7	21.85	18.00
P3CP-8S-C1-LL-B	8	24.85	21.00
P3CP-9S-C1-LL-B	9	27.85	24.00
P3CP-10S-C1-LL-B	10	30.85	27.00
P3CP-11S-C1-LL-B	11	33.85	30.00
P3CP-12S-C1-LL-B	12	36.85	33.00

Dual Row

Part Number	Pin Count	A	B
P3CP-2D-C1-LL-B	2	3.85	-
P3CP-4D-C1-LL-B	4	6.85	3.00
P3CP-6D-C1-LL-B	6	9.85	6.00
P3CP-8D-C1-LL-B	8	12.85	9.00
P3CP-10D-C1-LL-B	10	15.85	12.00
P3CP-12D-C1-LL-B	12	18.85	15.00
P3CP-14D-C1-LL-B	14	21.85	18.00
P3CP-16D-C1-LL-B	16	24.85	21.00
P3CP-18D-C1-LL-B	18	27.85	24.00
P3CP-20D-C1-LL-B	20	30.85	27.00
P3CP-22D-C1-LL-B	22	33.85	30.00
P3CP-24D-C1-LL-B	24	36.85	33.00

SPECIFICATIONS

Insulation Resistance:	1,000MΩ min.
Withstanding Voltage:	1,500V ACrms for 1 minute
Contact Resistance:	20mΩ (single row)
	10mΩ (dual row)
Voltage Rating:	250V AC/DC
Current Rating:	5A AC/DC
Operating Temp. Range:	-25°C to +105°C

MATERIALS AND FINISH

Insulator:	Nylon66, UL94V-0 rated
Contact:	Single (Brass, Tin Plated)
	Dual (Phosphor Bronze, Tin Plated)
Crimp Terminal:	Phosphor Bronze, Tin Plated

FEATURES

- For wire-to-wire and wire-to-board applications
- Fully insulated terminals
- Low engagement terminals
- Locking function

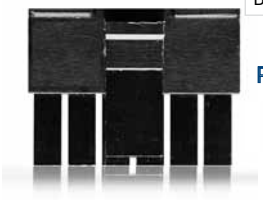

PART NUMBER

P3CS - 12 * - C1 - LL - B

- Series
- Pin Count
- S = Single Row: (2 to 12)
  D = Dual Row: (2 to 24)
- C1 = 180° Crimp
- Mating / Termination Area:
  LL = Tin / Tin
- B = Bulk Packaging

PART NUMBER (CRIMP CONTACTS)

P3CS-Contact (wire gauge = AWG 20-24)

OUTLINE DIMENSIONS 180° SINGLE ROW

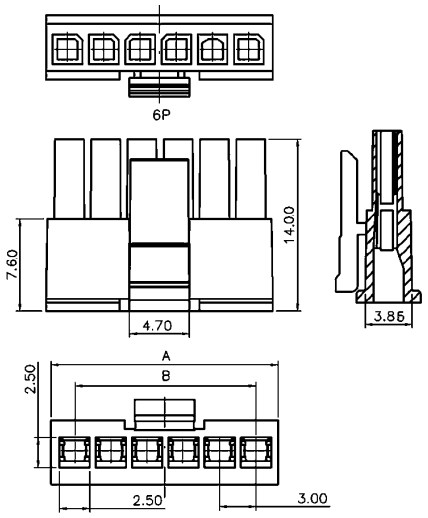

OUTLINE DIMENSIONS 180° DUAL ROW

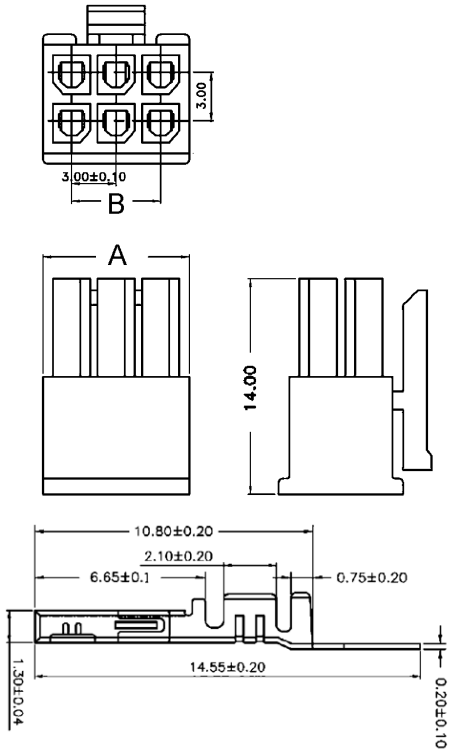

OUTLINE DIMENSIONS CRIMP CONTACTS

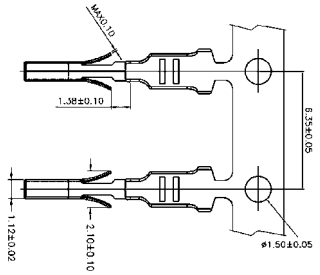

Single Row

Part Number	Pin Count	A	B
P3CS-2S-C1-LL-B	2	6.85	3.00
P3CS-3S-C1-LL-B	3	9.85	6.00
P3CS-4S-C1-LL-B	4	12.85	9.00
P3CS-5S-C1-LL-B	5	15.85	12.00
P3CS-6S-C1-LL-B	6	18.85	15.00
P3CS-7S-C1-LL-B	7	21.85	18.00
P3CS-8S-C1-LL-B	8	24.85	21.00
P3CS-9S-C1-LL-B	9	27.85	24.00
P3CS-10S-C1-LL-B	10	30.85	27.00
P3CS-11S-C1-LL-B	11	33.85	30.00
P3CS-12S-C1-LL-B	12	36.85	33.00

Dual Row

Part Number	Pin Count	A	B
P3CS-2D-C1-LL-B	2	6.85	-
P3CS-4D-C1-LL-B	4	9.85	3.00
P3CS-6D-C1-LL-B	6	12.85	6.00
P3CS-8D-C1-LL-B	8	15.85	9.00
P3CS-10D-C1-LL-B	10	18.85	12.00
P3CS-12D-C1-LL-B	12	21.85	15.00
P3CS-14D-C1-LL-B	14	24.85	18.00
P3CS-16D-C1-LL-B	16	27.85	21.00
P3CS-18D-C1-LL-B	18	30.85	24.00
P3CS-20D-C1-LL-B	20	33.85	27.00
P3CS-22D-C1-LL-B	22	36.85	30.00
P3CS-24D-C1-LL-B	24	39.83	33.00

SPECIFICATIONS

Insulation Resistance:	1,000MΩ min.
Withstanding Voltage:	1,500V ACrms for 1 minute
Contact Resistance:	20mΩ max.
Voltage Rating:	250V AC/DC
Current Rating:	7A AC/DC
Operating Temp. Range:	-40°C to +105°C

MATERIALS AND FINISH

Insulator:	Nylon66, UL94V-2 rated
Contact:	Brass, Tin Plated

FEATURES

- Designed for high current/high density applications
- For wire-to-wire and wire-to-board applications
- Fully insulated terminals
- Low engagement terminals
- Locking function

PART NUMBER

P4BP - 4 - T* - LL - B

- Series
- Pin Count (2 to24)
- T1 = 180° T9 = 90°
- Mating / Termination Area LL = Tin / Tin
- B = Bulk Packaging (1,000 pcs per bag)

OUTLINE DIMENSIONS 90° DUAL ROW

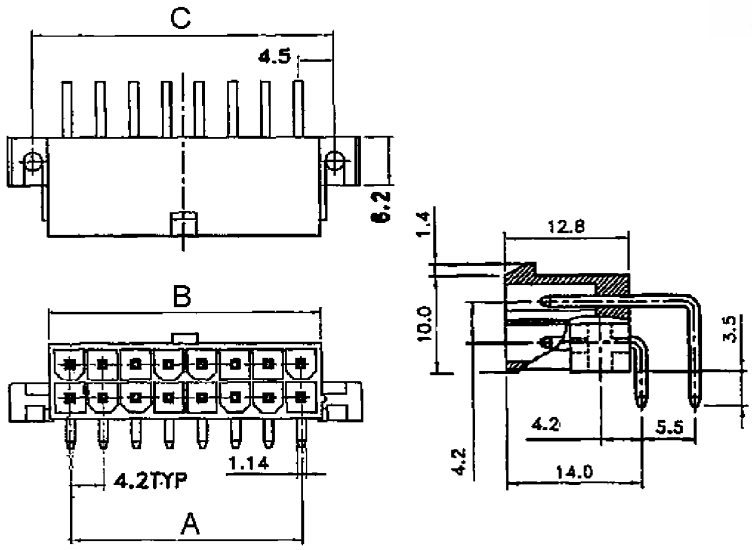

PCB LAYOUT

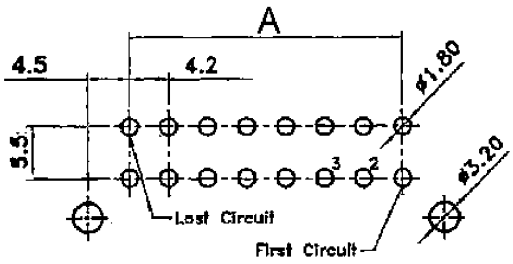

OUTLINE DIMENSIONS 180° DUAL ROW

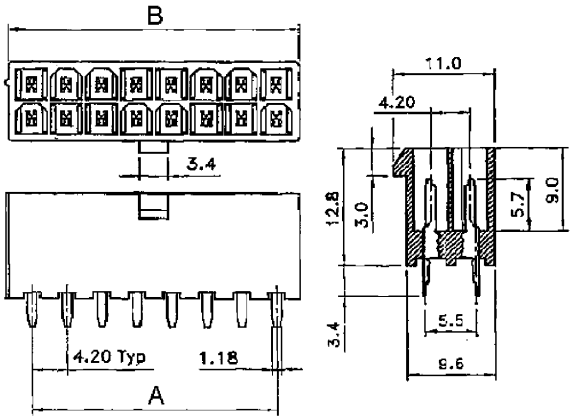

PCB LAYOUT

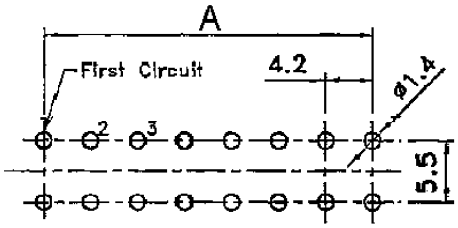

Part Number	Pin Count	A	B	C
P4BP-2-T*-LL-B	2	-	5.60	9.00
P4BP-4-T*-LL-B	4	4.20	9.80	13.20
P4BP-6-T*-LL-B	6	8.40	14.00	17.40
P4BP-8-T*-LL-B	8	12.60	18.20	21.60
P4BP-10-T*-LL-B	10	16.80	22.40	25.80
P4BP-12-T*-LL-B	12	21.00	26.60	30.00

Part Number	Pin Count	A	B	C
P4BP-14-T*-LL-B	14	25.20	30.80	34.20
P4BP-16-T*-LL-B	16	29.40	35.00	38.40
P4BP-18-T*-LL-B	18	33.60	39.20	42.60
P4BP-20-T*-LL-B	20	37.80	43.40	46.80
P4BP-22-T*-LL-B	22	42.00	47.60	51.00
P4BP-24-T*-LL-B	24	46.20	51.80	55.20

SPECIFICATIONS

Insulation Resistance:	1,000MΩ min.
Withstanding Voltage:	1,500V ACrms for 1 minute
Contact Resistance:	20mΩ max.
Voltage Rating:	Single = 600V AC/DC Dual = 250V AC/DC
Current Rating:	Single = 9A AC/DC Dual = 7A AC/DC,
Operating Temp. Range:	-40°C to +105°C

MATERIALS AND FINISH

Insulator: Nylon66, UL94V-2 rated

FEATURES

- Designed for high current/high density applications
- For wire-to-wire and wire-to-board applications
- Fully insulated terminals
- Low engagement terminals
- Locking function
- Order Quantity 1,000 pcs. per bag

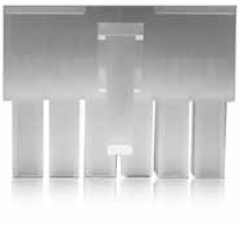

PART NUMBER

P4CP - 4 * - C1 - LL - B

- Series
- Pin Count
- S = Single Row: (2 to 6)
  D = Dual Row: (2 to 24)
- C1 = 180° Crimp
- Mating / Termination Area:
  LL = Tin / Tin
- B = Bulk Packaging

PART NUMBER (CRIMP CONTACTS)

P4CP-Contact -1

1 = AWG 24-26 Brass	2 = AWG16-22 Brass
3 = 24-26 Phosphor Bronze	4 = 18-22 Phosphor Bronze

OUTLINE DIMENSIONS SINGLE ROW

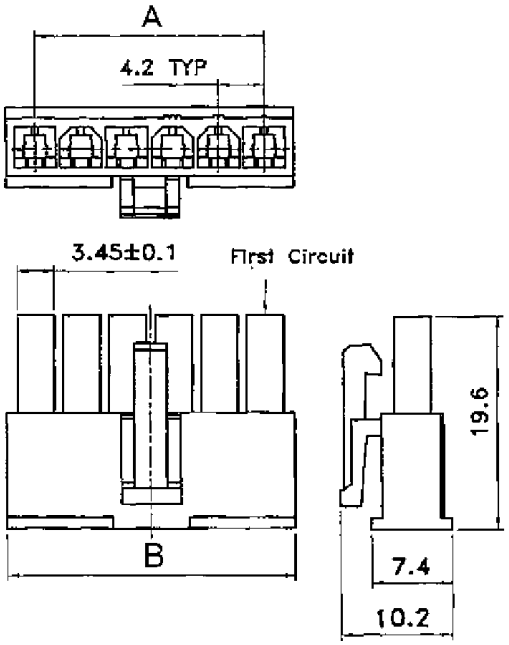

OUTLINE DIMENSIONS DUAL ROW

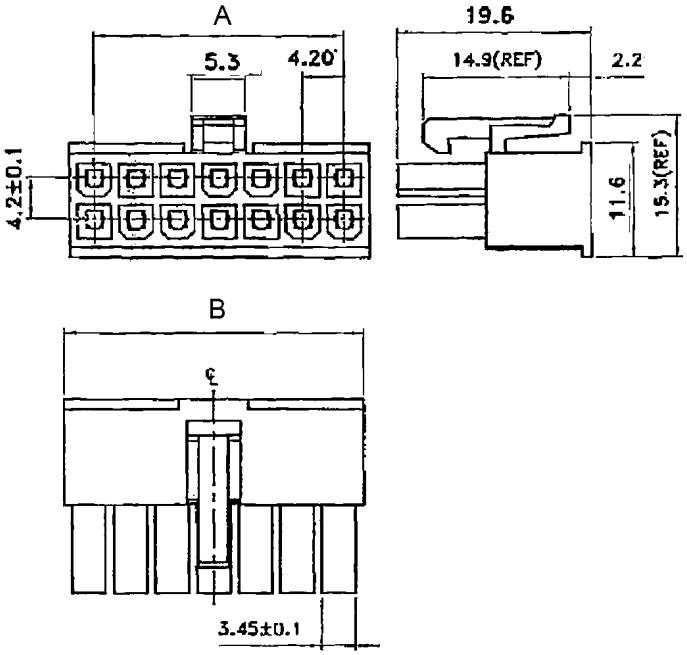

Single Row

Part Number	Pin Count	A	B
P4CP-2S-C1-LL-B	2	4.20	9.60
P4CP-3S-C1-LL-B	3	8.40	13.80
P4CP-4S-C1-LL-B	4	12.60	18.00
P4CP-5S-C1-LL-B	5	16.80	22.20
P4CP-6S-C1-LL-B	6	21.00	26.40

Dual Row

Part Number	Pin Count	A	B
P4CP-2D-C1-LL-B	2	-	5.40
P4CP-4D-C1-LL-B	4	4.20	9.60
P4CP-6D-C1-LL-B	6	8.40	13.80
P4CP-8D-C1-LL-B	8	12.60	18.00
P4CP-10D-C1-LL-B	10	16.80	22.20
P4CP-12D-C1-LL-B	12	21.00	26.40
P4CP-14-D-C1-LL-B	14	25.20	30.60
P4CP-16-D-C1-LL-B	16	29.40	34.80
P4CP-18-D-C1-LL-B	18	33.60	39.00
P4CP-20-D-C1-LL-B	20	37.80	43.20
P4CP-22-D-C1-LL-B	22	42.00	47.40
P4CP-24-D-C1-LL-B	24	46.20	51.60

Trading Division

SPECIFICATIONS

Insulation Resistance:	1,000MΩ min.
Withstanding Voltage:	1,500V ACrms for 1 minute
Contact Resistance:	20mΩ max.
Voltage Rating:	240V AC/DC
Current Rating:	7A AC/DC
Operating Temp. Range:	-40°C to +105°C

MATERIALS AND FINISH

Contact:	Brass
Crimp Terminals:	Brass, Tin Plated

PART NUMBER

P4CP-CONTACT - *

Series

Wire gauge
1 = AWG 22-26
2 = AWG18-24
3 = AWG16

OUTLINE DIMENSIONS CRIMP CONTACTS
(P4CP-Contact-1)

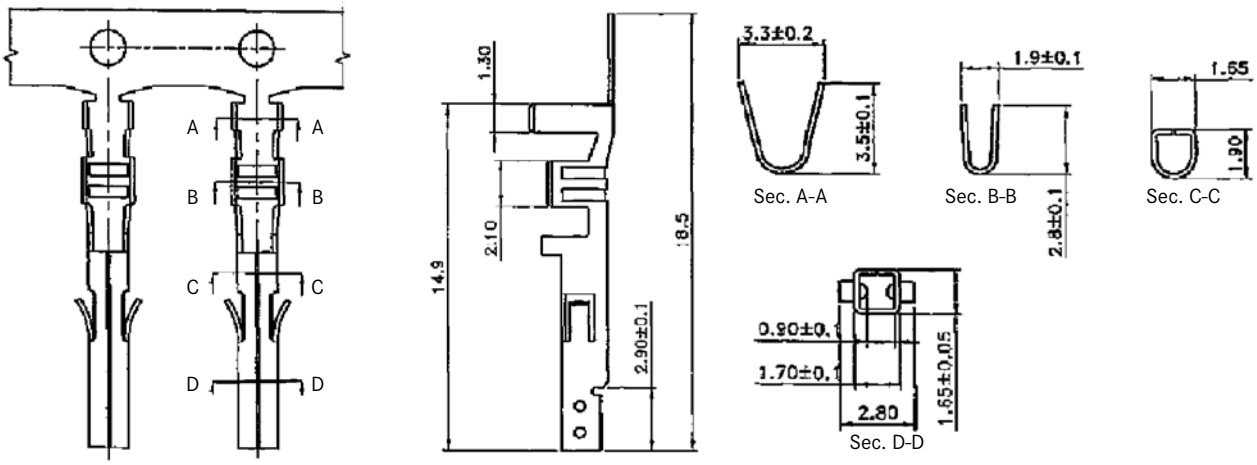

OUTLINE DIMENSIONS CRIMP CONTACTS
(P4CP-Contact-2)

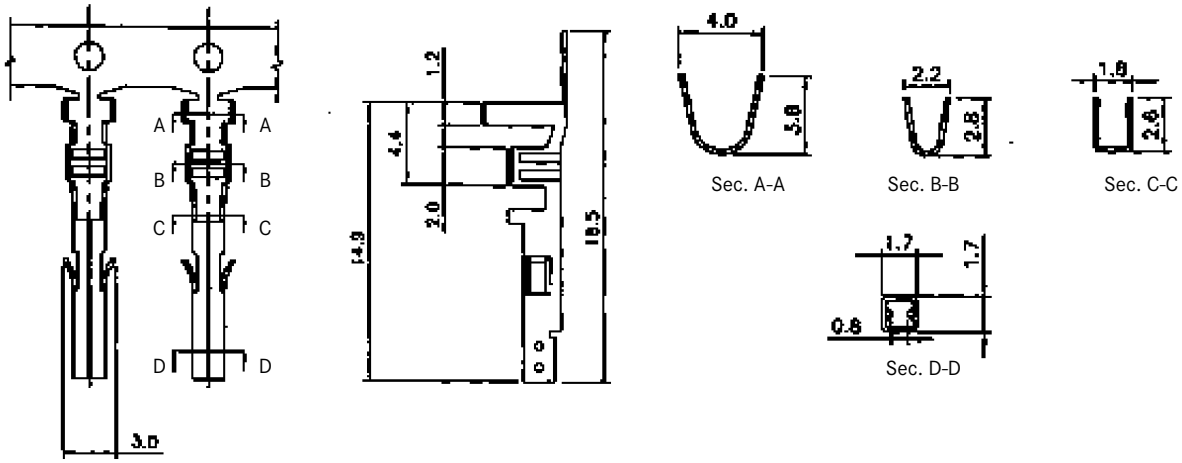

OUTLINE DIMENSIONS CRIMP CONTACTS
(P4CP-Contact-3)

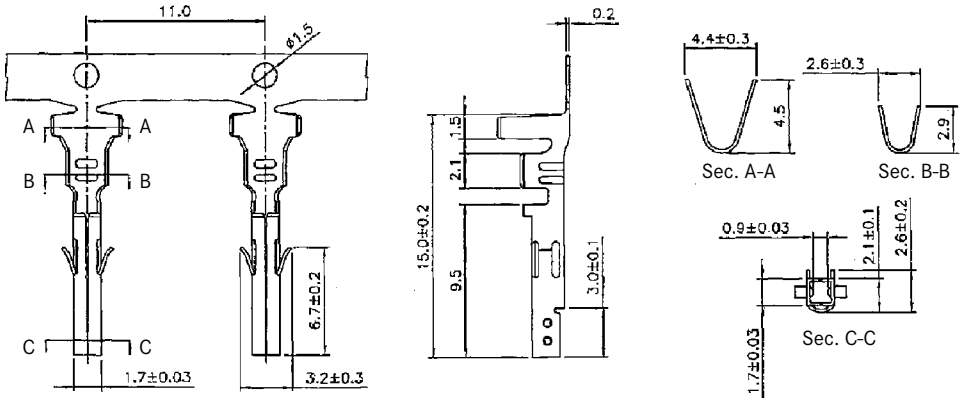

SPECIFICATIONS

Insulation Resistance:	1,000MΩ min.
Withstanding Voltage:	1,500V ACrms for 1 minute
Contact Resistance:	20mΩ max.
Voltage Rating:	Dual = 250V AC/DC, Single = 600V AC/DC
Current Rating:	Dual = 7A AC/DC, Single = 7A AC/DC
Operating Temp. Range:	-40°C to +105°C

MATERIALS AND FINISH

Insulator:	Nylon66, UL94V-2 rated
Contact:	Brass, Tin Plated
Crimp Terminals:	Brass, Tin Plated

FEATURES

- Designed for high current/ high density applications
- For wire-to-wire and wire-to-board applications
- Fully insulated terminals
- Low engagement terminals
- Locking function

PART NUMBER

P4CS - 4 * - C1 - LL - B

- Series
- Pin Count
- S = Single Row: (2 to 6)
  D = Dual Row: (2 to 24)
- C1 = 180° Crimp
- Mating / Termination Area:
  LL = Tin / Tin
- B = Bulk Packaging

OUTLINE DIMENSIONS SINGLE ROW

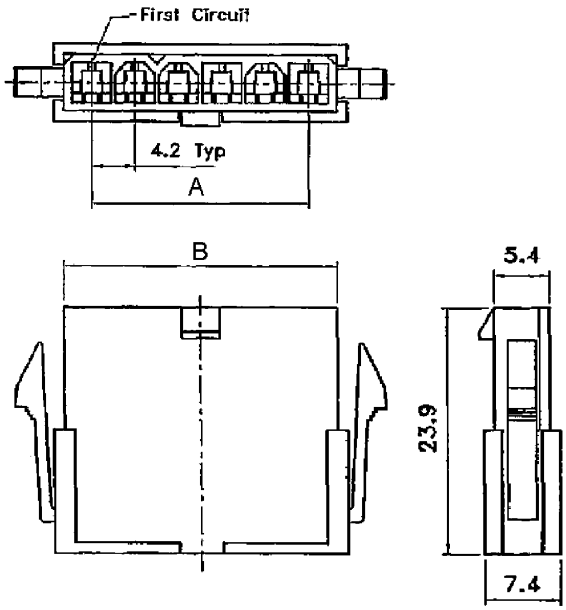

OUTLINE DIMENSIONS DUAL ROW

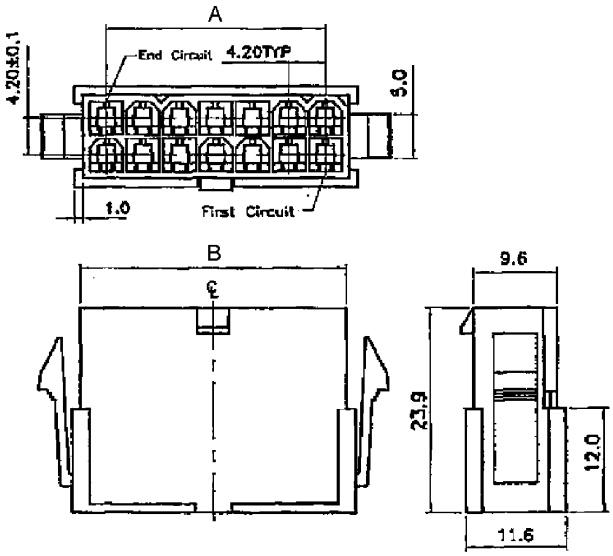

DUAL ROW PANEL CUT

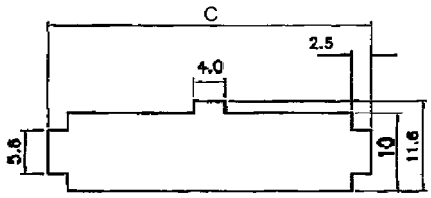

SINGLE ROW PANEL CUT

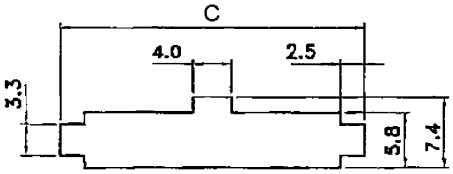

max. panel thickness 2.0mm

Single Row

Part Number	Pin Count	A	B	C
P4CS-2S-C1-LL-B	2	4.20	9.60	15.00
P4CS-3S-C1-LL-B	3	8.40	13.80	19.20
P4CS-4S-C1-LL-B	4	12.60	18.00	23.40
P4CS-5S-C1-LL-B	5	16.80	22.20	27.60
P4CS-6S-C1-LL-B	6	21.00	26.40	31.80

Dual Row

Part Number	Pin Count	A	B	C
P4CS-2D-C1-LL-B	2	-	5.50	10.80
P4CS-4D-C1-LL-B	4	4.20	9.70	15.00
P4CS-6D-C1-LL-B	6	8.40	14.20	19.20
P4CS-8D-C1-LL-B	8	12.60	18.40	23.40
P4CS-10D-C1-LL-B	10	16.80	22.60	27.60
P4CS-12D-C1-LL-B	12	21.00	26.80	31.80
P4CS-14D-C1-LL-B	14	25.20	31.00	36.00
P4CS-16D-C1-LL-B	16	29.40	35.20	40.20
P4CS-18D-C1-LL-B	18	33.60	39.40	44.40
P4CS-20D-C1-LL-B	20	37.80	43.60	48.60
P4CS-22D-C1-LL-B	22	42.00	47.80	52.80
P4CS-24D-C1-LL-B	24	46.20	52.00	57.00

SPECIFICATIONS

Insulation Resistance:	1,000MΩ min.
Withstanding Voltage:	1,500V ACrms for 1 minute
Contact Resistance:	20mΩ max.
Voltage Rating:	240V AC/DC
Current Rating:	7A AC/DC
Operating Temp. Range:	-40°C to +105°C

MATERIALS AND FINISH

Contact:	Brass
Crimp Terminals:	Brass, Tin Plated

PART NUMBER

P4CS-CONTACT - *

Series

Wire gauge
1 = AWG 22-26
2 = AWG18-24
3 = AWG16

OUTLINE DIMENSIONS CRIMP CONTACTS

(P4CS-Contact-1)

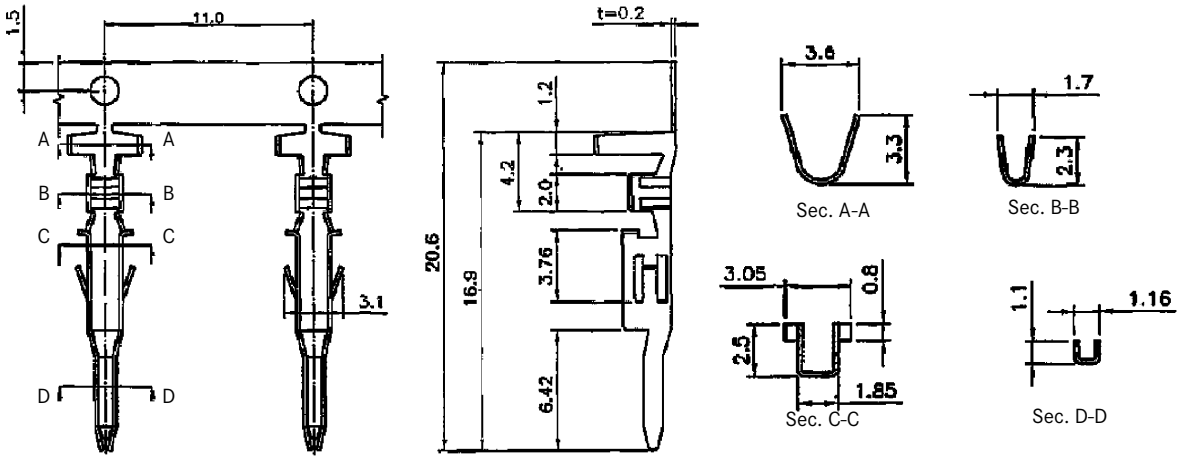

OUTLINE DIMENSIONS CRIMP CONTACTS

(P4CP-Contact-2)

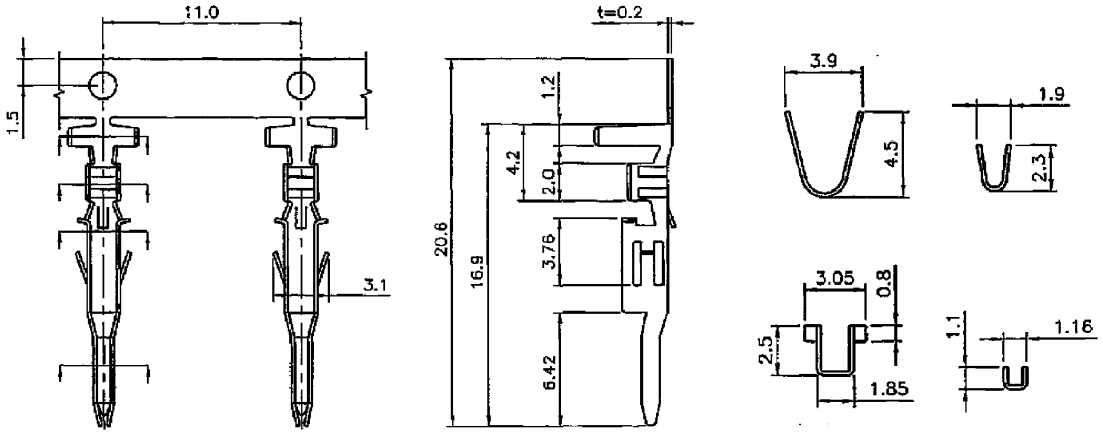

OUTLINE DIMENSIONS CRIMP CONTACTS

(P4CS-Contact-3)

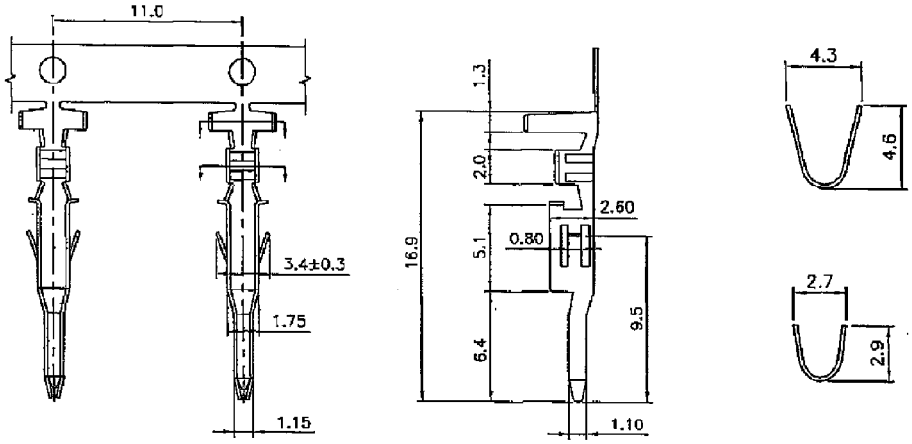

INPUT / OUTPUT CONNECTORS

USB, MINI-USB, MICRO-USB AND IEEE 194

HDMI 228

DVI 230

SAS 234

SCSI-2 / -3 236
ERIES NHP, NHS

MINI DELTA RIBBON 241
SERIES NCP, NCS

SCSI AND MINI DELTA RIBBON COVERS 243
SERIES NHA, NCA

SCSI-4 AND COVERS 245
SERIES RCS, RCP, RCA

HIGH DENSITY AND STANDARD D-SUB 248
SERIES CT, D**

MINIDIN 268

EARPHONE AND MODULAR JACKS 277
SERIES LJE, AJ, TS

SPECIFICATIONS

Insulation Resistance:	100MΩ min.
Current Rating:	1.5A max.
Voltage Rating:	30V AC
Contact Resistance:	30mΩ max.
Withstanding Voltage:	100V AC for 1 minute
Operating Temp. Range:	0°C to +50°C

PART NUMBER

USB-3.0MC - 10AB - S9 - BL - R

- Series No.
- No of Pins = 10 Type A
- 90° SMTBL = 15μ" Au Plating
- Selective
- Reel Packaging

MATERIALS AND FINISH

Insulator:	LCP, UL94V-0 Rated
Contact Area:	Phosphor Bronze and Brass
Shell:	Stainless Steel

OUTLINE DIMENSIONS

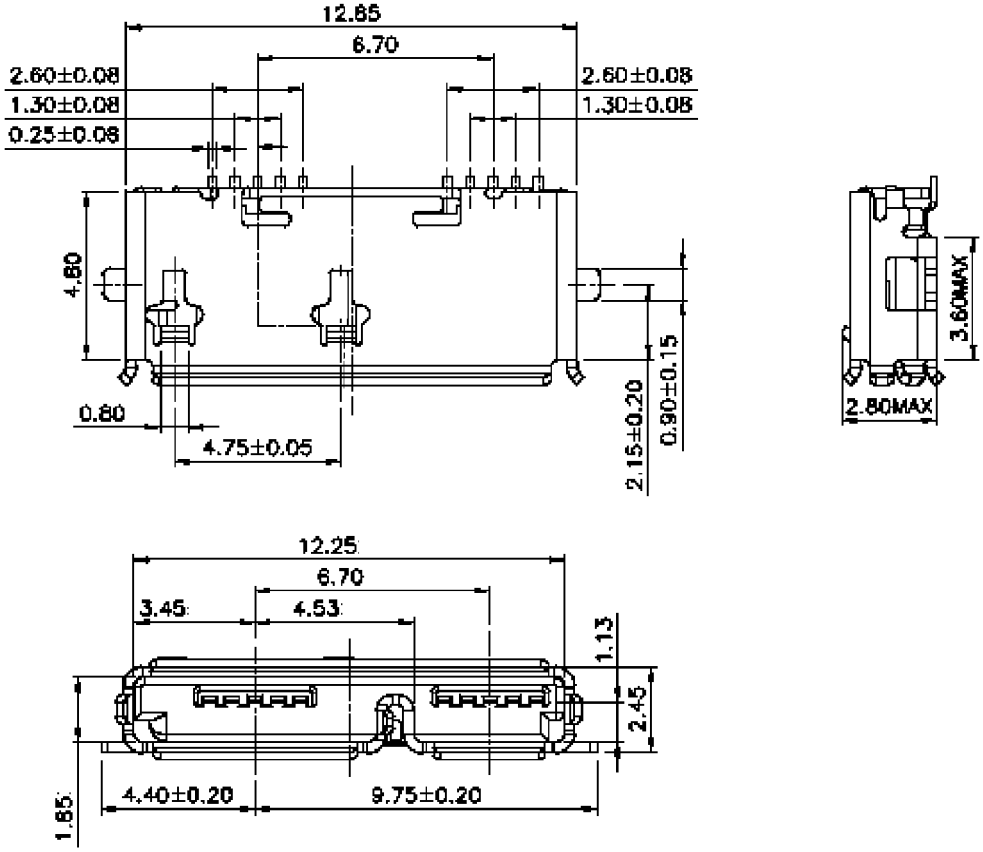

RECOMMENDED PCB LAYOUT

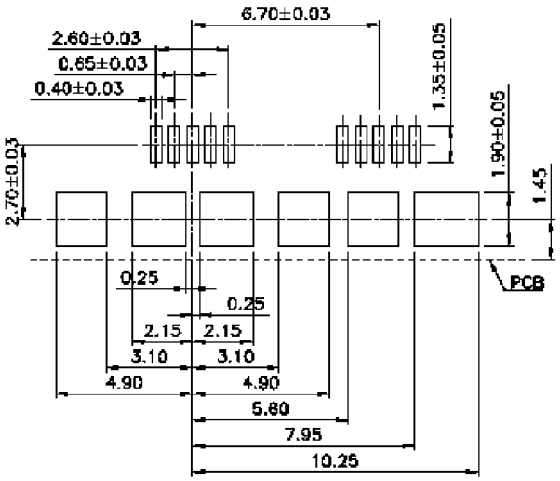

Trading Division

SPECIFICATIONS

Insulation Resistance:	100MΩ min.
Current Rating:	1.5A max.
Voltage Rating:	30V AC
Contact Resistance:	30mΩ max.
Withstanding Voltage:	100V AC for 1 minute
Operating Temp. Range:	0°C to +50°C

PART NUMBER

USB-3.0MC - 10B - S9 - BL - R

- Series No.
- No of Pins = 10 Type B
- 90° SMT Type
- BL = 15μ" Au Plating Selective
- Reel Packaging

MATERIALS AND FINISH

Insulator:	LCP, UL94V-0 Rated
Contact Area:	Phosphor Bronze
Shell:	Stainless Steel

OUTLINE DIMENSIONS

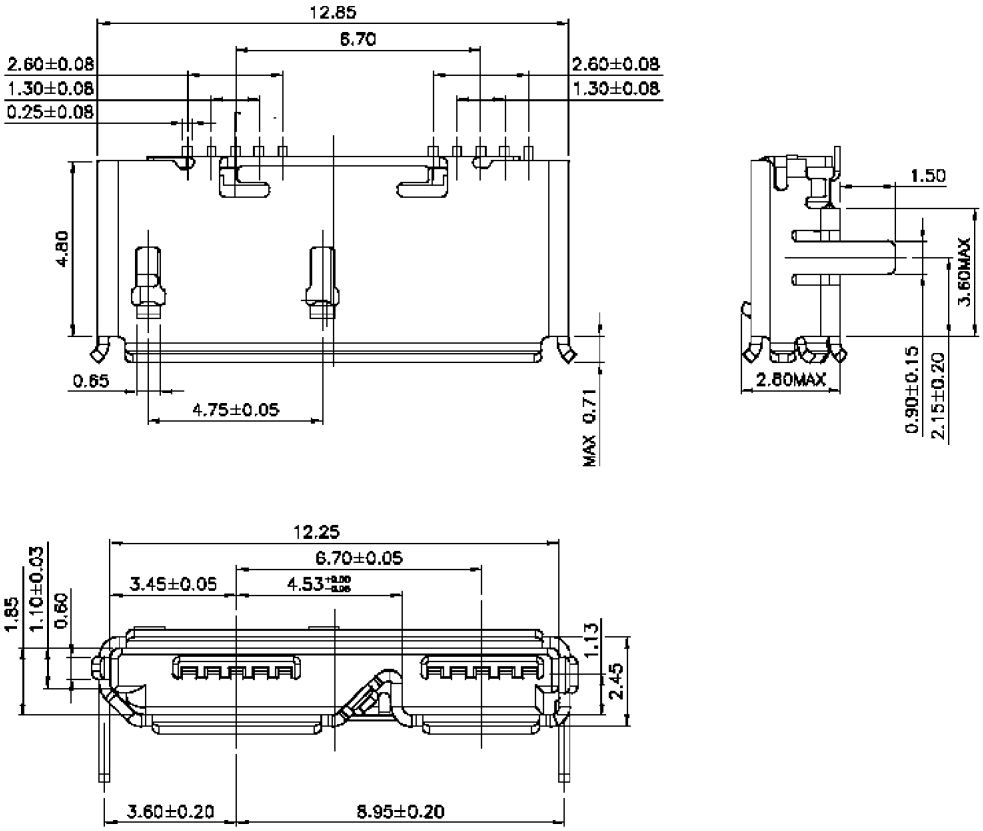

RECOMMENDED PCB LAYOUT

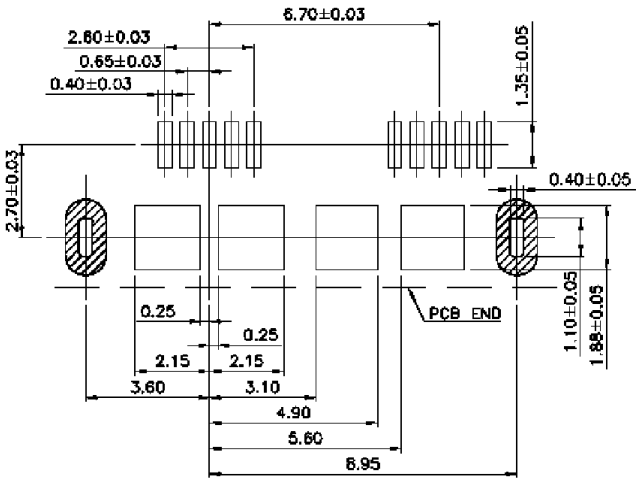

SPECIFICATIONS

Insulation Resistance:	100MΩ min.
Current Rating:	1.5A max.
Voltage Rating:	30V AC
Contact Resistance:	30mΩ max.
Withstanding Voltage:	100V AC for 1 minute
Operating Temp. Range:	0°C to +50°C

MATERIALS AND FINISH

Insulator:	LCP, UL94V-0 Rated
Contact Area:	Phosphor Bronze and Brass
Shell:	Stainless Steel

PART NUMBER

USB-3.0MC - 10A - P - BL - BU

- Series No.
- No of Pins = 10 Type A
- Solder Plug Type
- BL = 15μ" Au Plating Selective
- Bulk Packaging

OUTLINE DIMENSIONS

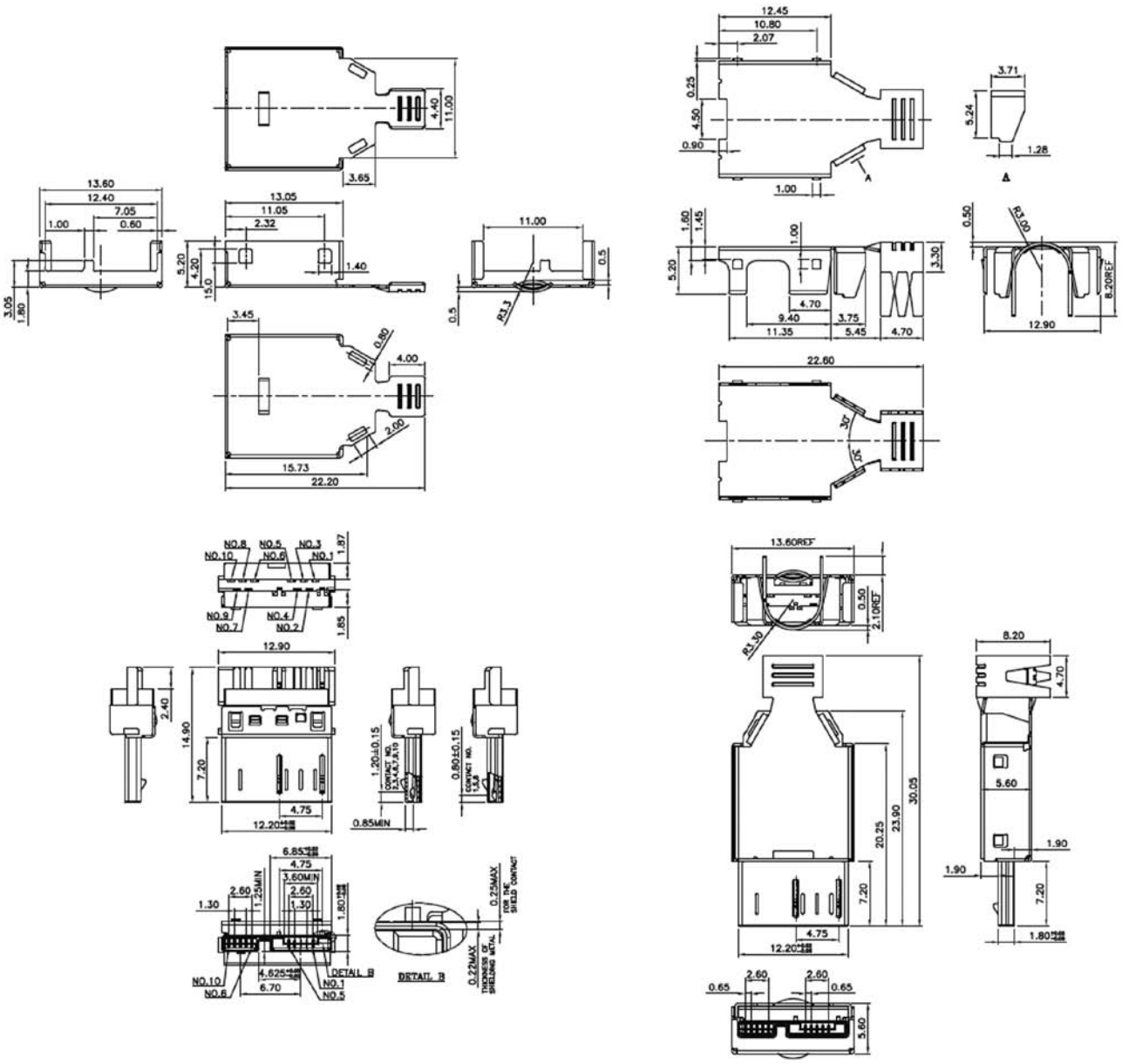

Trading Division

SPECIFICATIONS

Insulation Resistance:	100MΩ min.
Current Rating:	1.5A max.
Voltage Rating:	30V AC
Contact Resistance:	30mΩ max.
Withstanding Voltage:	100V AC for 1 minute
Operating Temp. Range:	0°C to +50°C

MATERIALS AND FINISH

Insulator:	PBT, UL94V-0 Rated
Contact Area:	Phosphor Bronze and Brass
Shell:	Stainless Steel
Latch:	Stainless Steel

PART NUMBER

USB-3.0MC - 10B - P - BL - BU

- Series No.
- No of Pins = 10 Type B
- Solder Plug Type
- BL = 15μ" Au Plating Selective
- Bulk Packaging

OUTLINE DIMENSIONS

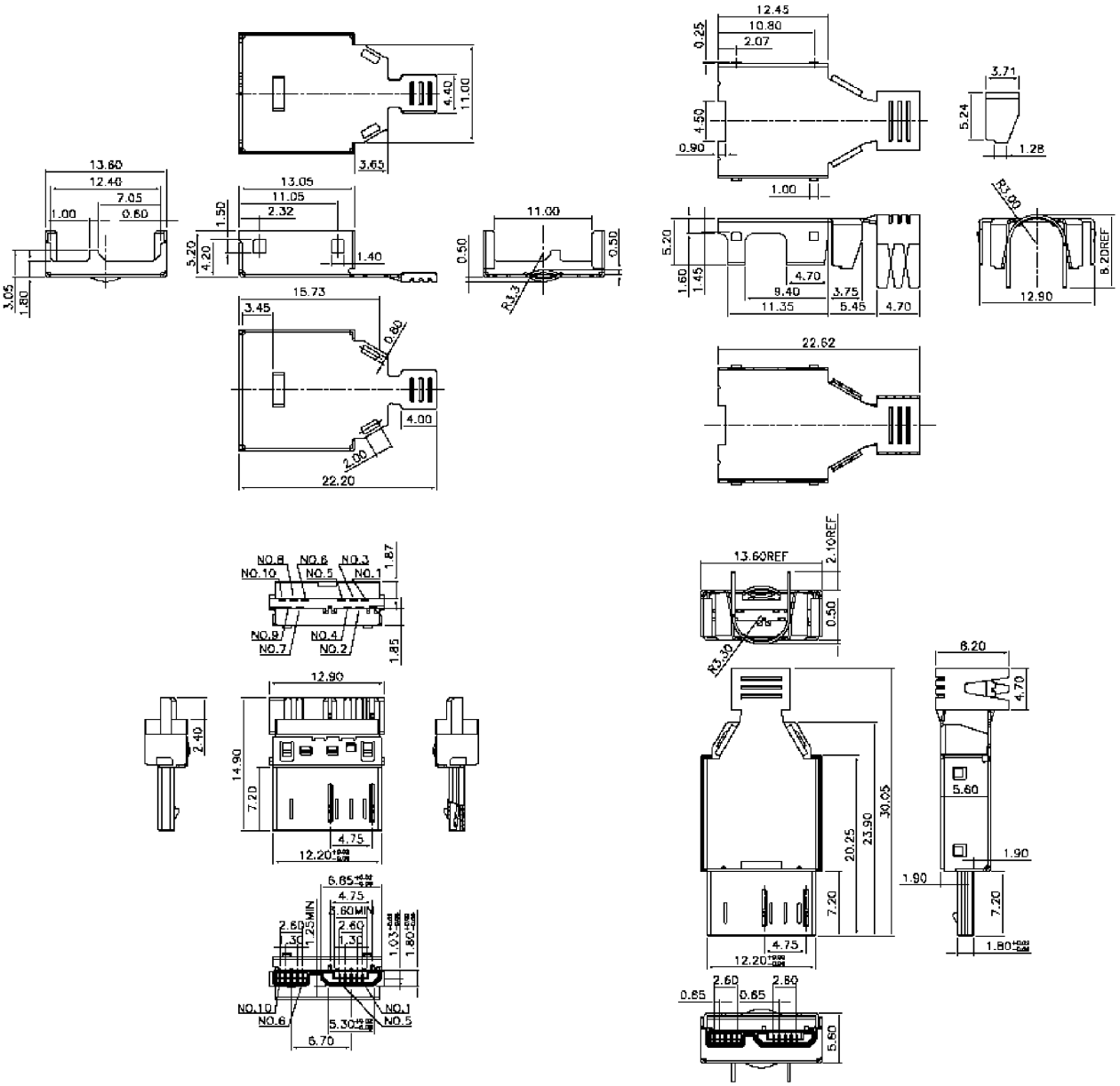

SPECIFICATIONS

Insulation Resistance:	1,000MΩ min.
Current Rating:	1.5A max.
Voltage Rating:	30V AC
Contact Resistance:	30mΩ max.
Withstanding Voltage:	100V AC for 1 minute
Operating Temp. Range:	0°C to +50°C

PART NUMBER

USB-3.0 - 9A - T9 - BL - TR

- Series No.
- No of Pins = 9 Type A
- 90° Through Hole Type
- BL = 15μ" Au Plating Selective
- Tray Packaging

MATERIALS AND FINISH

Insulator:	PBT, UL94V-0 Rated
Contact Area:	Phosphor Bronze and Brass
Shell:	Brass

OUTLINE DIMENSIONS

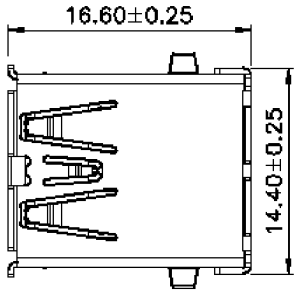

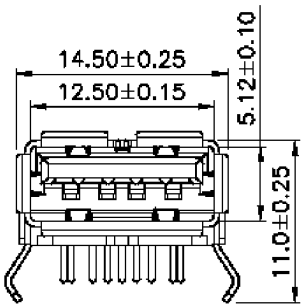

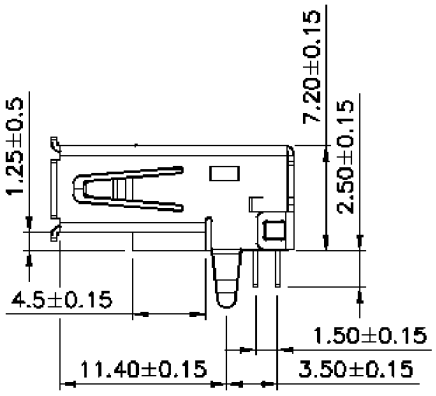

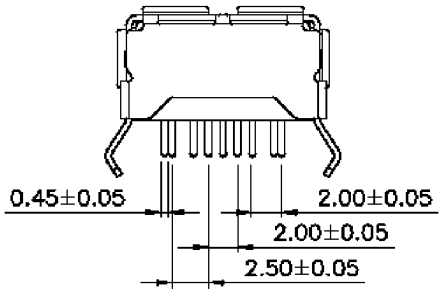

RECOMMENDED PCB LAYOUT

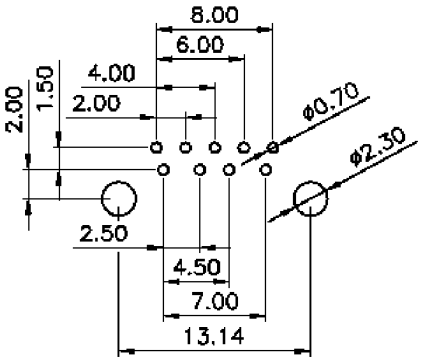

Trading Division

SPECIFICATIONS

Insulation Resistance:	100MΩ min. at 250V DC
Current Rating:	1.8A for VBUS and GND 0.25A for all other contacts
Contact Resistance:	30mΩ max. for VBUS and GND 50mΩ max. for all other contacts
Withstanding Voltage:	100V AC / minute
Operating Temp. Range:	-20°C to +85°C
Mating Cycles:	5,000 times
Tape and Reel Packaging:	300 per reel

PART NUMBER

USB-3.0 - A9 - S9 - BL - R

- Series No.
- No of Pins = 9 Type A
- 90° SMT
- BL = Plating Au Flash Selective
- Reel Packaging

MATERIALS AND FINISH

Insulator:	Thermoplastic, UL94HB Rated
Shell:	Copper Alloy
Contact Area:	Copper Alloy
Solder Area:	Tin over Ni
Plating:	2μ" Au over Ni

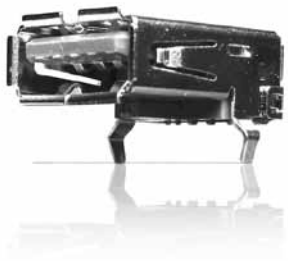

OUTLINE DIMENSIONS (USB-3.0-A-S9-FL-R)

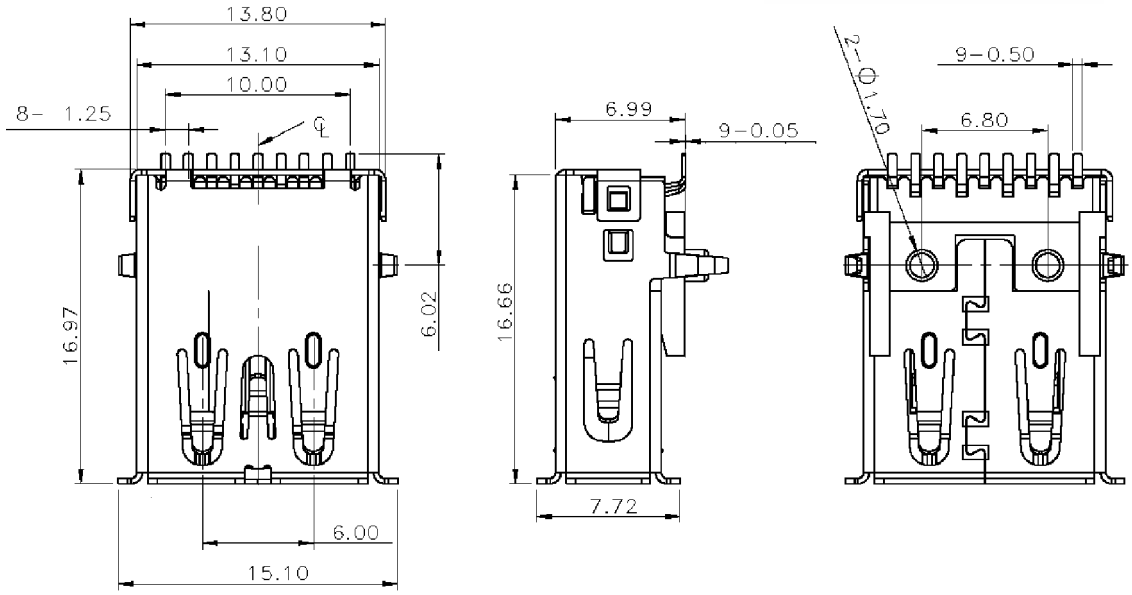

RECOMMENDED PCB LAYOUT

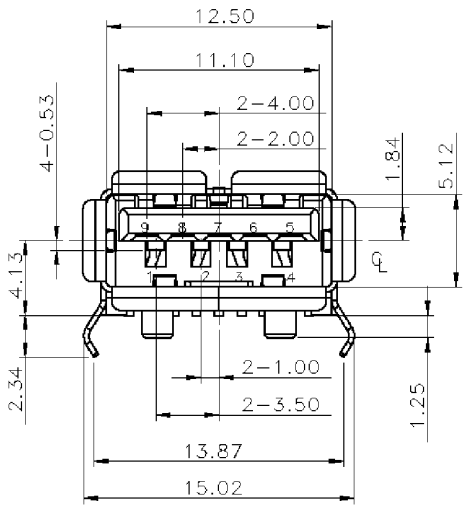

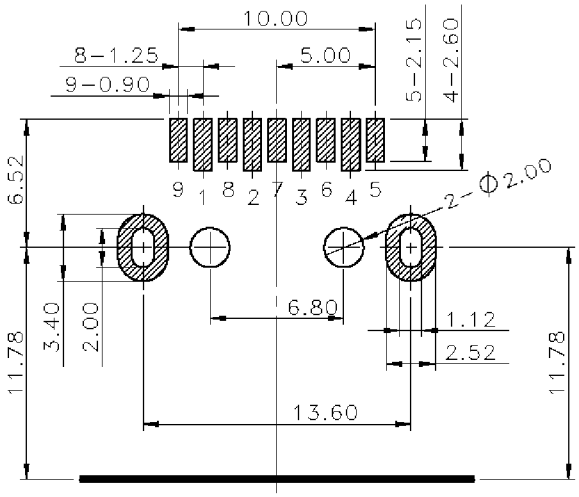

Top View

SPECIFICATIONS

Insulation Resistance:	100MΩ min. at 250V DC
Current Rating:	1.8A for VBUS and GND
	0.25A for all other contacts
Contact Resistance:	30mΩ max. for VBUS and GND
	50mΩ max. for all other contacts
Withstanding Voltage:	100V AC / minute
Operating Temp. Range:	-20°C to +85°C

PART NUMBER

USB-3.0-A-T9-DPS-2-FL-T
(without EMI guide)

USB-3.0-A-T9-DPS-4-FL-T
(with EMI guide)

MATERIALS AND FINISH

Insulator:	Thermal plastic, UL94HB
Shell:	Copper Alloy
Contact Area:	Copper Alloy
Solder Area:	Tin over Ni
Plating:	2µ" Au over Ni

OUTLINE DIMENSIONS (USB-3.0-A-T9-DPS-*-FL-T)

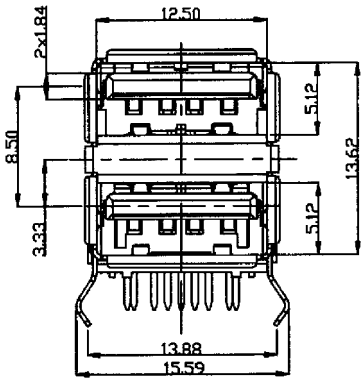

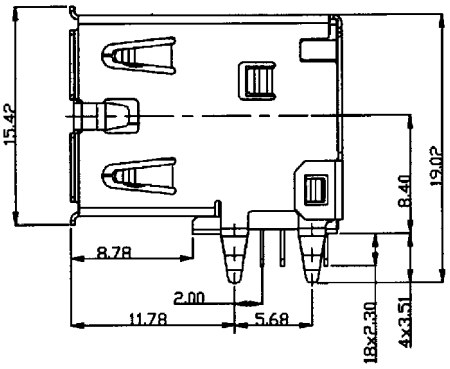

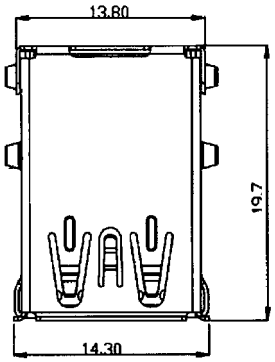

USB-3.0-A-T9-DPS-2-FL-T
(without EMI guide)

USB-3.0-A-T9-DPS-4-FL-T
(with EMI guide)

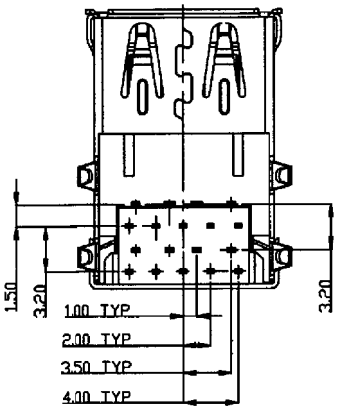

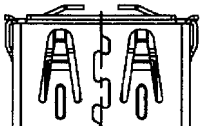

with EMI

RECOMMENDED PCB LAYOUT

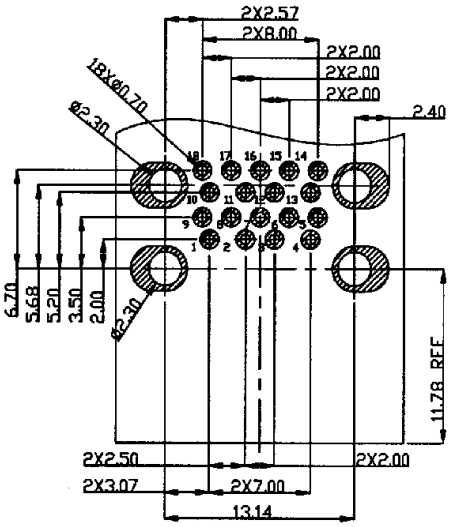

Top View

Trading Division

SPECIFICATIONS

Insulation Resistance:	1,000MΩ min.
Current Rating:	1.5A max.
Voltage Rating:	30V AC
Contact Resistance:	30mΩ max.
Withstanding Voltage:	100V AC / minute
Operating Temp. Range:	0°C to +50°C

PART NUMBER

USB-3.0 - 9A - P - *L -BU

- Series No.
- No of Pins = 9 Type A
- Solder Plug Type
- BL = 15μ" Au Plating Selective
  AL = 30μ" Au Plating Selective
- Bulk Packaging

MATERIALS AND FINISH

Insulator:	PBT, UL94V-0 Rated
Contact Area:	Spcc
Shell:	Stainless Steel
Latch:	Stainless Steel

OUTLINE DIMENSIONS

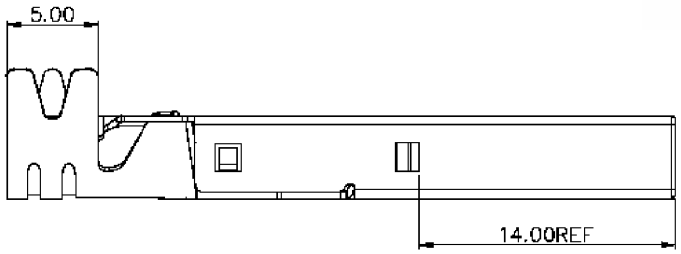

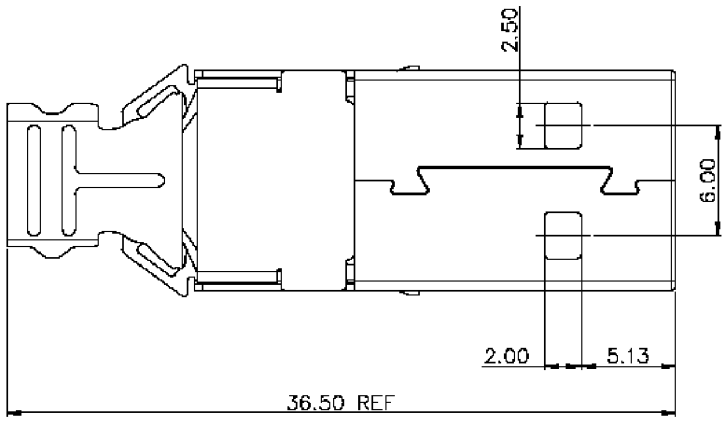

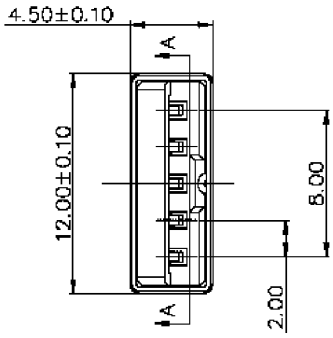

SECTION A- A

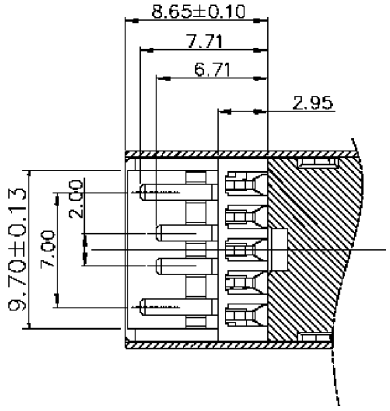

SPECIFICATIONS

Insulation Resistance:	1,000MΩ min.
Current Rating:	1.5A max.
Voltage Rating:	30V AC
Contact Resistance:	30mΩ max.
Withstanding Voltage:	100V AC / minute
Operating Temp. Range:	0°C to +50°C

PART NUMBER

USB-3.0 - 9B - T1 - *L -TR

- Series No.
- No of Pins = 9 Type B
- 180° Through Hole Type
- BL = 15μ" Au Plating Selective
  AL = 30μ" Au Plating Selective
- Tray Packaging

MATERIALS AND FINISH

Insulator:	PBT, UL94V-0 Rated
Contact Area:	Brass
Shell:	Brass

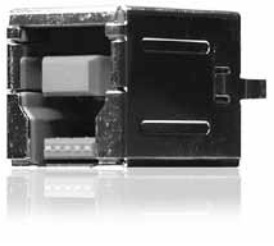

OUTLINE DIMENSIONS

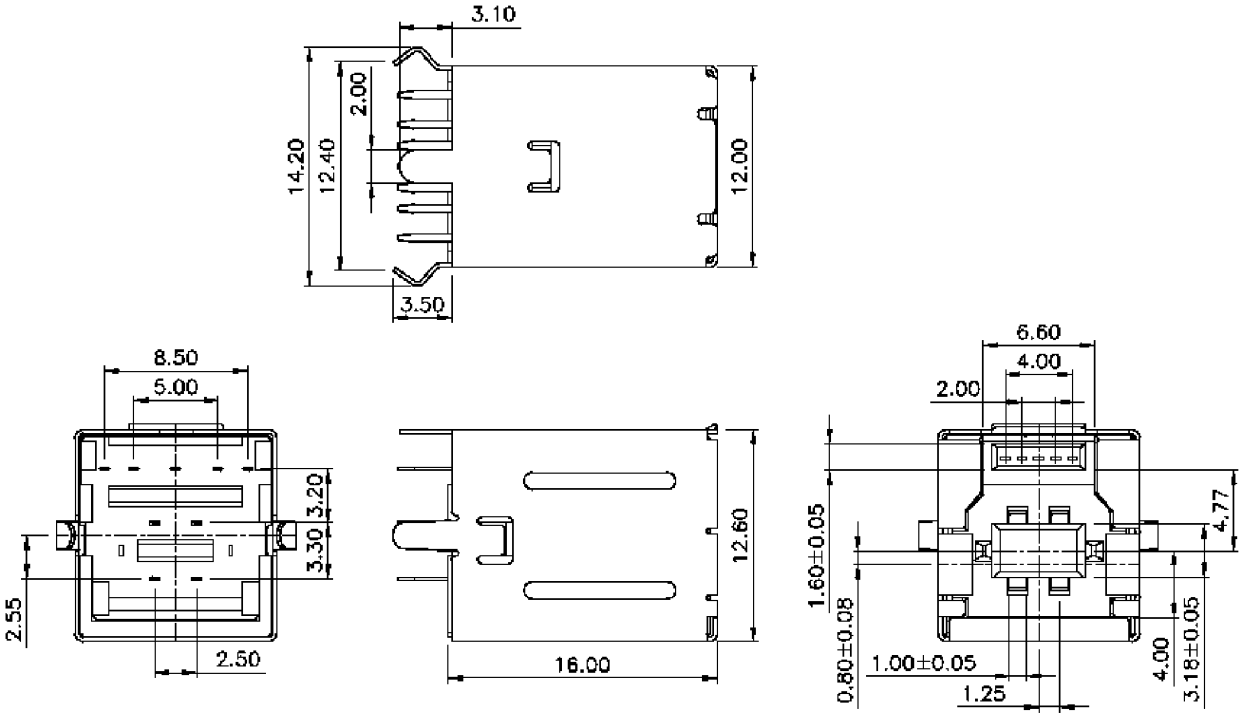

RECOMMENDED PCB LAYOUT

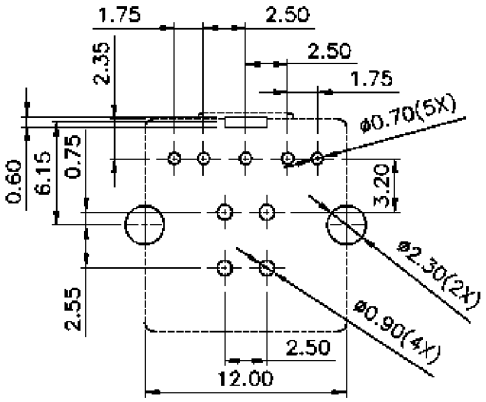

Trading Division

SPECIFICATIONS

Insulation Resistance:	1,000MΩ min.
Current Rating:	1.5A max.
Voltage Rating:	30V AC
Contact Resistance:	30mΩ max.
Withstanding Voltage:	100V AC / minute
Operating Temp. Range:	0°C to +50°C

PART NUMBER

USB-3.0 - 9B - T9 - BL - TR

- Series No.
- No of Pins = 9 Type B
- 90° Through Hole Type
- BL = 15μ" Au Plating Selective
- Tray Packaging

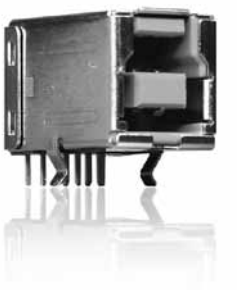

MATERIALS AND FINISH

Insulator:	PBT, UL94V-0 Rated
Shell:	Phosphor Bronze and Brass
Contact Area:	Brass

OUTLINE DIMENSIONS

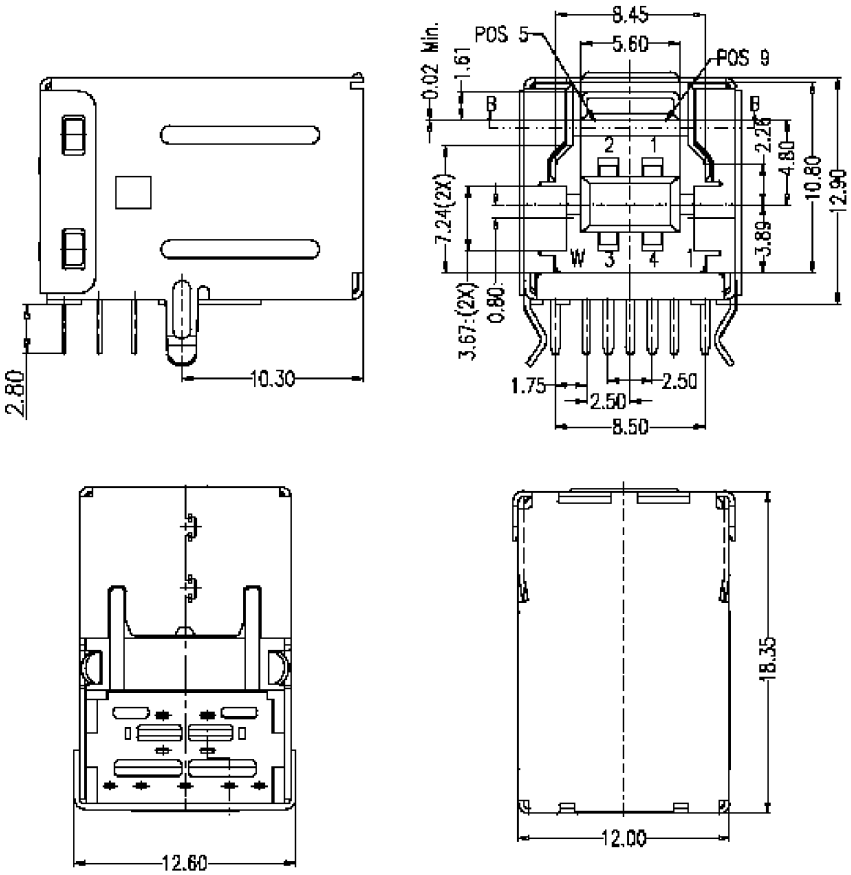

RECOMMENDED PCB LAYOUT

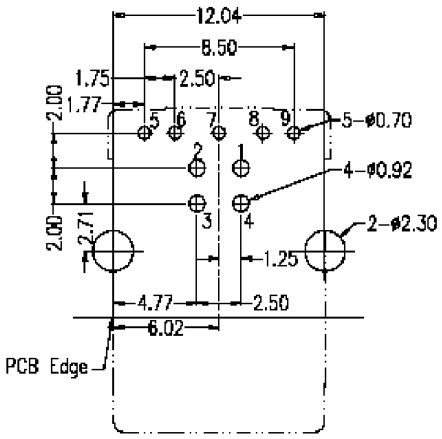

SPECIFICATIONS

Insulation Resistance:	1,000MΩ min.
Current Rating:	1.5A max.
Voltage Rating:	30V AC
Contact Resistance:	30mΩ max.
Withstanding Voltage:	100V AC for 1 minute
Operating Temp. Range:	0°C to +50°C

PART NUMBER

USB-3.0 - 9B - P - BL - BU

- Series No.
- No of Pins = 9 Type B
- Solder Type
- BL = 15μ" Au Plating Selective
- Bulk Packaging

MATERIALS AND FINISH

Insulator:	PBT, UL94V-0 Rated
Contact Area:	Phosphor Bronze
Shell:	Spcc

OUTLINE DIMENSIONS

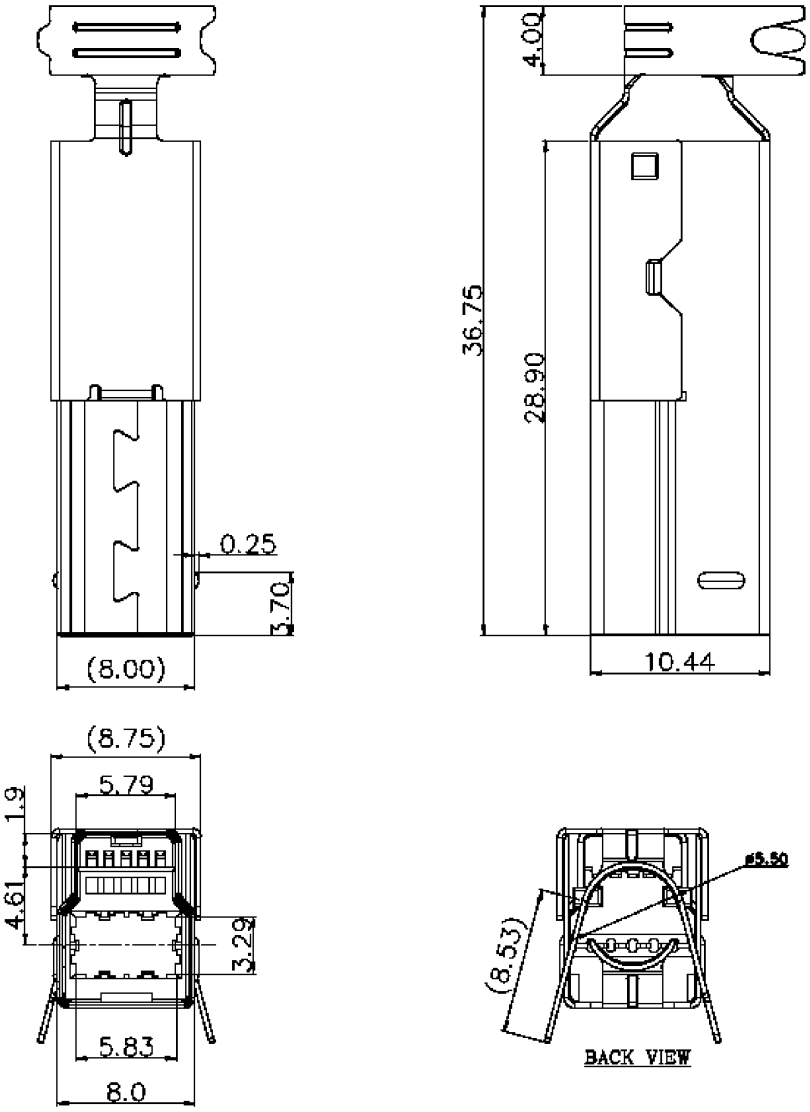

MATERIALS AND FINISH

Insulator:	PVC 45P RO Blue (T-624)
Cable:	UL20276
Shell:	Nickel
Contact:	Gold 30µ“

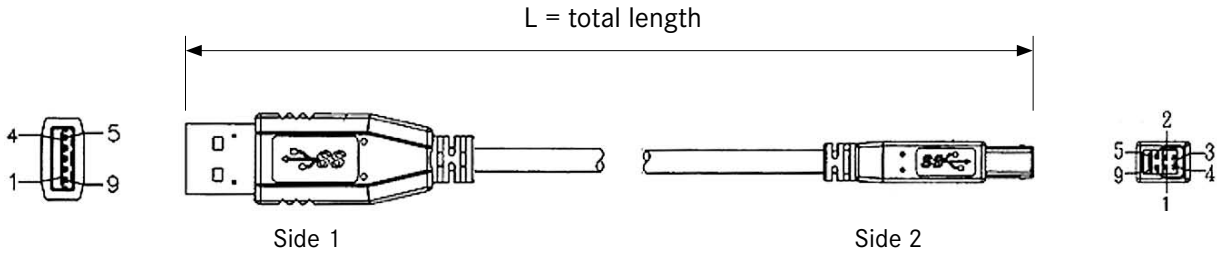

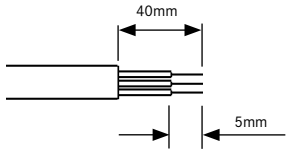

*FT = Cut and Jacket Stipped

Side 2

PART NUMBER

CA UB * 3.0 * / ** * 3.0 * R ****

Cable Assembly

Side 1

USB

A = USB-A B = USB-B

USB Type 3.0

P = Plug S = (Socket only on request)

Side 2

UB = USB / FS = Straight wire cut / FT = Cut and Stripped*

A = USB-A B = USB-B (Not required with Side 2: FS or FT)

USB Type 3.0 (Not required with Side 2: FS or FT)

P = Plug S = (Socket only on request)

R = Round Cable

L = Length in mm

SPECIFICATIONS

Insulation Resistance:	1,000MΩ min.
Current Rating:	1A
Voltage Rating:	30V ACrms
Contact Resistance:	30mΩ max. (initial)
Withstanding Voltage:	500V AC

PART NUMBER

USB-A-001A

MATERIALS AND FINISH

Housing:	PBT, Glass Filled (UL94V-0)
Shell:	Copper Alloy, Ni plated
Contacts:	Copper Alloy
Contact Plating:	Solder Terminal - Sn over Ni
	Mating Area for USB-A-001A = Au Flash over Ni

SINGLE PORT TYPE (USB-A-001A)

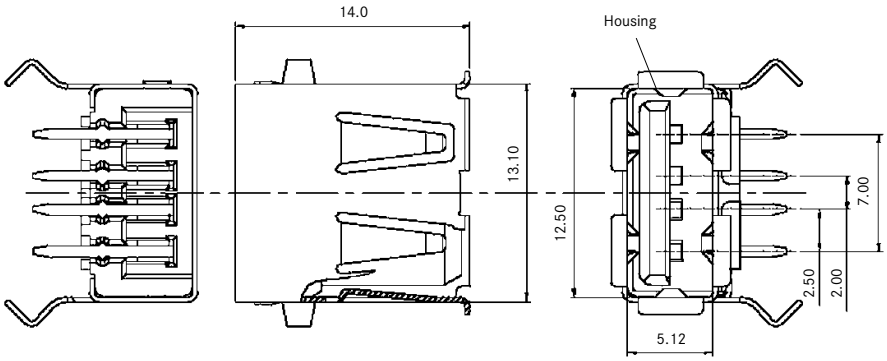

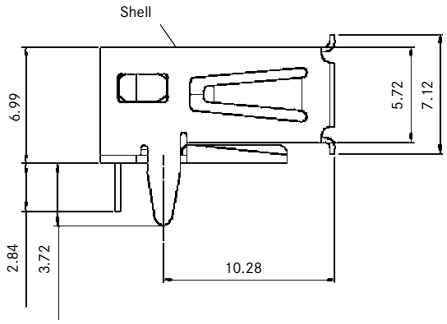

RECOMMENDED PCB LAYOUT

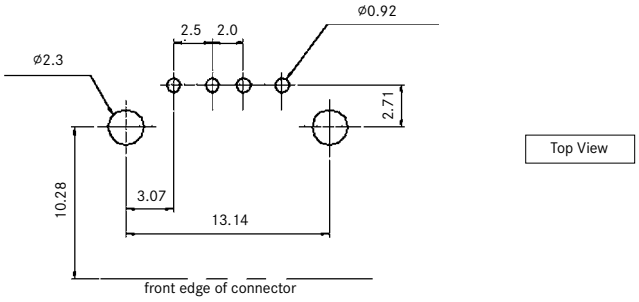

Trading Division

SPECIFICATIONS

Insulation Resistance:	1,000 MΩ min.
Current Rating:	1A
Voltage Rating:	30V ACrms max.
Contact Resistance:	30 mΩ max.
Withstanding Voltage:	500V AC for 1 minute

PART NUMBER

USB-A-002A

MATERIALS AND FINISH

Housing:	PBT, Glass Filled (UL94V-0)
Shell:	Copper Alloy, Ni plated
Contacts:	Copper Alloy
Contact Plating:	Solder Terminal - Sn over Ni
	Mating Area for USB-A-002A = Au Flash over Ni

DOUBLE PORT TYPE (USB-A-002A)

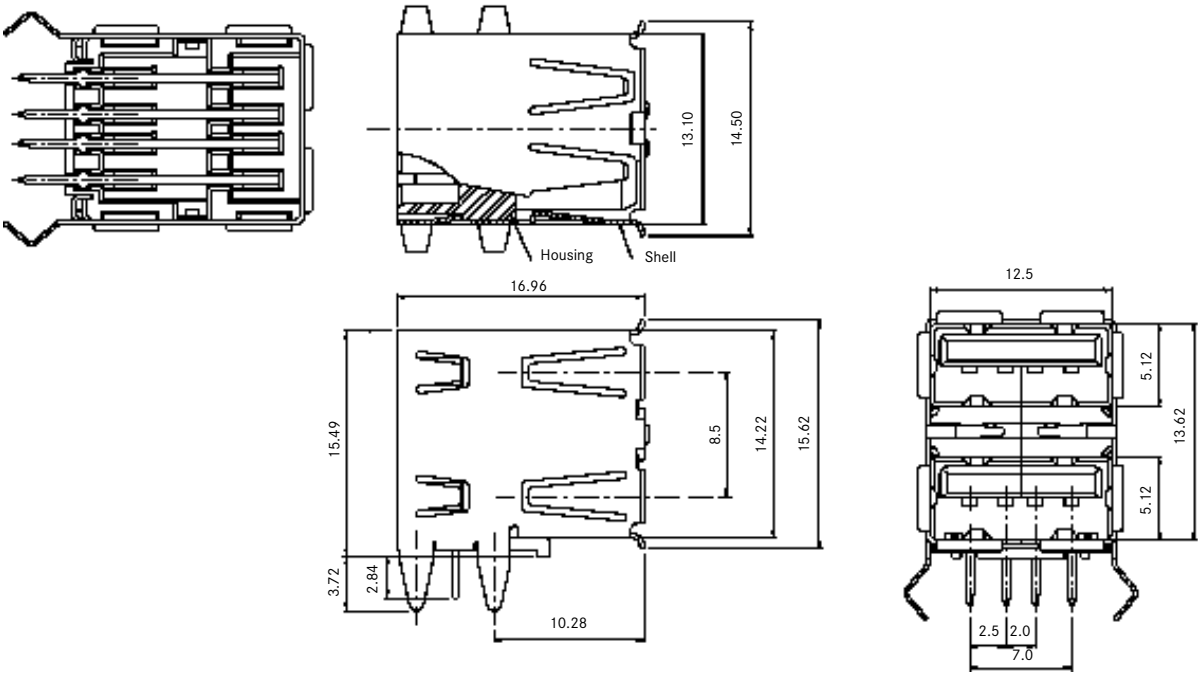

RECOMMENDED PCB LAYOUT

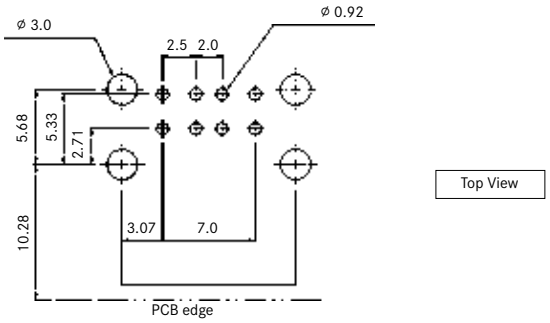

SPECIFICATIONS

Insulation Resistance:	1000MΩ min.
Current Rating:	1A
Voltage Rating:	30V AC (rms)
Withstanding Voltage:	500V AC
Contact Resistance:	30mΩ max.

PART NUMBER

USB-A-003
*USB-A-003-30-V1

* See Materials and Finish

MATERIALS AND FINISH

Housing:	PBT, Glass Filled (UL94V-0)
Shell:	Tin over Ni
Contacts:	Copper Alloy
Contact Plating:	Solder Terminal - Sn over Ni
	Mating Area for USB-A-003 = Au Flash over Ni
	Mating Area for USB-A-003-30-V1 = 30μ" Au over Ni

SMT TYPE

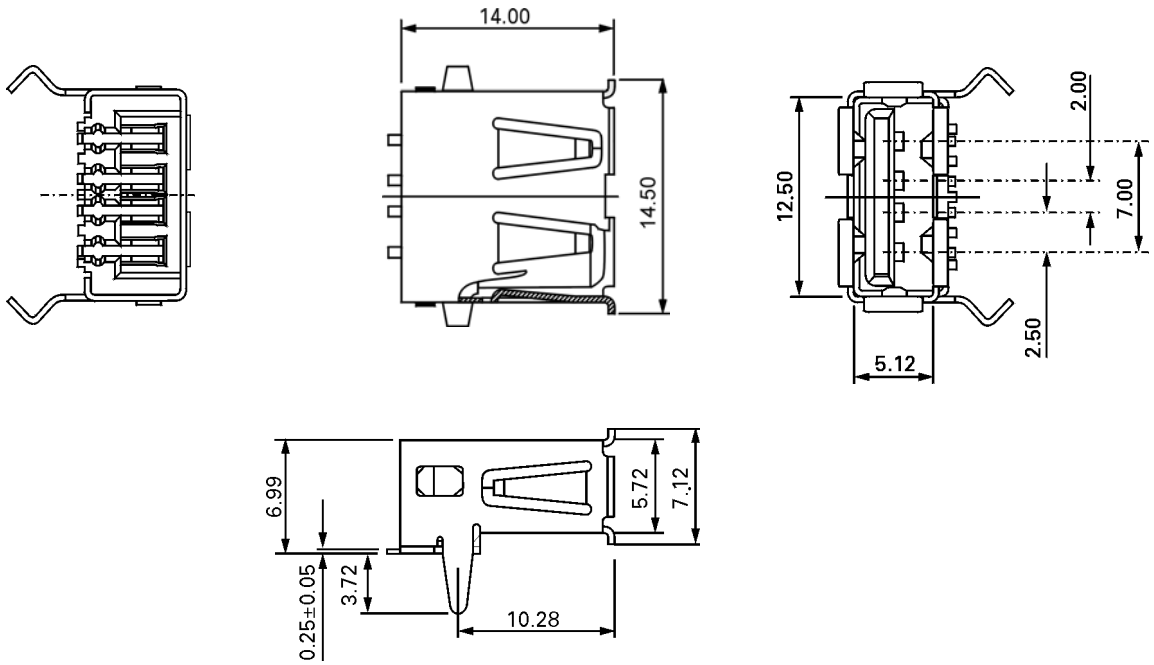

RECOMMENDED PCB LAYOUT

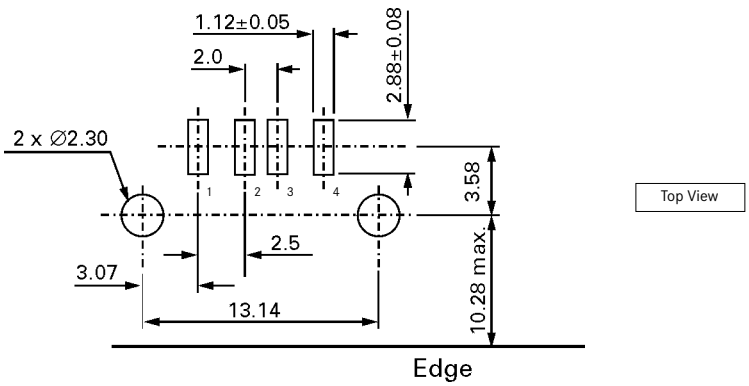

Trading Division

SPECIFICATIONS

Insulation Resistance:	1000MΩ min.
Current Rating:	1A max. per contact
Voltage Rating:	30V ACrms max.
Withstanding Voltage:	500V AC
Contact Resistance:	30mΩ max. (initial)

PART NUMBER

USB-A-004
*USB-A-004-30-V1

* See Materials and Finish

MATERIALS AND FINISH

Housing:	PBT, Glass Filled (UL94V-0)
Shell:	Copper Alloy, Ni plated
Contacts:	Copper Alloy
Contact Plating:	Solder Terminal - Sn over Ni
	Mating Area for USB-A-004 = Au Flash over Ni
	Mating Area for USB-A-004-30-V1 = 30μ" Au over Ni

180° THROUGH HOLE TYPE

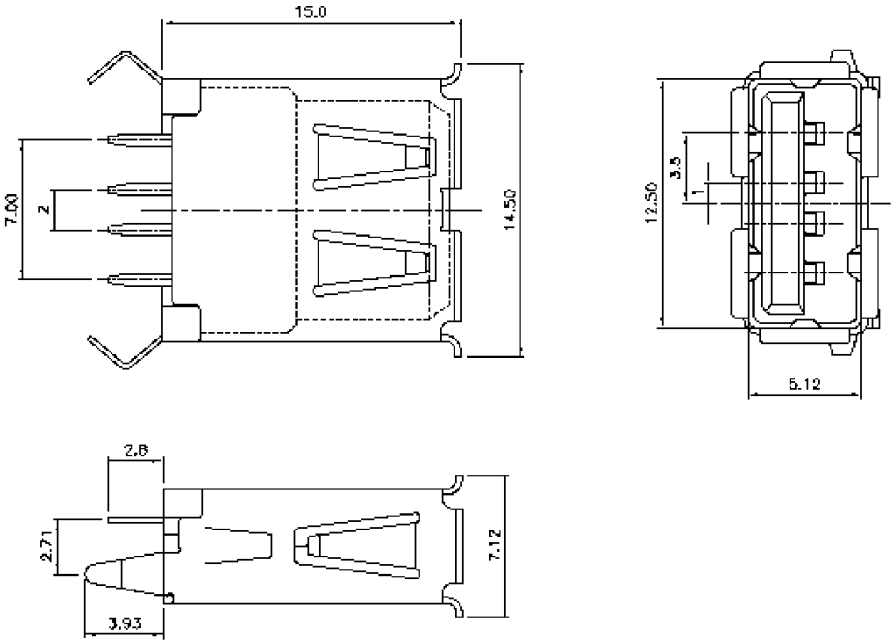

RECOMMENDED PCB LAYOUT

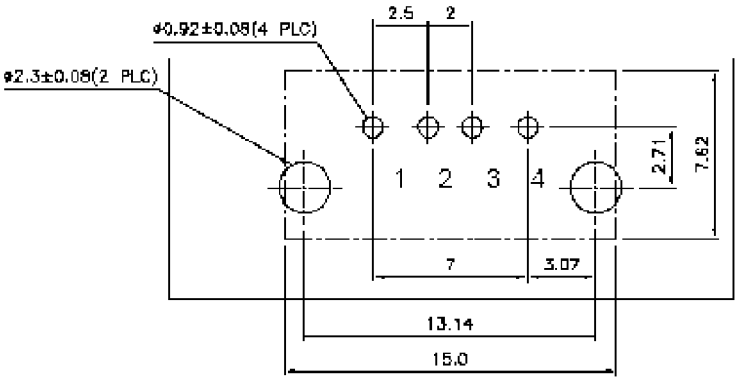

Top View

SPECIFICATIONS

Insulation Resistance:	1000MΩ min.
Current Rating:	1A max. per contact
Voltage Rating:	30V ACrms max.
Withstanding Voltage:	500V AC
Contact Resistance:	30mΩ max. (initial)

PART NUMBER

USB-A-005A

MATERIALS AND FINISH

Housing:	PBT, Glass Filled (UL94V-0)
Shell:	Copper Alloy, Ni plated
Contacts:	Copper Alloy
Contact Plating:	Solder Terminal - Sn over Ni
	Mating Area for USB-A-005A = Au Flash over Ni

VERTICAL THROUGH HOLE TYPE

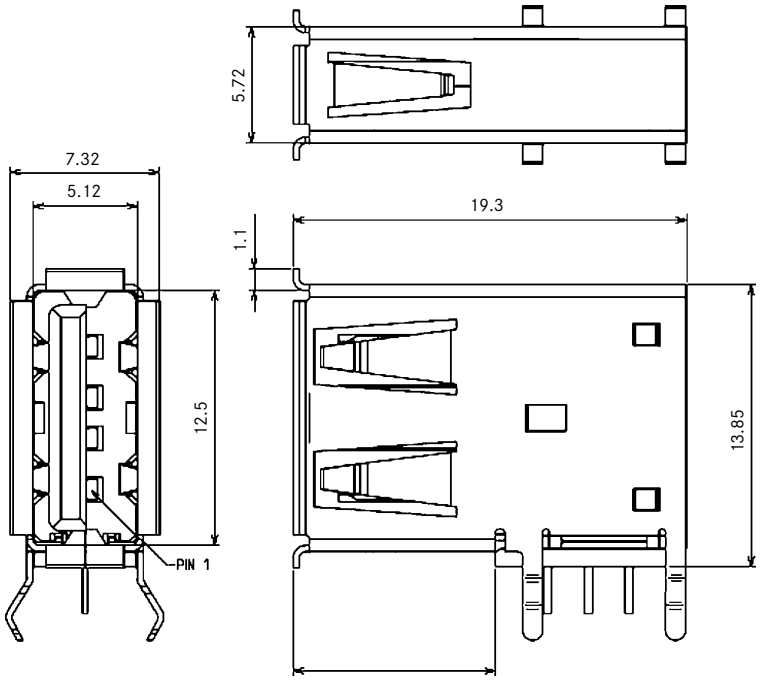

RECOMMENDED PCB LAYOUT

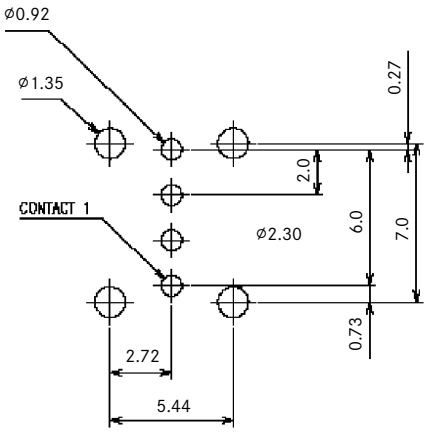

Top View

Trading Division

SPECIFICATIONS

Voltage Rating:	30V ACrms max.
Current Rating:	1A max. per contact (Signal Application only)
Contact Resistance:	25mΩ max. (initial)
Operating Temp. Range:	-55°C to +85°C
Mating Force:	3.5Kg max.
Unmating Force:	0.4Kg min.

MATERIALS AND FINISH

Housing:	PBT, 30% GF (UL94V-0)
Moulded Shell:	PVC
Contacts:	Brass 0.25t
Contact Plating:	Gold over Nickel

FEATURES

- Over-mould and cable available in black or white, minimum order quantity = 1000 meters

PART NUMBER

USB-A-P01

Note:
USB-A-P01 is only available in assembled versions with moulded strain relief.
For more details please contact Yamaichi.

OUTLINE PLUG DIMENSIONS

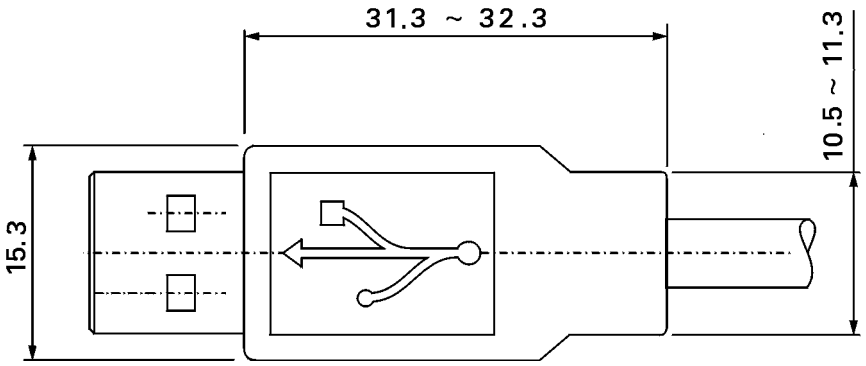

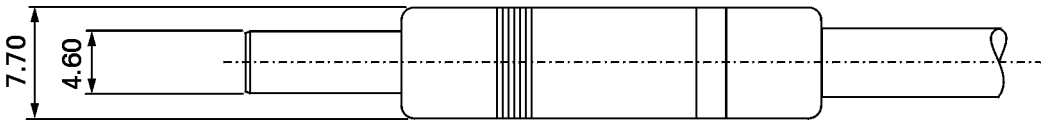

SPECIFICATIONS

Insulation Resistance:	1,000MΩ min. at 500V DC
Current Rating:	1.5A max.
Voltage Rating:	250V AC
Withstanding Voltage:	500 V AC for 1 minute
Contact Resistance:	30mΩ max.

PART NUMBER

USB-APOWER - 001 - 0*

Series No.

Insulator:
1 = 5V (black)
2 = 24V (red)
3 = 12V (green)

MATERIALS AND FINISH

Housing:	Nylon 66 + 30% glass filled UL94V-0 rated
Shell:	Phosphor Bronze, Sn over Ni
Contacts:	Phosphor Bronze
Contact Plating:	Solder area: Sn over Ni
	Mating area: 30µ'' Au over NI

FEATURES

- USB-A standard interface plus seperate power contacts

OUTLINE DIMENSIONS

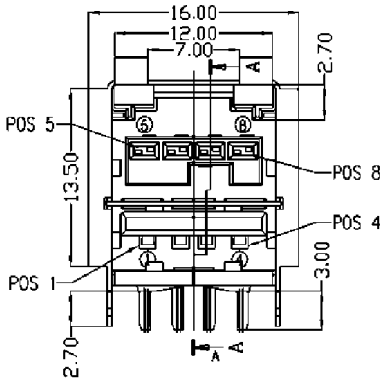

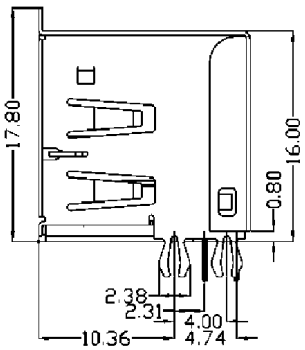

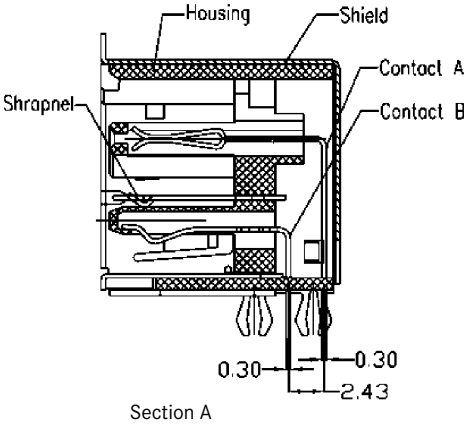

Section A

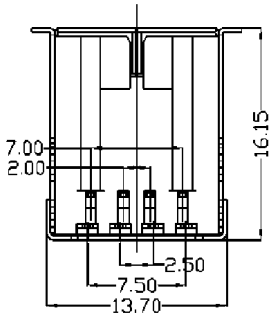

KEY POSITIONS

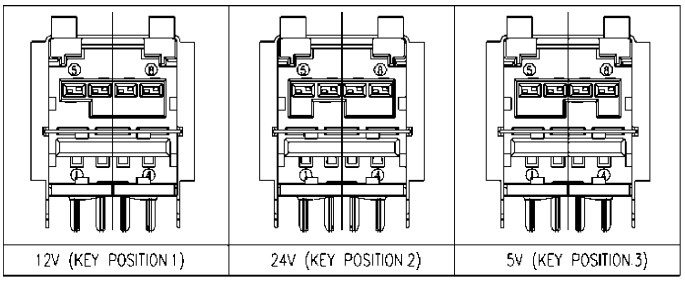

RECOMMENDED PCB LAYOUT

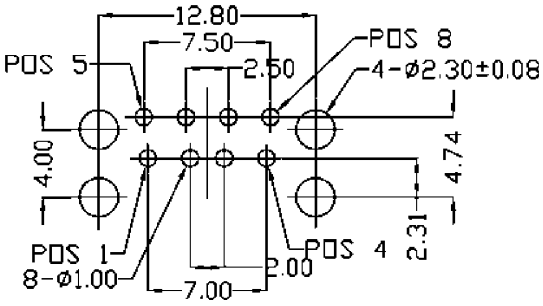

Top View

Trading Division

SPECIFICATIONS

Insulation Resistance:	1,000MΩ min. at 500V DC
Current Rating:	1.5A max.
Voltage Rating:	250V AC
Withstanding Voltage:	500V AC for 1 minute
Contact Resistance:	30mΩ max.

PART NUMBER

USB-APOWER - PO *

Series No.

Insulator:
1 = 5V (black)
2 = 24V (red)
3 = 12V (green)

MATERIALS AND FINISH

Housing:	Nylon 6T + 30% glass filled UL94V-0 rated
Shell:	Phosphor Bronze, Sn over Ni
Contacts:	Phosphor Bronze
Contact Plating:	Solder Area: Sn over Ni
	Mating Area: 30µ" Au over NI

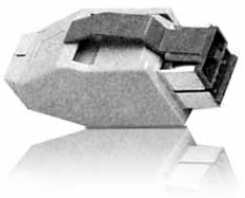

FEATURES

- USB-A standard interface plus seperate power contacts
- Assembly type plug

OUTLINE DIMENSIONS

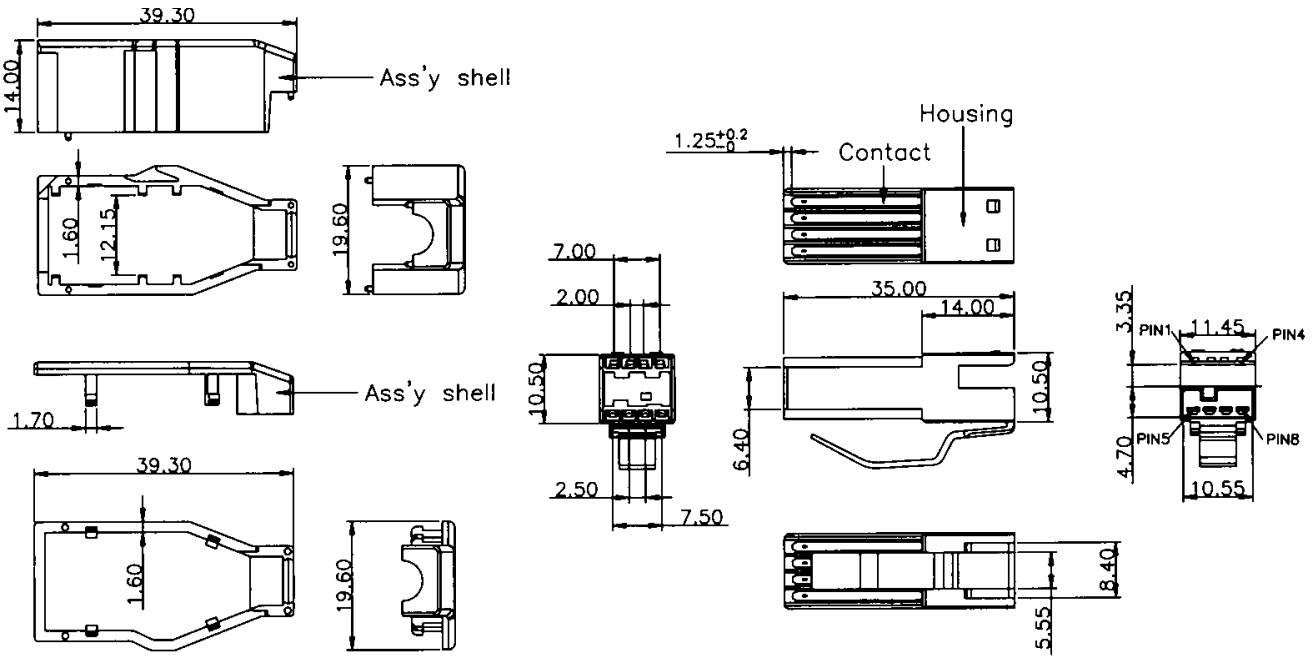

ASSEMBLY TYPE

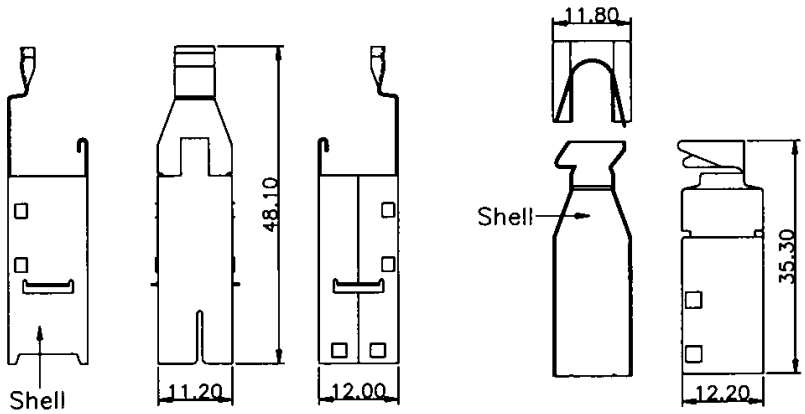

SPECIFICATIONS

Insulation Resistance:	1000MΩ min.
Current Rating:	1A max. per contact
Voltage Rating:	30V ACrms max.
Withstanding Voltage:	750V AC
Contact Resistance:	15mΩ max. (initial)

PART NUMBER

USB-B-001

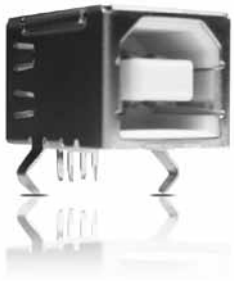

MATERIALS AND FINISH

Housing:	PBT, glass filled (UL94V-0)
Shell:	Copper Alloy, CuNi plating
Contacts:	Copper Alloy
Contact Plating:	Solder Terminal - Sn over Ni
	Mating Area for USB-B-001 = Au Flash over Ni

TH TYPE

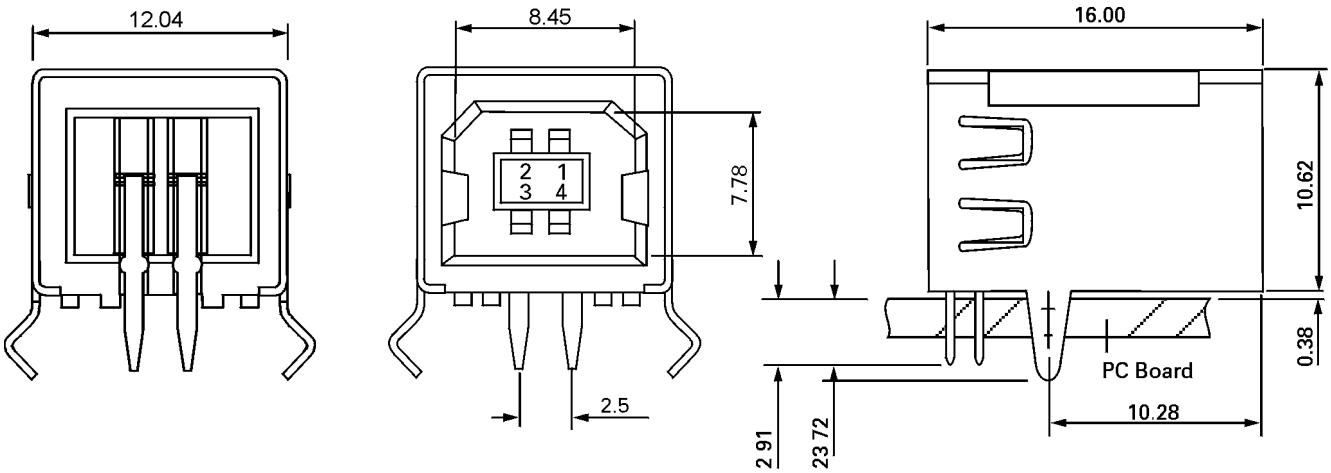

RECOMMENDED PCB LAYOUT

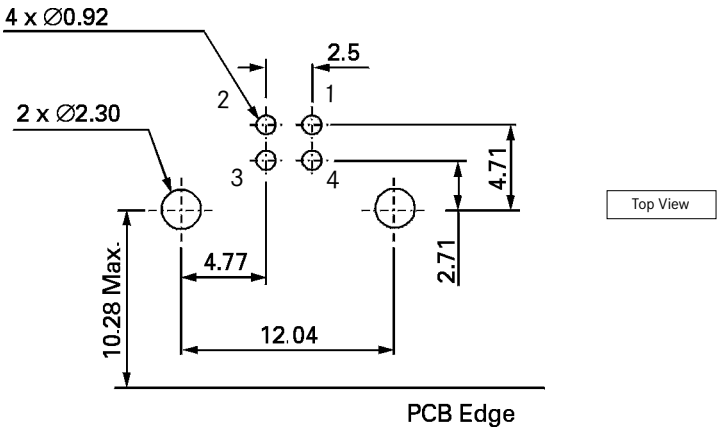

SPECIFICATIONS

Insulation Resistance:	1000MΩ min.
Current Rating:	1.5A max. per contact
Voltage Rating:	30V ACrms max.
Withstanding Voltage:	500V AC
Contact Resistance:	30mΩ max. (initial)

PART NUMBER

USB-B-004

MATERIALS AND FINISH

Housing:	PBT, glass filled (UL94V-0)
Shell:	Copper Alloy, Ni plating
Contacts:	Copper Alloy
Contact Plating:	Solder Terminal - Sn over Ni
	Mating Area for USB-B-004 = Au Flash over Ni

180° - TH TYPE

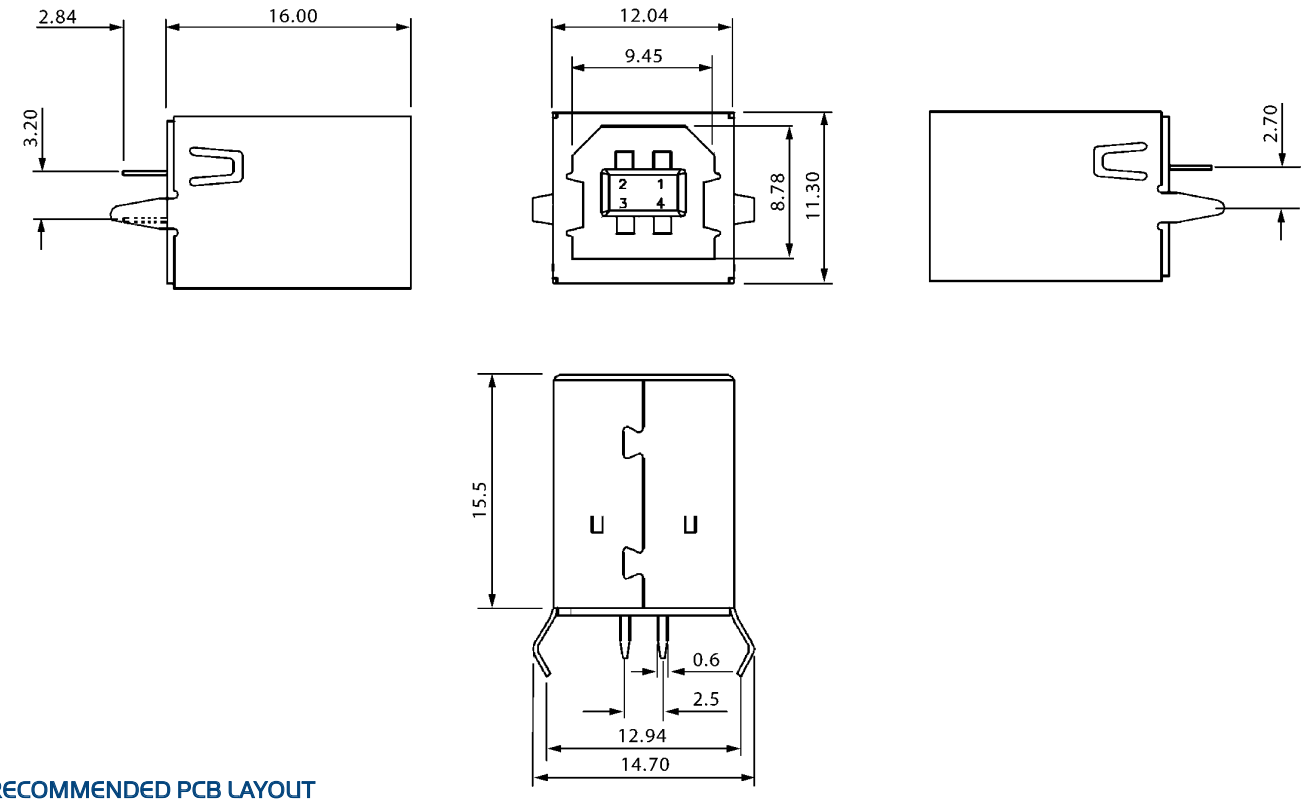

RECOMMENDED PCB LAYOUT

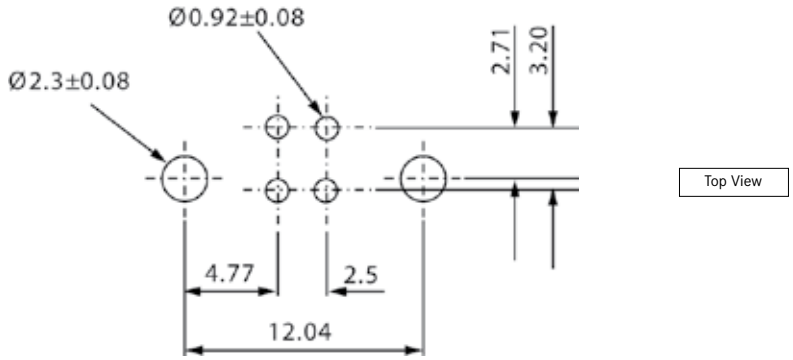

SPECIFICATIONS

Insulation Resistance:	1000MΩ min.
Withstanding Voltage:	750V AC
Current Rating:	1A max. per contact
Voltage Rating:	30V AC (rms) max.
Contact Resistance:	15mΩ max. (initial)

PART NUMBER

USB-B-P01

Note:
USB-B-P01 is only available in assembled versions with moulded strain relief.
For more details please contact Yamaichi.

MATERIALS AND FINISH

Housing:	Thermoplastic, glass filled (UL94V-0)
Shell:	Steel, Tin over Nickel
Contacts:	Copper Alloy
Contact Plating:	Gold over Nickel

OUTLINE PLUG DIMENSIONS

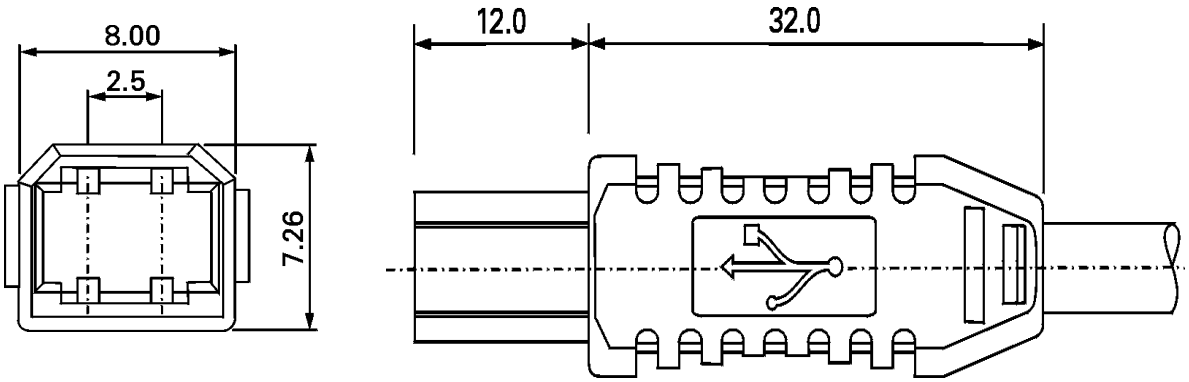

SPECIFICATIONS

Insulation Resistance:	100MΩ at 500 V
Current Rating:	0.5A
Voltage Rating:	5V AC
Withstanding Voltage:	100V AC (rms) for 1 minute
Contact Resistance:	50mΩ max.

PART NUMBER

USB-M08-003A

MATERIALS AND FINISH

Housing:	High Temp. Thermoplastic, glass filled (UL94V-0)
Shell:	Phosphor Bronze
Contacts:	Phosphor Bronze, 10μ" Au over Ni

OUTLINE DIMENSIONS

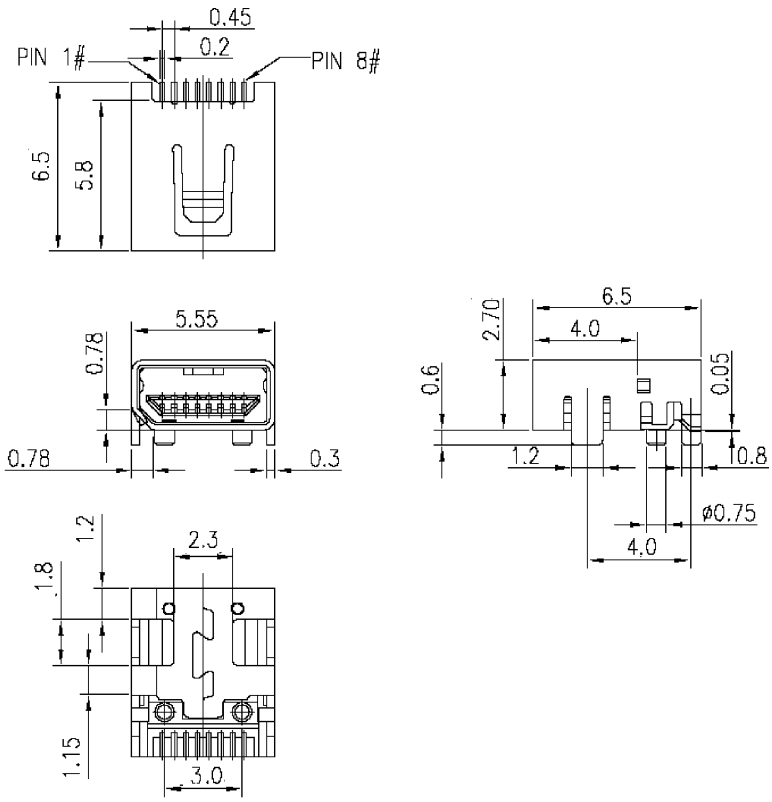

RECOMMENDED PCB LAYOUT

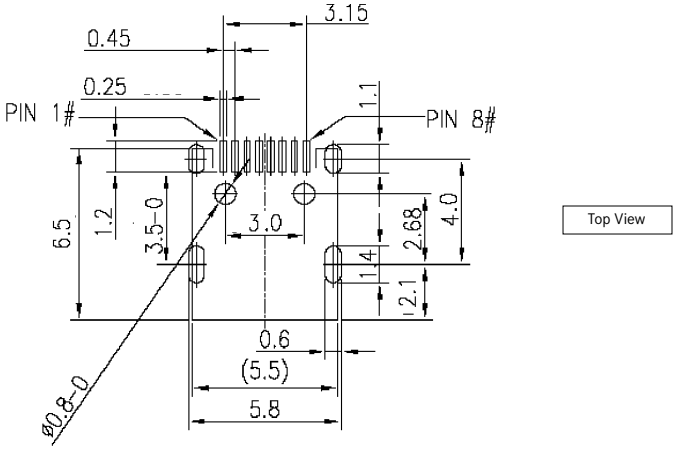

SPECIFICATIONS

Insulation Resistance:	100MΩ at 500V
Current Rating:	0.5A
Voltage Rating:	5V AC
Withstanding Voltage:	100V AC (rms) for 1 minute
Contact Resistance:	30mΩ max. (initial)

MATERIALS AND FINISH

Housing:	High Temp. Thermoplastic, glass filled (UL94V-0)
Shell:	Steel, 100µ Nickel Plated
Contacts:	Phosphor Bronze
Contact Plating:	Solder area - Sn over Ni
	Mating area - 10µ" Au over Ni

FEATURES

- Assembly version

PART NUMBER

USB-M08-P

Note:

USB-M08-P is also available in assembled version with moulded strain relief.
For more details please contact Yamaichi.

OUTLINE DIMENSIONS

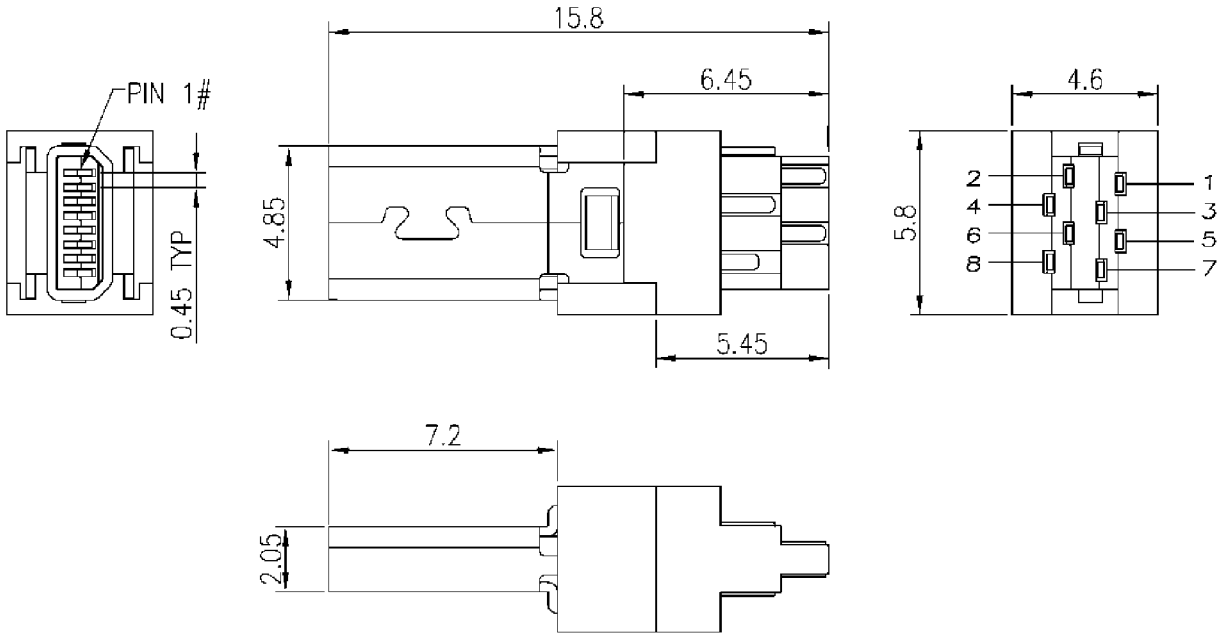

SPECIFICATIONS

Insulation Resistance:	100MΩ at 100 V DC for 1 minute
Current Rating:	1A max. per contact
Voltage Rating:	100V ACrms max.
Withstanding Voltage:	500V AC for 1 minute
Contact Resistance:	50mΩ max. at20mV max. / 100mA max.

PART NUMBER

USB-M05-003

MATERIALS AND FINISH

Housing:	PA 6T, glass filled (UL94V-0)
Shell:	Copper Alloy, Tin over Cu
Contacts:	Copper Alloy
Contact Plating:	Solder area - Tin over Ni
	Mating area - Au Flash over 30μ“

FEATURES

- According to Hi-Speed USB standard, data transmission rate up to 480 Mbit / sec

OUTLINE DIMENSIONS SMT TYPE

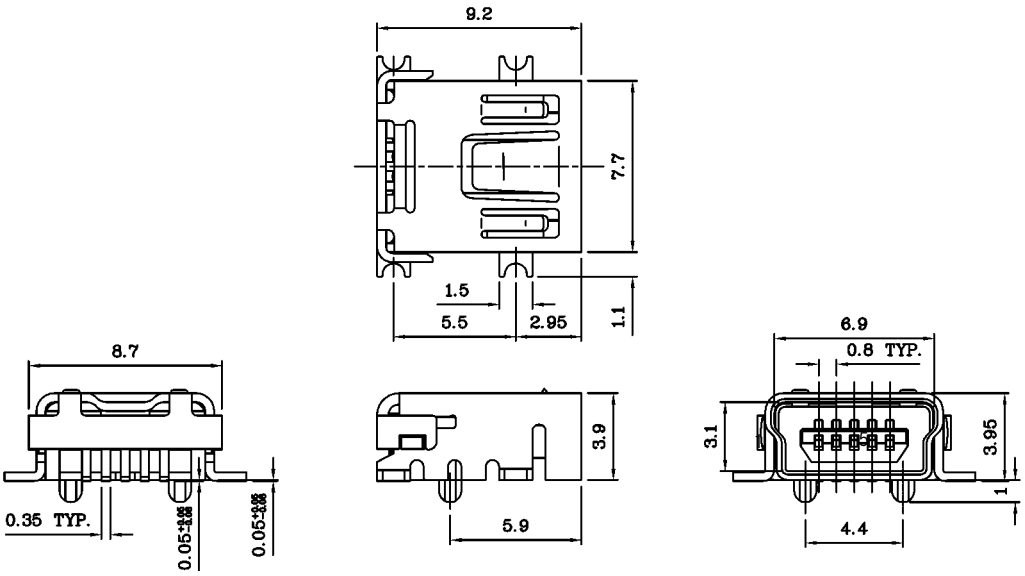

RECOMMENDED PCB LAYOUT

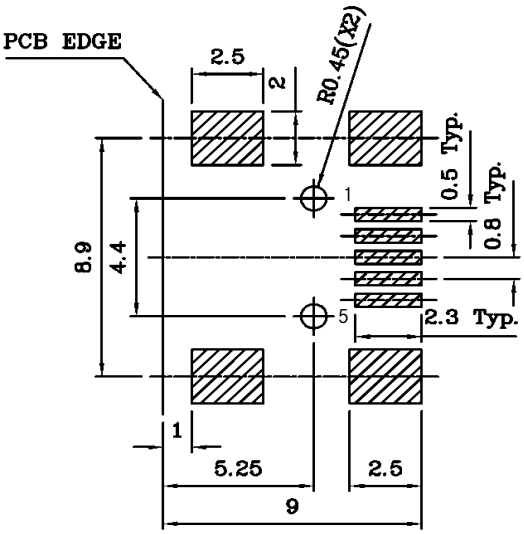

Top View

SPECIFICATIONS

Insulation Resistance:	100MΩ at 100 V DC for 1 minute
Withstanding Voltage:	100V AC for 1 minute
Voltage Rating:	30V ACrms max.
Current Rating:	1A max. per contact
Contact Resistance:	30mΩ max. at20mV max. / 100mA max.

PART NUMBER

USB-M05-P

Note:
USB-M05-P is only available in assembled versions with moulded strain relief.
For more details please contact Yamaichi.

MATERIALS AND FINISH

Shell:	Ni plated over Copper
Housing:	Thermoplastic, glass filled (UL94V-0)
Contacts:	Copper Alloy
Contact Plating:	Mating area - Au Flash over 30µ“

FEATURES

- Premating contacts to secure data protection when hot plug / unplug
- According to Hi-Speed USB standard, data transmission rate up to 480 Mbit / sec

OUTLINE DIMENSIONS PLUG

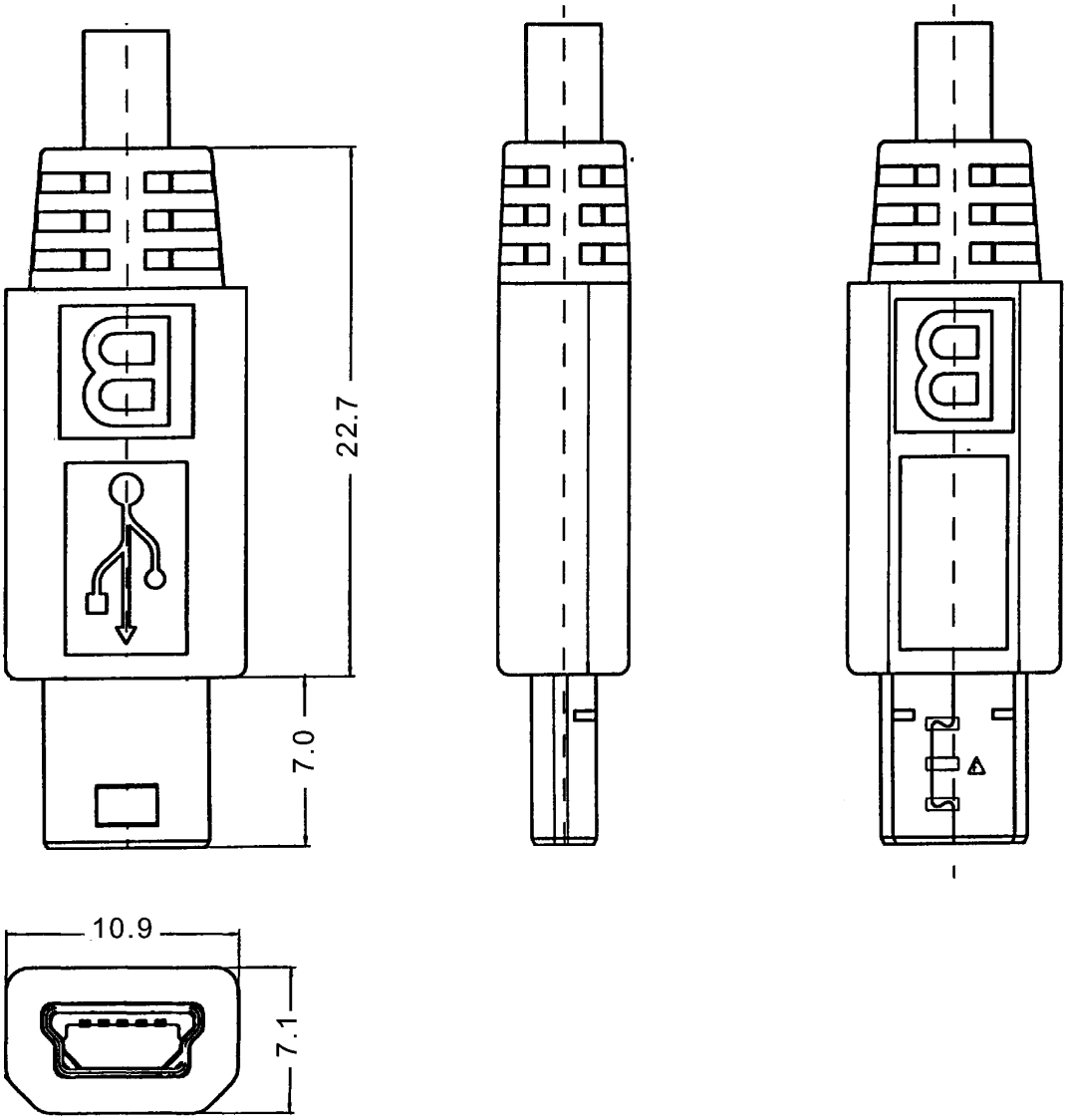

Trading Division

SPECIFICATIONS

Insulation Resistance:	1000MΩ at 100 V DC for 1 minute
Current Rating:	1A max. per contact
Voltage Rating:	30V ACrms max.
Withstanding Voltage:	500V AC (rms) for 1 minute
Contact Resistance:	30mΩ max. (initial)

PART NUMBER

USB-M04-003

MATERIALS AND FINISH

Housing:	Thermoplastic, glass filled (UL94V-0)
Shell:	Tin over Copper Alloy
Contacts:	Copper Alloy
Contact Plating:	Solder area - Solder over Nickel
	Mating area - Au over Nickel

OUTLINE DIMENSIONS SMT TYPE

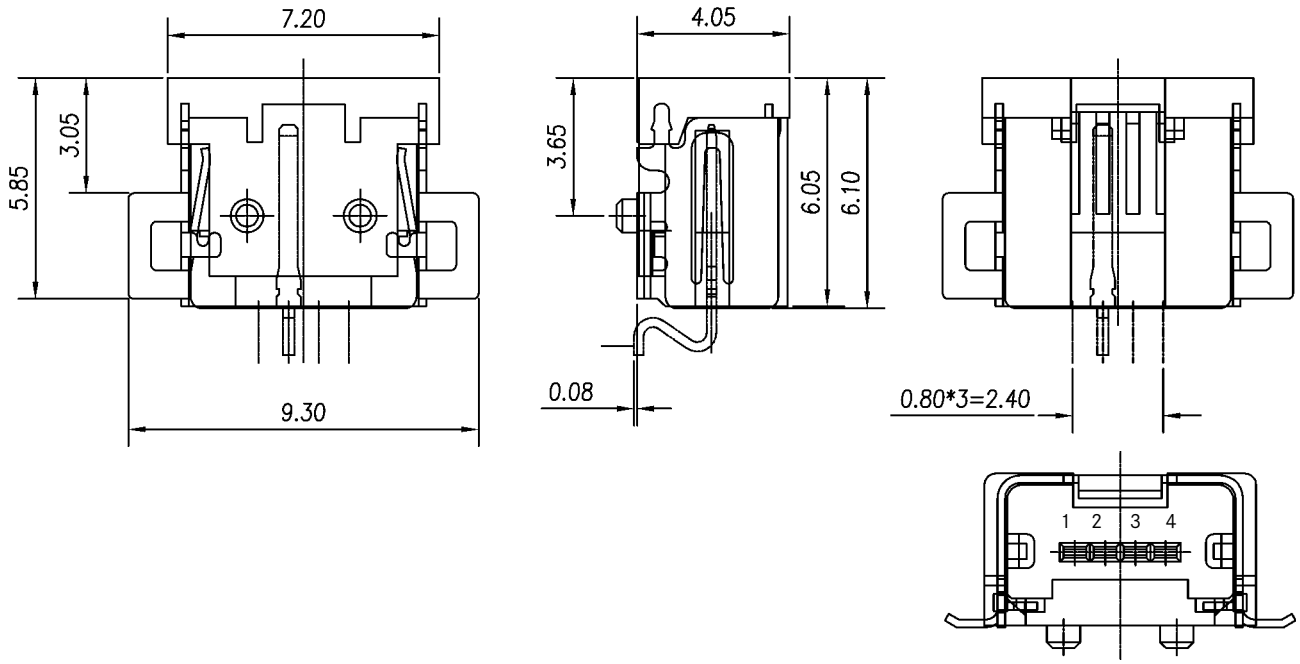

RECOMMENDED PCB LAYOUT

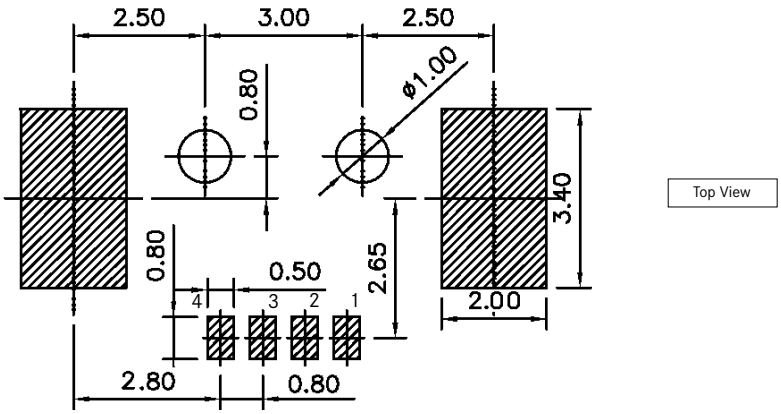

SPECIFICATIONS

Insulation Resistance:	1000MΩ at 100V DC for 1 minute
Withstanding Voltage:	500V ACrms for 1 minute
Voltage Rating:	30V AC (rms) max.
Current Rating:	1A max. per contact
Contact Resistance:	15mΩ max. (initial)

PART NUMBER

USB-M04-P

Assembly set with plastic cover

Note:
USB-M04-P is also available in assembled version with moulded strain relief.
For more details please contact Yamaichi.

MATERIALS AND FINISH

Housing:	Thermoplastic, glass filled (UL94V-0)
Shell:	Tin over Copper Alloy
Contacts:	Copper Alloy
Contact Plating:	Solder area - Sn over Nickel
	Mating area - Au over Nickel

OUTLINE DIMENSIONS PLUG

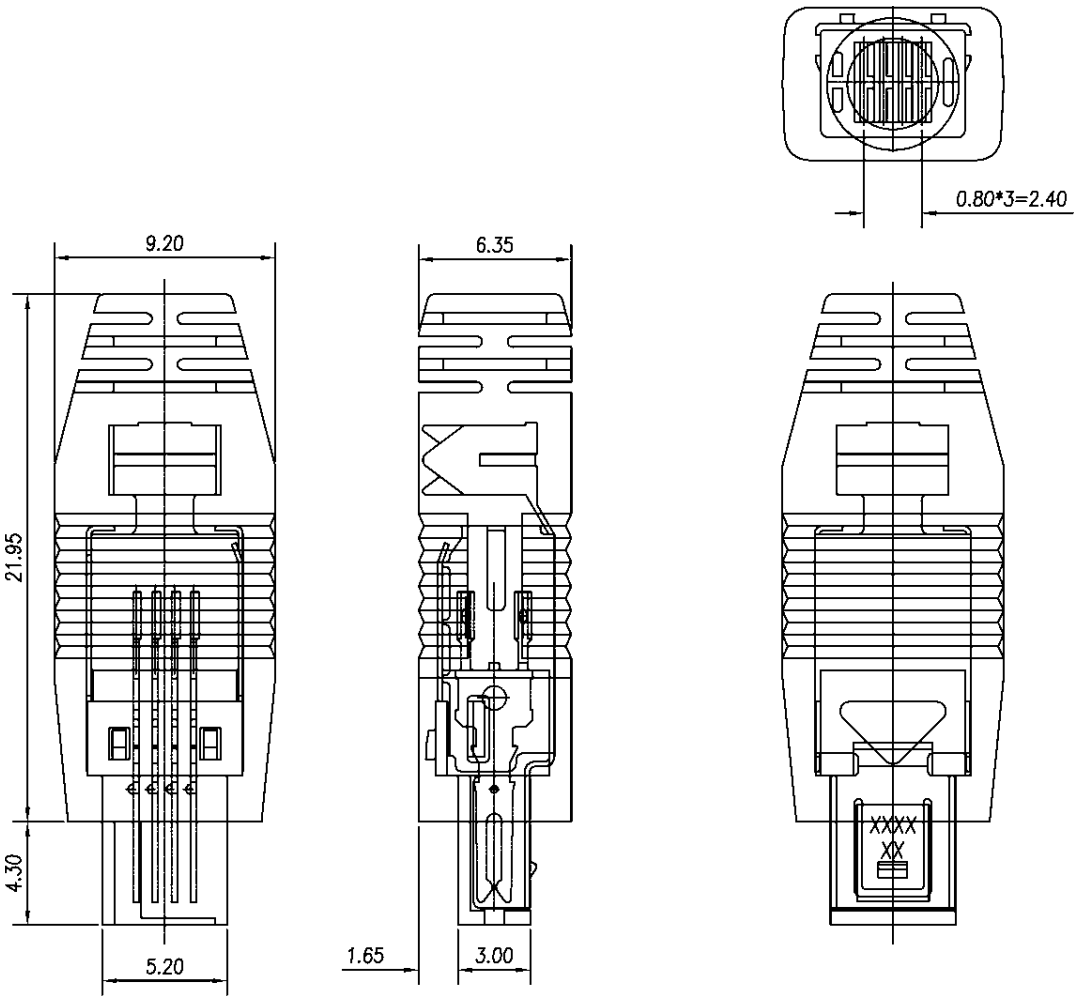

SPECIFICATIONS

Insulation Resistance:	100MΩ min.
Current Rating:	0.5A
Voltage Rating:	250V ACrms
Contact Resistance:	30mΩ max.
Withstanding Voltage:	100V AC for 1 minute
Operating Temp. Range:	-20°C to +80°C

PART NUMBER

USB-MC5-002

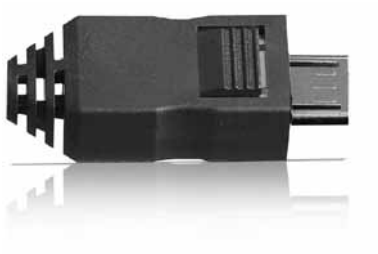

MATERIALS AND FINISH

Insulator and Cover:	Nylon-66 (UL94V-0)
Shell and Latch:	Stainless Steel
Contacts:	Phosphor Bronze, selective Gold Plated

OUTLINE DIMENSIONS FOR TYPE A

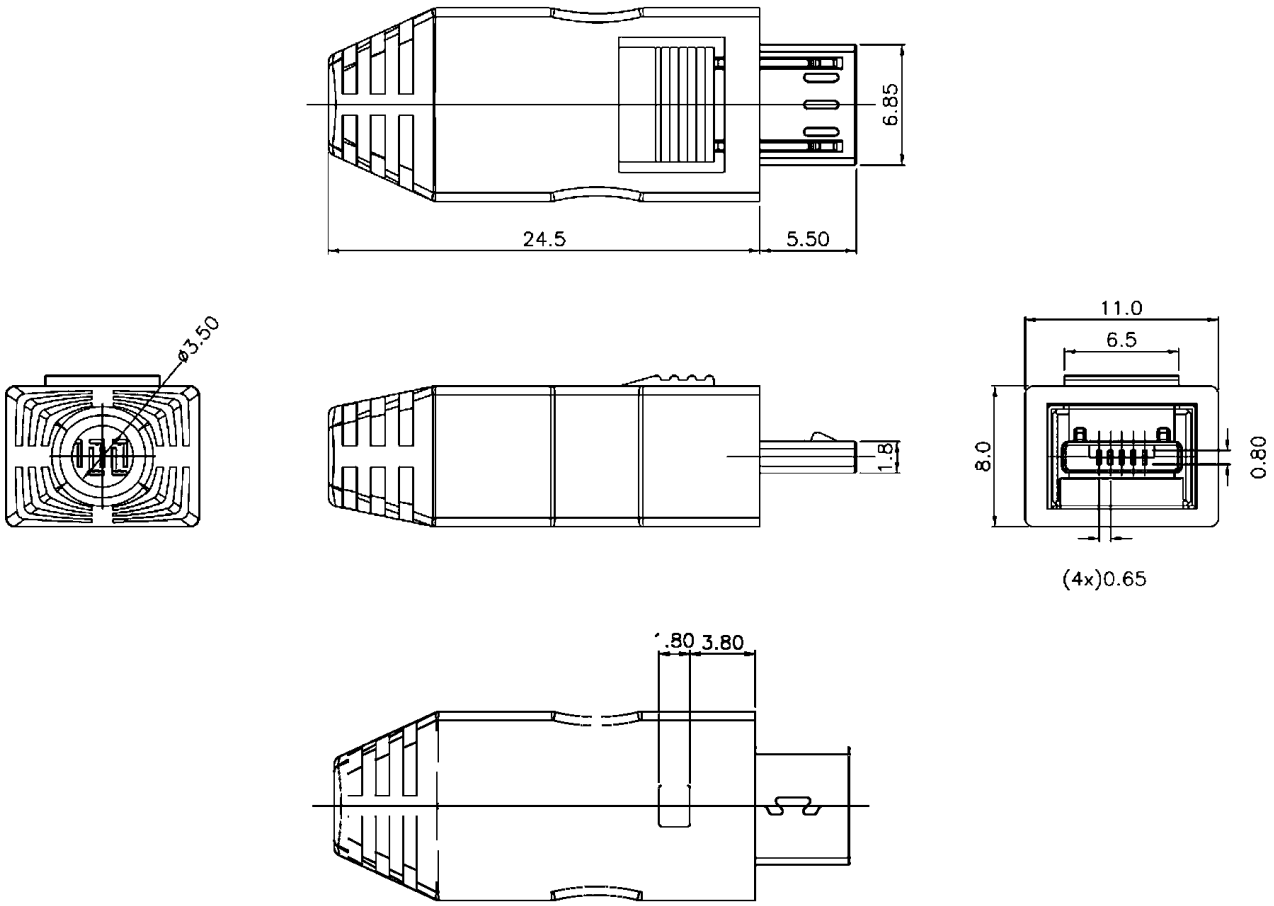

SPECIFICATIONS

Insulation Resistance:	100MΩ min.
Current Rating:	0.5A
Voltage Rating:	250V ACrms
Contact Resistance:	30mΩ max.
Withstanding Voltage:	100V AC for 1 minute
Operating Temp. Range:	-20°C to +80°C

PART NUMBER

USB-MC5-004

MATERIALS AND FINISH

Insulator:	LCP, (UL94V-0)
Shell:	Brass
Contacts:	Phosphor Bronze, selective Gold Plated

OUTLINE DIMENSIONS

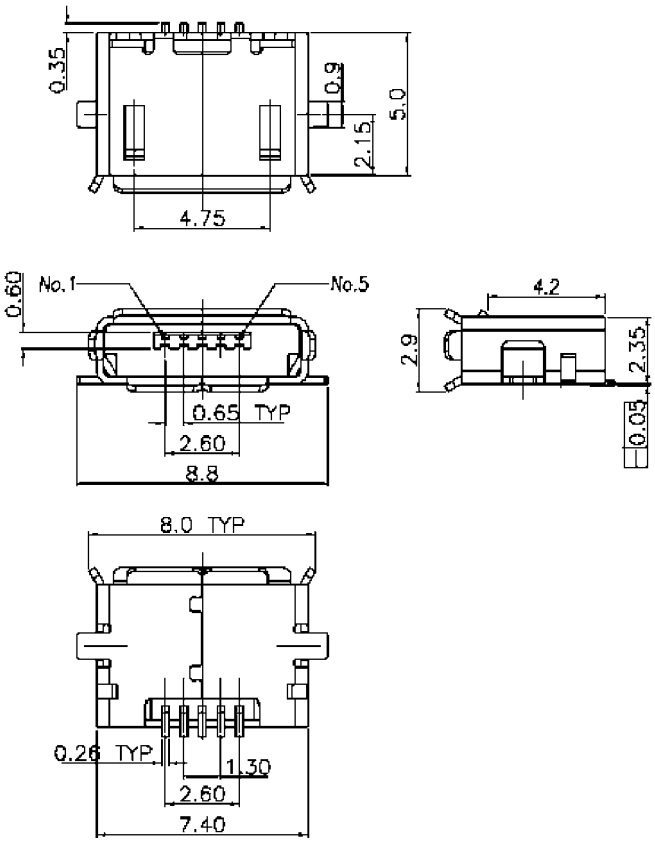

RECOMMENDED PCB LAYOUT (TYPE AB)

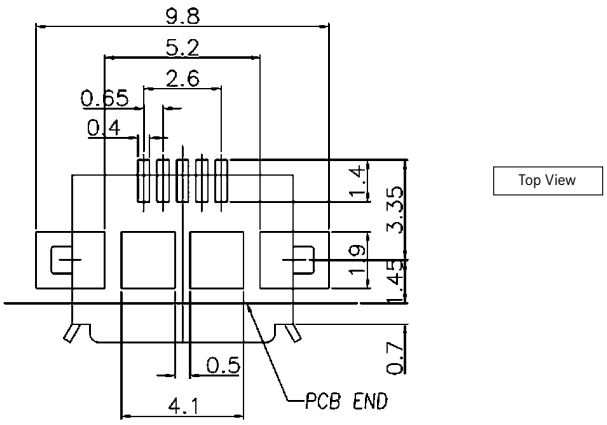

Trading Division

SPECIFICATIONS

Insulation Resistance:	100MΩ min.
Current Rating:	0.5A
Voltage Rating:	250V ACrms
Contact Resistance:	30mΩ max.
Withstanding Voltage:	100V AC for 1 minute
Operating Temp. Range:	-20°C to +80°C

PART NUMBER

USB-MC5-003

MATERIALS AND FINISH

Insulator:	LCP, (UL94V-0)
Shell:	Brass
Contacts:	Phosphor Bronze, selective Gold Plated

OUTLINE DIMENSIONS

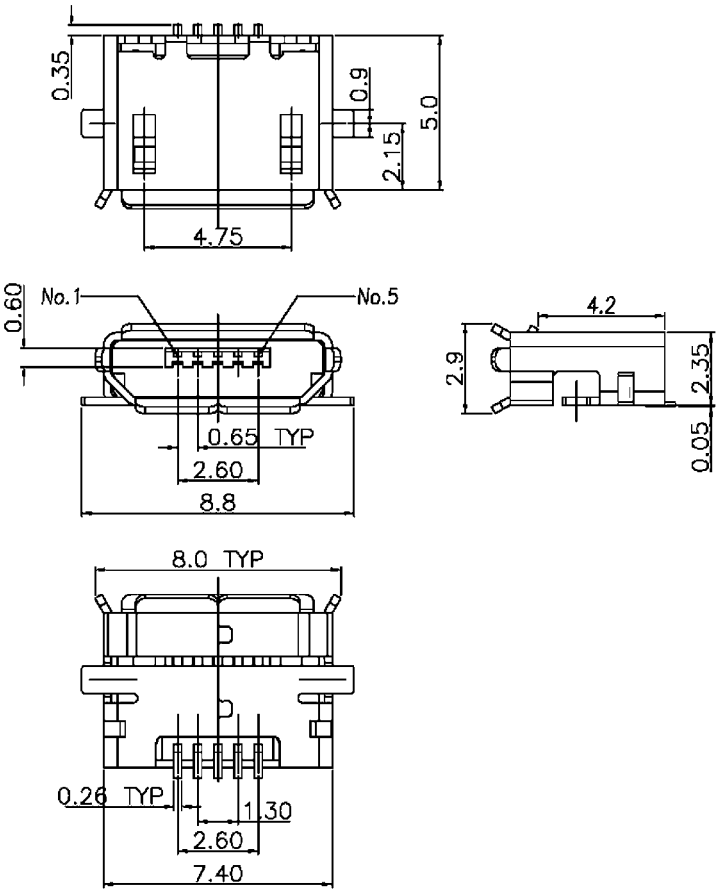

RECOMMENDED PCB LAYOUT (TYPE B)

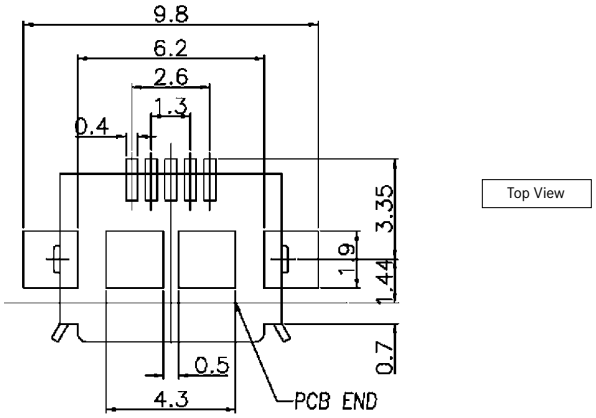

SERIES USB-MC5 MICRO USB, TYPE B - 5 PIN PLUG (SOLDER TYPE)

SPECIFICATIONS

Insulation Resistance:	100MΩ min.
Current Rating:	0.5A
Voltage Rating:	250V ACrms
Contact Resistance:	30mΩ max.
Withstanding Voltage:	100V AC for 1 minute
Operating Temp. Range:	-20°C to +80°C

PART NUMBER

USB-MC5-0010

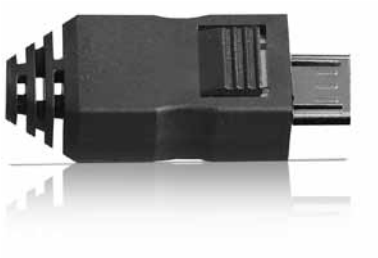

MATERIALS AND FINISH

Insulator and Cover:	Nylon-66 (UL94V-0)
Shell and Latch:	Stainless Steel
Contacts:	Phosphor Bronze, selective Gold Plated

OUTLINE DIMENSIONS TYPE B

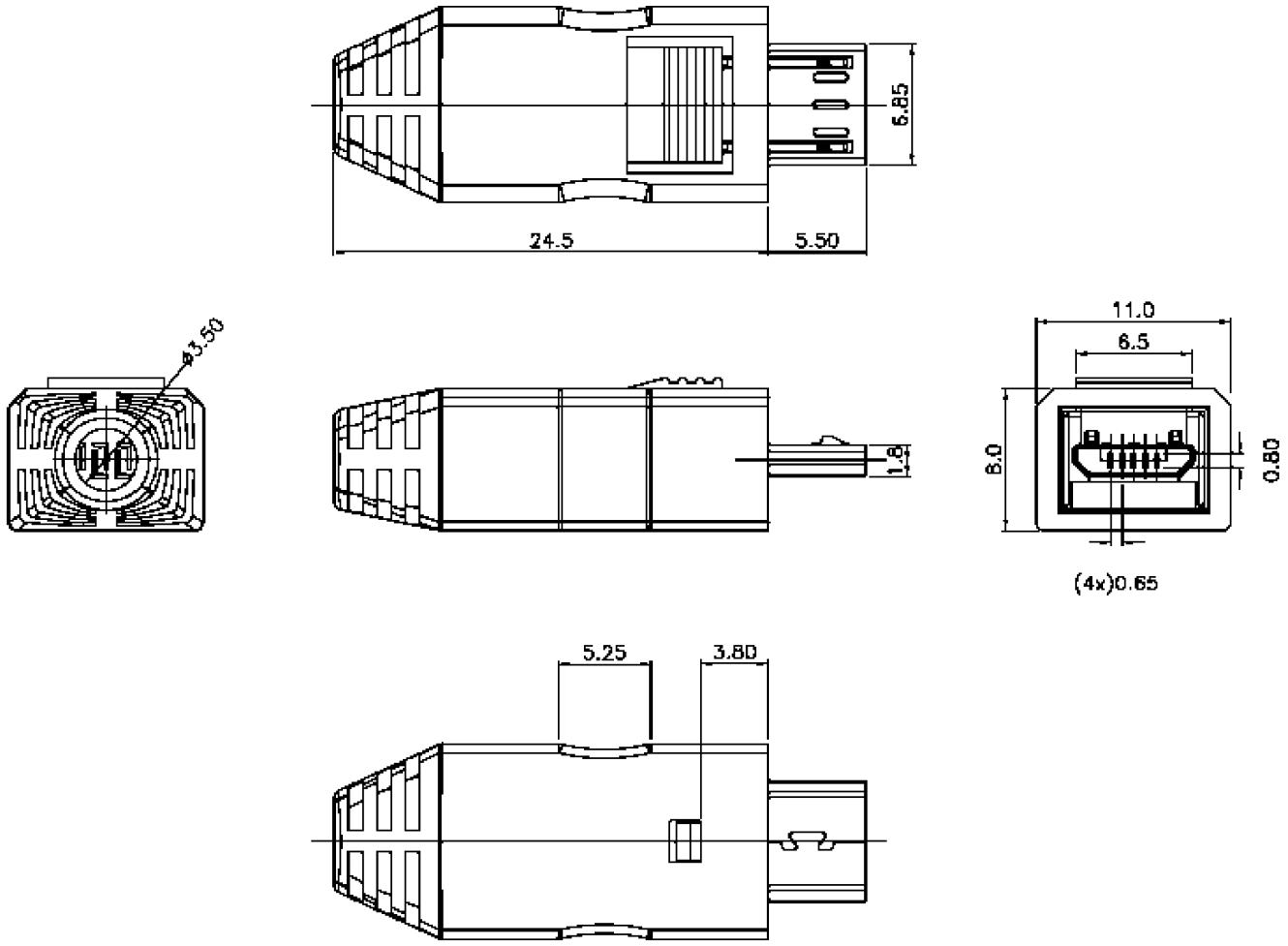

SPECIFICATIONS

Voltage Rating:	50V AC (rms) max.
Current Rating:	1A max. per contact
Contact Resistance:	30mΩ max.
Insulation Resistance:	100MΩ min.
Operating Temp. Range:	-55°C to +85°
Withstanding Voltage:	500V DC min.
Pin Count:	6 pins
Mating Cycles:	1,500 times

PART NUMBER

GBS006-0003-AS
(Receptacle)

CTGBPC**
(Plug)

Note:
Minimum order quantity = 1000 meters

Only availablein assembled versions with moulded strain relief.
For more details please contact Yamaichi.

MATERIALS AND FINISH

	Plug	Receptacle
Shell:	PVC (Moulded) (UL94V-0)	
Metal Shell:	SPC 0.4t Sn-plating	Copper Alloy, Sn-plating
Housing:	PBT, (GF), black (UL94V-0)	High Temperature Thermoplastic, UL94V-0
Contacts:	Brass 0.3t	Copper Alloy
Contact Area:	30μ"Gold over Nickel	30μ"Gold over Nickel
Terminal Area:	Sn over Nickel	Sn over Nickel

OUTLINE DIMENSIONS RECEPTACLE

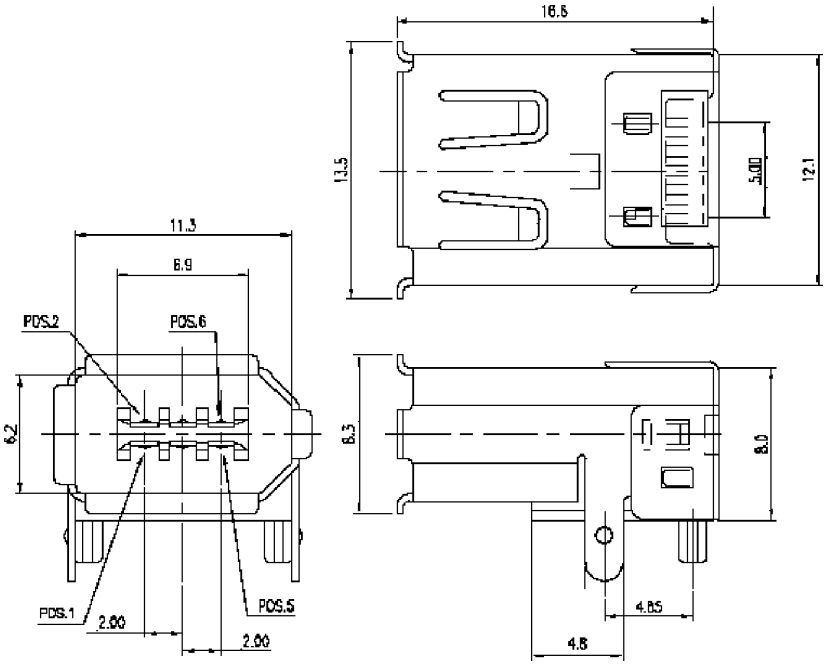

RECOMMENDED PCB LAYOUT

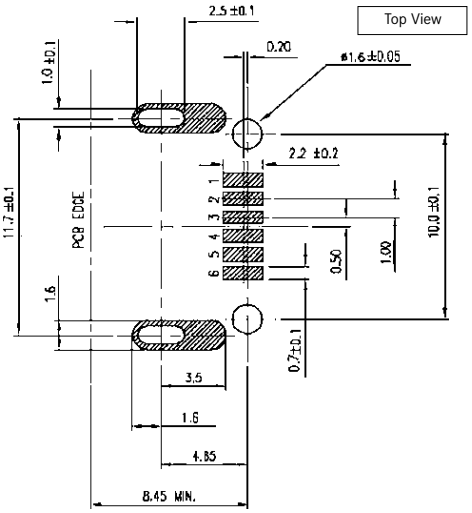

OUTLINE DIMENSIONS PLUG

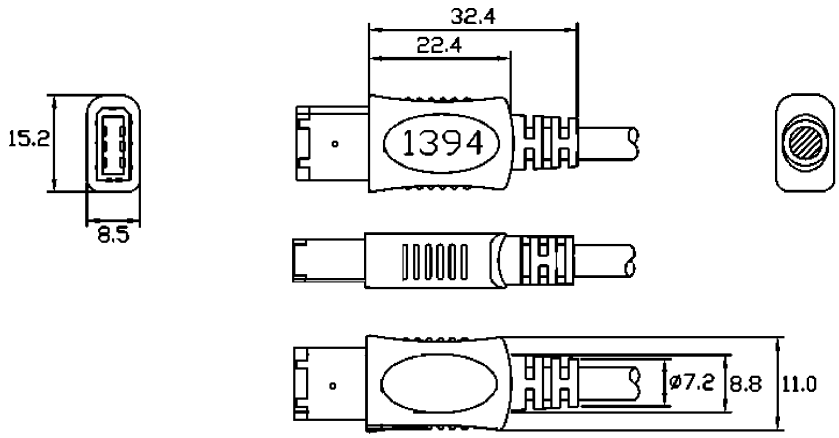

INPUT/OUTPUT CONNECTORS - USB AND IEEE

Trading Division

SPECIFICATIONS

Insulation Resistance:	100MΩ min.
Current Rating:	0.5A min.
Voltage Rating:	40V AC
Withstanding Voltage:	500V AC
Contact Resistance:	30mΩ max.
Operating Temp. Range:	-55°C to +125°C
Solder Temperature:	220°C / 60 sec., 250°C peak

PART NUMBER

HDMI-019-S9-AL - TYPE *

Series No.

3 = Type 3
4 = Type 4

MATERIALS AND FINISH

Housing:	LCP, UL94V-0 rated (black)
Contacts:	Brass
Shield:	Brass, Tin plated over Ni
Contact Plating:	Solder area - Sn over Ni
	Mating area - 30µ" Au over Ni

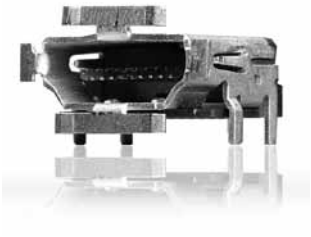

FEATURES

- With lock springs for secure mating

OUTLINE DIMENSIONS FOR TYPE 3

HDMI-019-S9-AL-Type3

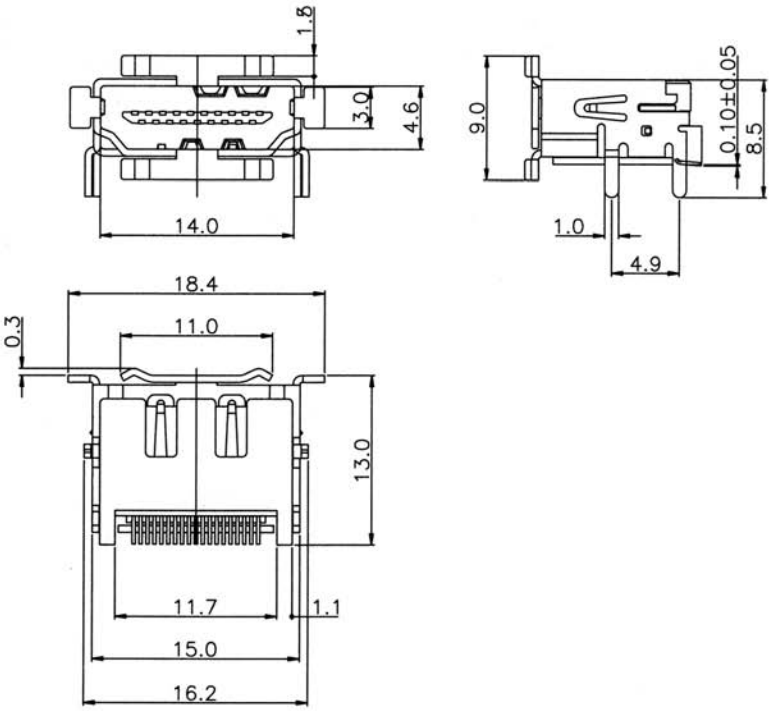

OUTLINE DIMENSIONS FOR FLANGE TYPE 4

HDMI-019-S9-AL-Type4

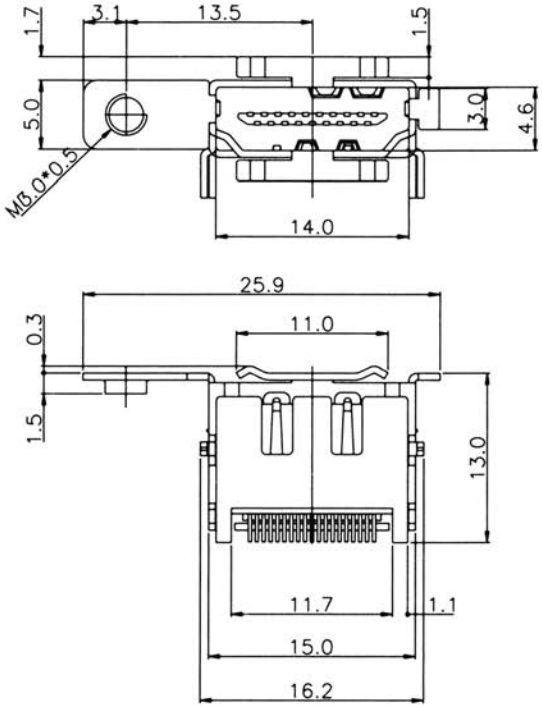

RECOMMENDED PCB LAYOUT

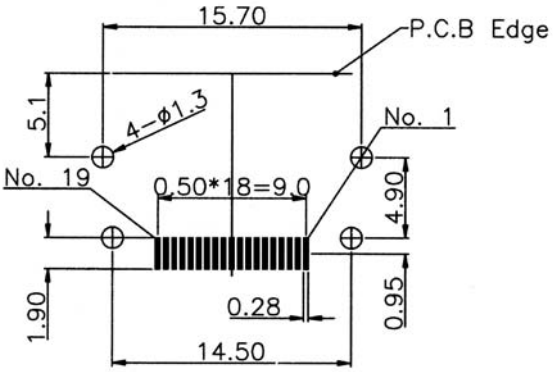

Top View

Trading Division

SPECIFICATIONS

Insulation Resistance:	100MΩ min.
Current Rating:	0.5A min.
Voltage Rating:	40V AC
Withstanding Voltage:	500V AC
Contact Resistance:	30mΩ max.
Operating Temp. Range:	-55°C to +125°C
Solder Temperature:	220°C / 60 sec., 250°C peak

PART NUMBER

HDMI-019-S9-AL-TYPE5 *

Series No.

Unmarked = Without Flange
F = With Flange

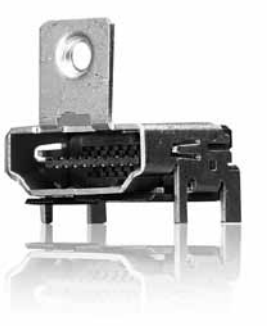

MATERIALS AND FINISH

Housing:	LCP, UL94V-0 rated (black)
Contacts:	Brass
Shield:	Brass, Tin plated over Ni
Contact Plating:	Solder area - Sn over Ni
	Mating area -30µ" Au over Ni

FEATURES

- With lock springs for secure mating

OUTLINE DIMENSIONS

HDMI-019-S9-AL-Type5

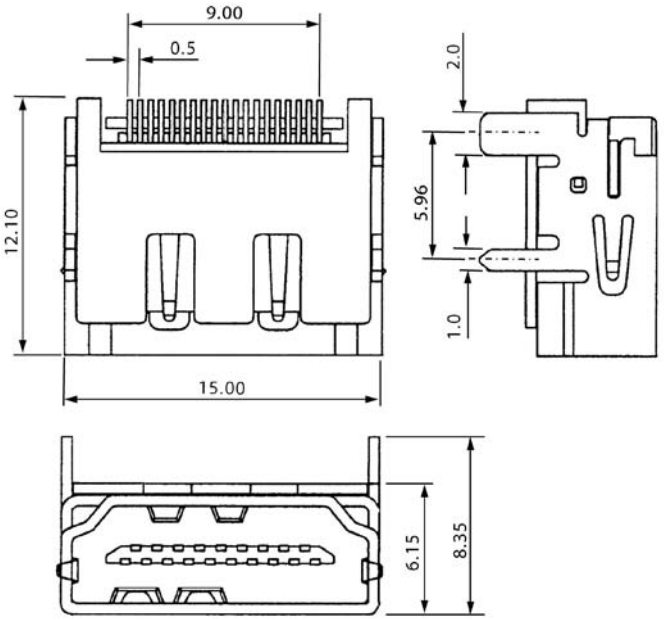

OUTLINE DIMENSIONS FOR FLANGE TYPE

HDMI-019-S9-AL-Type5F

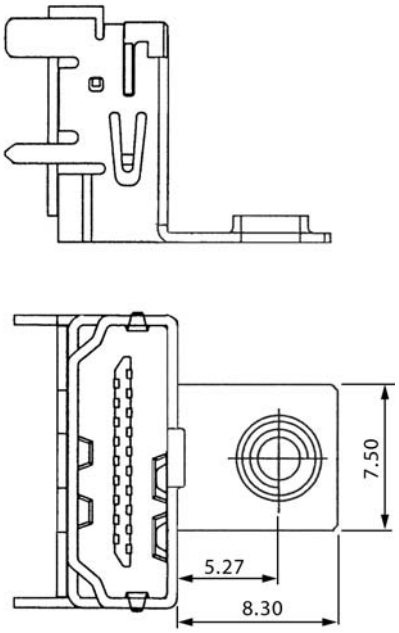

RECOMMENDED PCB LAYOUT

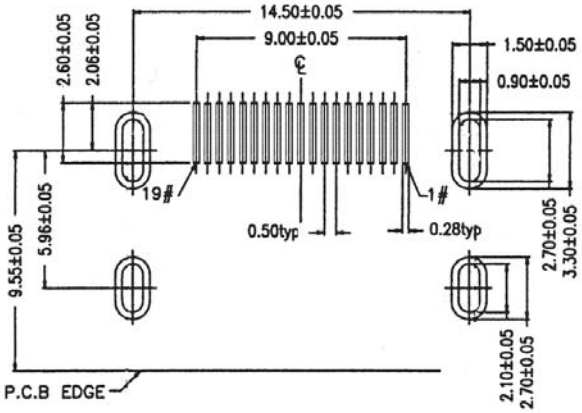

Top View

SPECIFICATIONS

Insulation Resistance:	2,000MΩ min.
Current Rating:	1.5A
Voltage Rating:	250V AC rms
Withstanding Voltage:	500V
Contact Resistance:	20mΩ max.
Operating Temp Range:	-55°C to +85°C
Soldering Temp.:	230°C / 3 sec.

MATERIALS AND FINISH

Housing:	High temp. Thermoplastic (UL94V-0)
Contacts:	Phosphor Bronze 0.30µm Au over Ni
Solder Area:	Tin over Ni
Shell:	Zinc Alloy, Ni Plated
Metal Board Lock:	Zinc Alloy, Tin Plated

PART NUMBER

DVIS 0**T - 002 - B S *

- Series (Socket)
- Number of Leads
  24 (Digital), 29 (Integrated)
- Terminal Type: 90° Solder Dip
- Mating Face Contacts - Au (0.3µm min.) over Ni
- Solder Terminals - Tin over Ni
- Tapping Dimensions:
  No mark = Thread Rivet UNC 4-40
  1= Hex. Nut UNC 4-40

OUTLINE SOCKET DIMENSIONS (INTERGRATED)

29 Leads

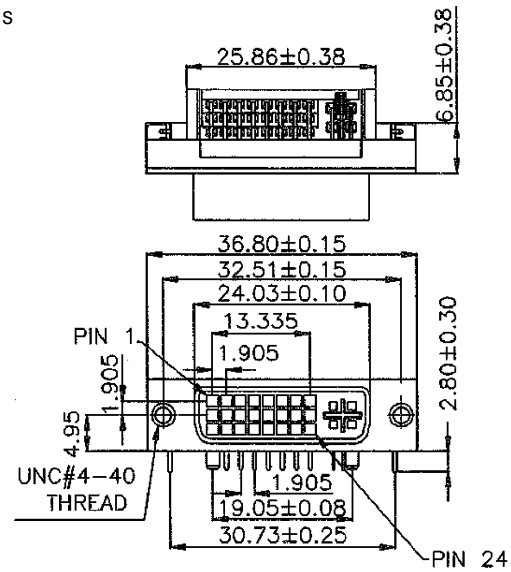

OUTLINE SOCKET DIMENSIONS (DIGITAL)

24 Leads

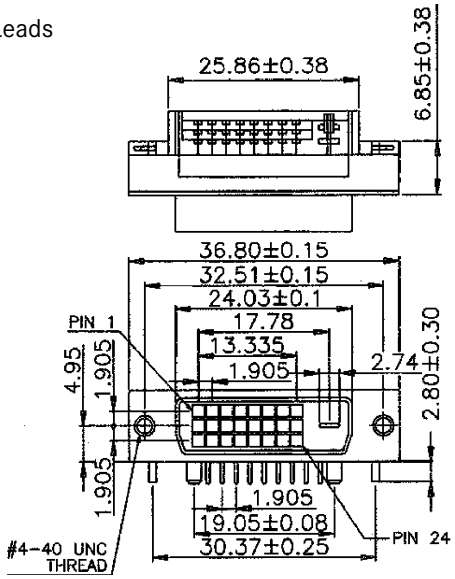

PCB LAYOUT

29 Leads

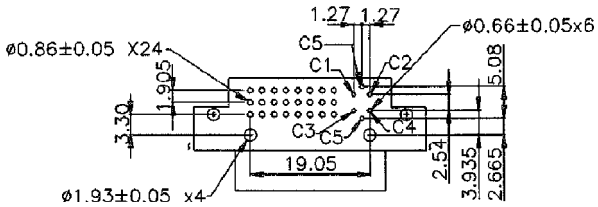

PCB LAYOUT

24 Leads

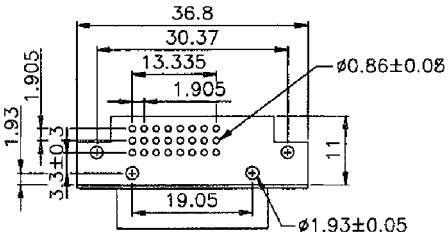

TAPPING TYPES

DVIS0**T- 002- BS

Thread Rivet UNC 4-40

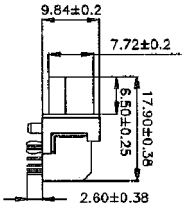

DVIS0**T- 002- BS1

Hex. Nut UNC 4-40

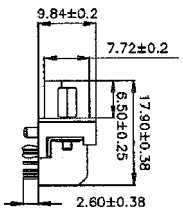

Trading Division

SPECIFICATIONS

Insulation Resistance:	2,000MΩ min.
Current Rating:	1.5A
Voltage Rating:	250V AC rms
Withstanding Voltage:	500V
Contact Resistance:	20mΩ max.
Operating Temp Range:	-55°C to +85°C
Soldering Temp.	230°C / 3 sec.

MATERIALS AND FINISH

Housing:	High temp. Thermoplastic (UL94V-0)
Contacts:	Phosphor Bronze 0.30μm Au over Ni
Solder Area:	Tin over Ni
Shell:	Zinc Alloy, Ni Plated
Metal Board Lock:	Zinc Alloy, Tin Plated

PART NUMBER

DVIS 0**T - 004 - B S *

- Series (Socket)
- Number of Leads 24 (Digital) 29 (Integrated)
- Terminal Type: 180° Solder Dip
- Mating Face Contacts - Au (0.3μm min.) over Ni
- Solder Terminals - Tin over Ni
- Tapping Dimensions: No mark = Thread Rivet UNC 4-40; 1= Hex. Nut UNC 4-40

OUTLINE SOCKET DIMENSIONS (INTERGRATED)

29 Leads

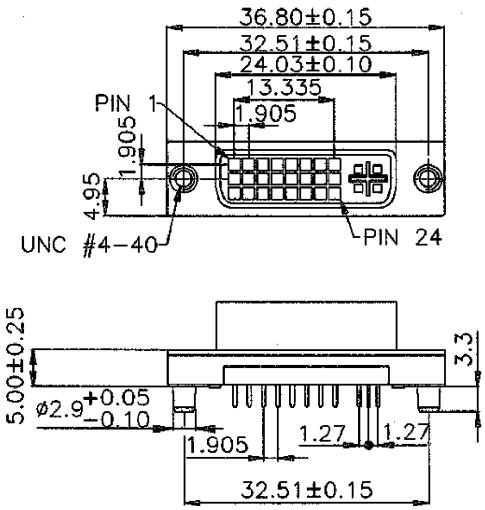

OUTLINE SOCKET DIMENSIONS (DIGITAL)

24 Leads

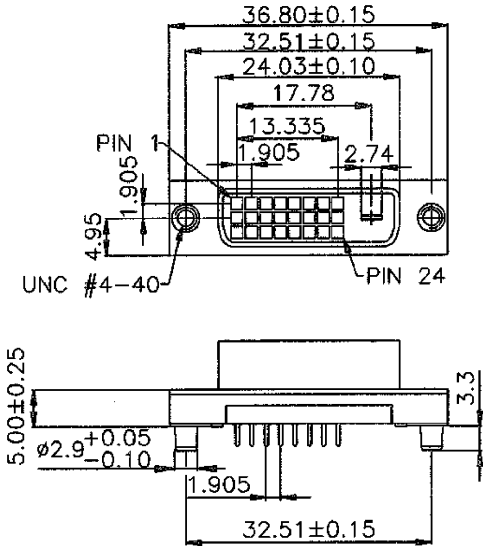

PCB LAYOUT

29 Leads

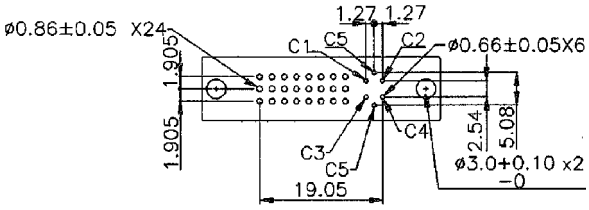

PCB LAYOUT

24 Leads

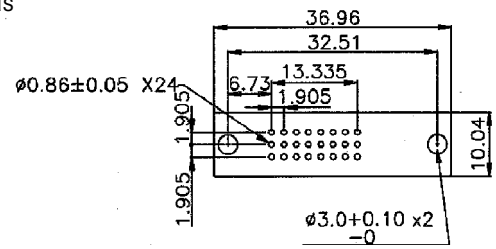

TAPPING TYPES

DVIS0**T- 004- BS

Thread Rivet UNC 4-40

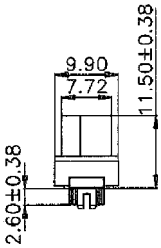

DVIS0**T- 004- BS1

Hex. Nut UNC 4-40

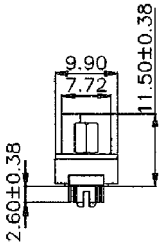

SPECIFICATIONS AND DRAWINGS ARE SUBJECT TO ALTERATION WITHOUT PRIOR NOTICE - DIMENSIONS IN MILLIMETER

SPECIFICATIONS

Insulation Resistance:	1,000MΩ minimum
Current Rating:	1.5A, 40VAC
Withstanding Voltage:	500V
Contact Resistance:	20mΩ max.
Mating Force:	4.5Kg max.
Unmating Force:	1Kg min. / 3Kg Max.

MATERIALS AND FINISH

Housing:	High temp. Thermoplastic (UL94V-0)
Contacts:	Phosphor Bronze 0.30µm Au over Ni
Solder Area:	Sn over Ni

FEATURES

- Integrated DVI adapter with 12digital plus 5 analog signals for PC, graphic cards with RGB interfaces (analog signals)
- Digital DVI adapter with 18 digital plus 1 ground signal for use with digital interfaces

PART NUMBER

DVIP 012+5 / VGA15 S - G

- Series (plug)
- Pin Count (Digital Signals)
- Pin Count (Analog Sig.)
- Series Name
- Pin Count
- Socket
- Cover (grey)

DVIP 018+1 / VGA15 S - G

- Series (plug)
- Pin Count (Digital Signals)
- Pin Count (Analog Sig.)
- Series Name
- Pin Count
- Socket
- Cover (grey)

Trading Division

SPECIFICATIONS

Insulation Resistance:	1,000MΩ minimum
Current Rating:	1.5A, 40VAC
Withstanding Voltage:	500V
Contact Resistance:	20mΩ max.
Mating Force:	4.5Kg max.
Unmating Force:	1Kg min. / 3Kg max.

PART NUMBER

CT DVIP 0** / DVIP 0** - *

- CT: Cable Assembly
- DVIP: DVI Plug Moulded Type
- 0**: Pin Counts: 24 and 29
- DVIP: DVI Plug Moulded Type
- 0**: Pin Counts: 24 and 29
- *: Length in mm (L ±50 see drawing below)

MATERIALS AND FINISH

Contacts:	Phosphor Bronze 0.30μm Au over Ni
Solder Area:	Sn over Ni

FEATURES

- Pin counts available 24 and 29

INFO: minimum order = 1,000 meters

OUTLINE PLUG DIMENSIONS

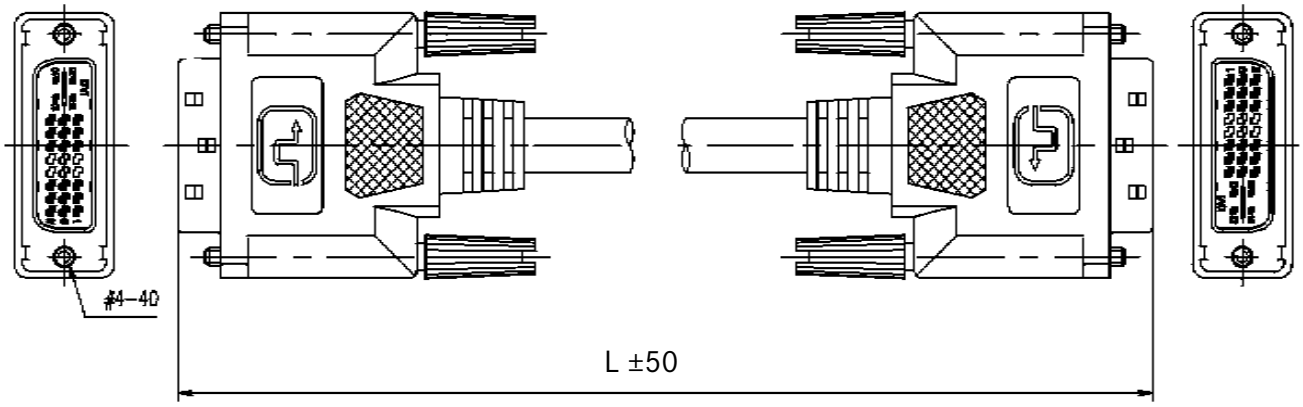

DVI-A/D	DVI-A/D	CABLE FUNCTION
PIN 1	PIN 1	TMDS DATA 2-
PIN 2	PIN 2	TMDS DATA 2+
PIN 3	PIN 3	TMDS DATA 2
PIN 6	PIN 6	DDC CLOCK
PIN 7	PIN 7	DDC DATA
PIN 8	PIN 8	VERTICAL SYNC.
PIN 9	PIN 9	TMDS DATA 1-
PIN 10	PIN 10	TMDS DATA 1+
PIN 11	PIN 11	TMDS DATA 1
PIN 14	PIN 14	POWER +5V
PIN 15	PIN 15	GROUND(+5V & HV SYNC.)
PIN 16	PIN 16	HOT PLUG DETECT
PIN 17	PIN 17	TMDS DATA 0-
PIN 18	PIN 18	TMDS DATA 0+
PIN 19	PIN 19	TMDS DATA 0
PIN 22	PIN 22	TMDS CLOCK SHIELD
PIN 23	PIN 23	TMDS CLOCK+
PIN 24	PIN 24	TMDS CLOCK-
C1	C1	ANALOG RED
C2	C2	ANALOG GREEN
C3	C3	ANALOG BLUE
C4	C4	HORIZONTAL SYNC.
C5	C5	ANALOG GROUND
SHIELD	SHIELD	OUTER SHIELD

SPECIFICATIONS

Insulation Resistance:	1,000MΩ min.
Current Rating:	1.5A
Voltage Rating:	5V AC
Withstanding Voltage:	500V AC
Contact Resistance:	15mΩ max.
Operating Temp. Range:	-55°C to +125°C
Solder Temperature:	245°C / 10 sec.

PART NUMBER

SAS - 029 - DIP - AL

MATERIALS AND FINISH

Housing:	LCP, UL94V-0 rated
Contacts:	Phosphor Bronze
Contact Plating:	Solder area - Sn over Ni
	Mating area - 30μ" Au over Ni

FEATURES

- With lock springs for secure mating
- Various other SAS and SATA connectors are available on request

OUTLINE DIMENSIONS

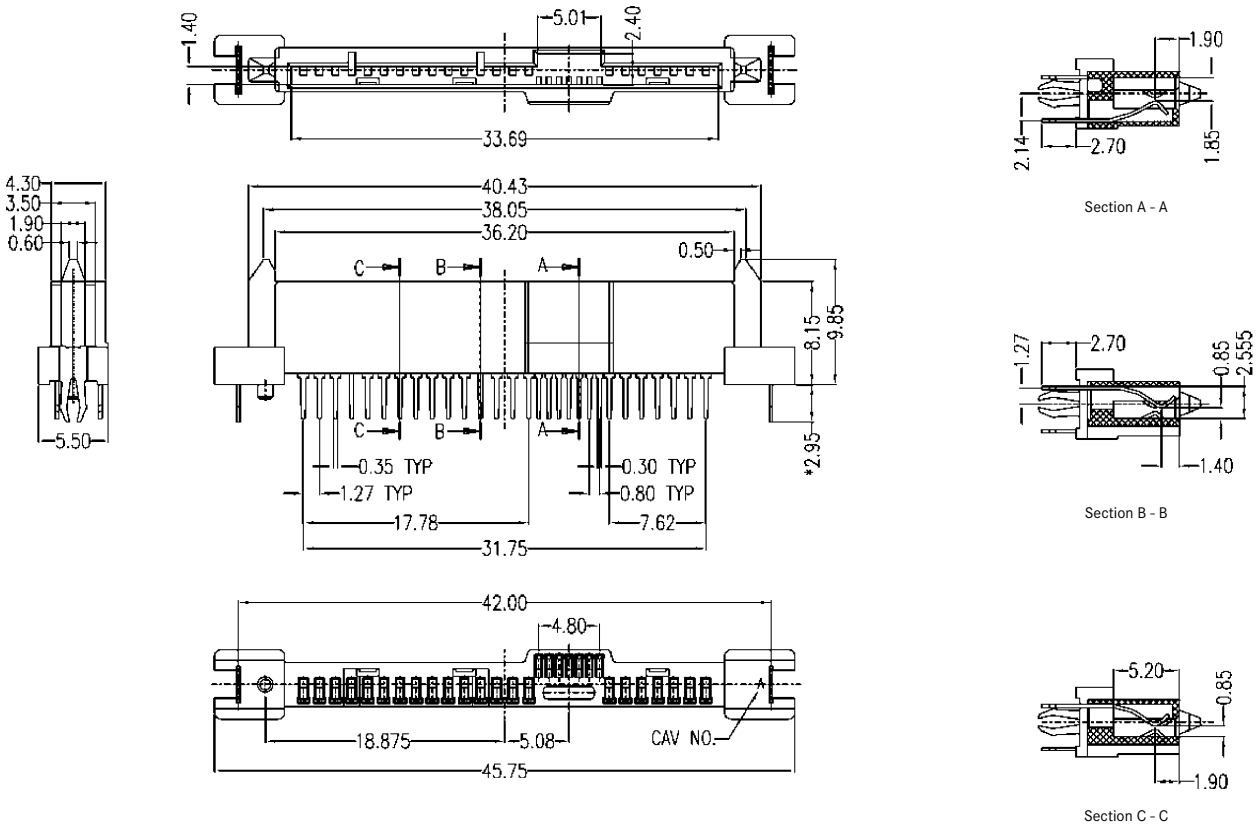

RECOMMENDED PCB LAYOUT

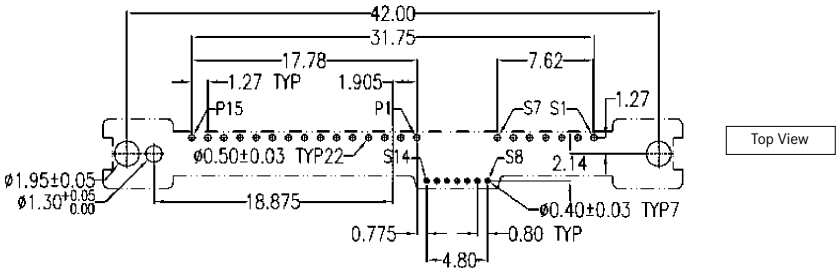

Trading Division

SPECIFICATIONS

Insulation Resistance:	1,000MΩ min.
Current Rating:	1.5A
Voltage Rating:	5V AC
Withstanding Voltage:	500V AC
Contact Resistance:	15mΩ max.
Operating Temp. Range:	-55°C to +125°C
Solder Temperature:	245°C / 10 sec.

PART NUMBER

SAS - 029 - SMT/DIP - AL

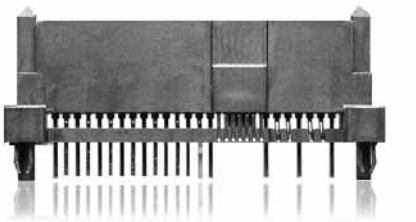

MATERIALS AND FINISH

Housing:	LCP, UL94V-0 rated
Contacts:	Phosphor Bronze
Contact Plating:	Solder area - Sn over Ni
	Mating area - 30μ" Au over Ni

FEATURES

- With lock springs for secure mating
- Various other SAS and SATA connectors are available on request

OUTLINE DIMENSIONS

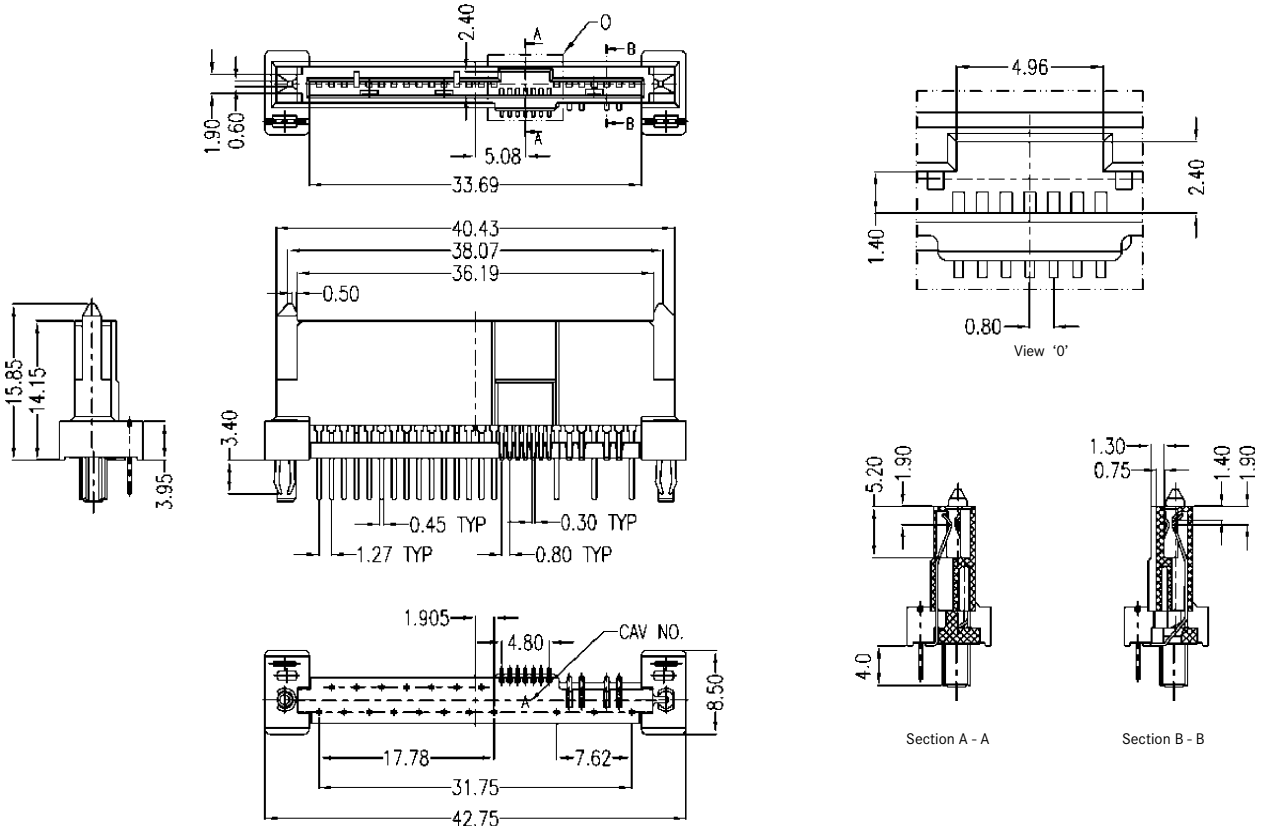

RECOMMENDED PCB LAYOUT

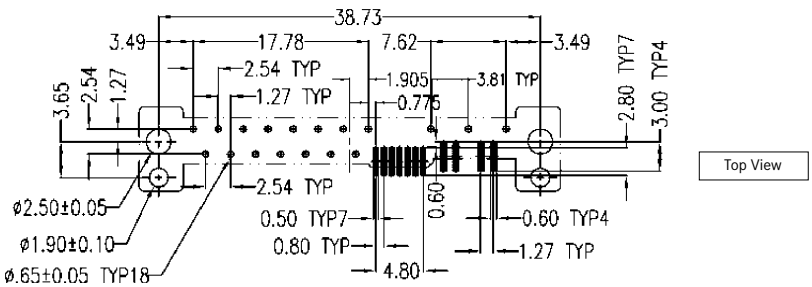

SPECIFICATIONS

Insulation Resistance:	500MΩ min.
Withstanding Voltage:	250V ACrms for 1 minute
Contact Resistance:	35mΩ max.
Current Rating:	1A
Operating Temp. Range:	–55°C to +105°C

MATERIALS AND FINISH

Housing:	PBT with glass fiber
Contacts:	Phosphor Bronze
Plating:	Mating Face - Au over Nickel
	IDC Terminals - Solder over Nickel

FEATURES

- Half pitch interface connectors with SCSI-II pin type contacts
- Low cost due to plastic insulator housing

PART NUMBER

NHP 068T - 000 - BS

- Series (socket)
- No. of Leads
  Terminal Type: 0 = IDC for Flat Cable
- Contact Plating:
  - B = Mating Face Cont.- Au (15µ") over Ni
  - S = IDC Terminals - Solder over Ni

APPLICABLE CABLES

0.635mm pitch flat cable, AWG 30 (7/0.1) stranded wire.
(e.g. FLEX-*2*, see Section Cables)

OUTLINE PLUG DIMENSIONS

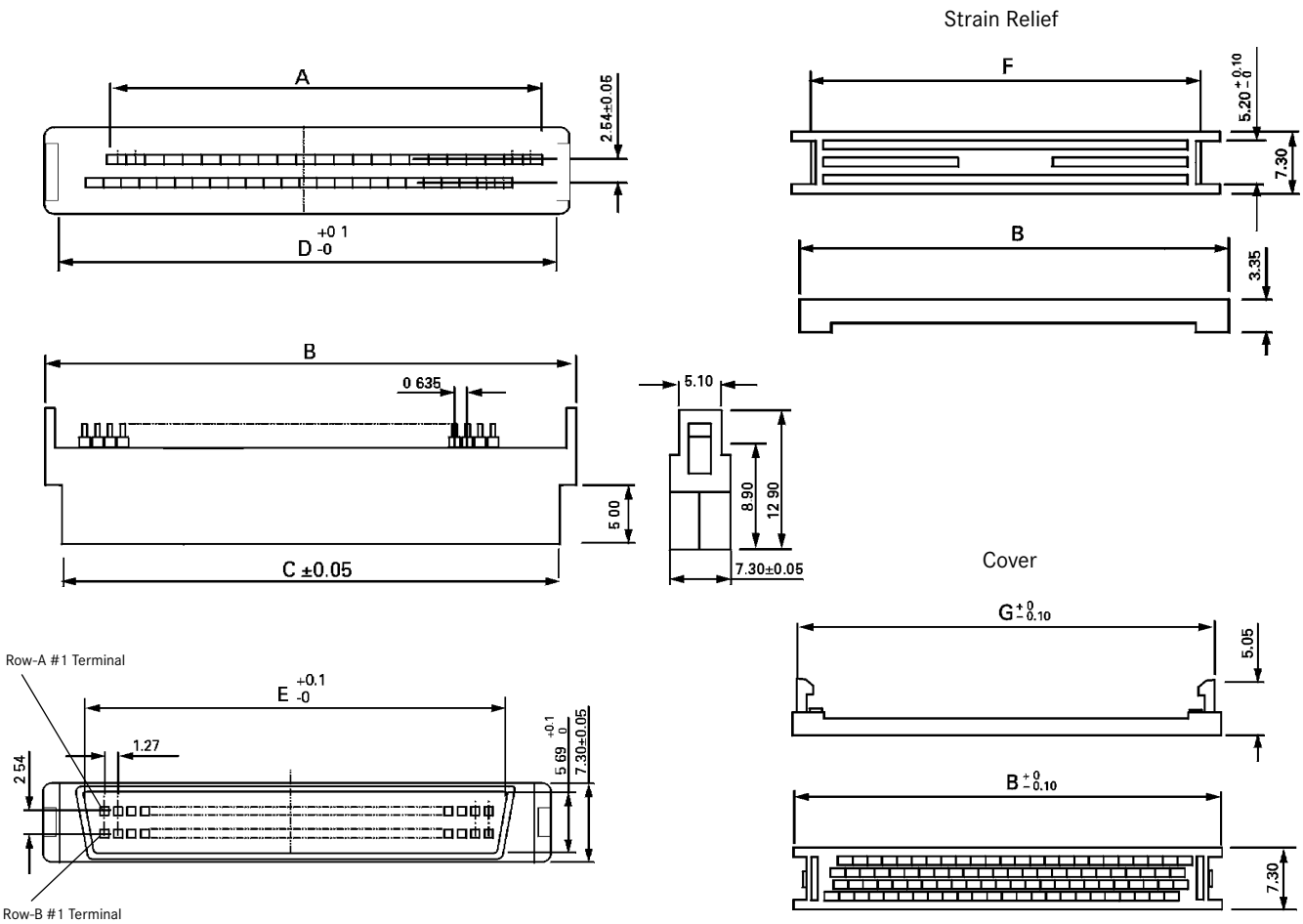

Part Number	No. of Leads	A	B	C	D	E	F	G
NHP050T-000-BS	50	30.48	40.07	36.22	37.87	34.85	35.67	37.77
NHP068T-000-BS	68	41.91	51.50	63.88	49.30	46.13	47.10	49.20

SPECIFICATIONS

Insulation Resistance:	500MΩ min.
Withstanding Voltage:	250V ACrms for 1 minute
Contact Resistance:	35mΩ max.
Current Rating:	1A
Operating Temp. Range:	-55°C to +105°C

MATERIALS AND FINISH

Housing:	PBT (glass filled), UL94V-0
Contacts:	Phosphor Bronze
Plating:	Mating Face - Gold over Nickel
	IDC Terminals - Solder over Nickel

FEATURES

- Half pitch interface connector with SCSI-II pin type contacts

PART NUMBER

NHS 068T - 000 - BS *

- Series (socket)
- No. of Leads
- Terminal Type: 0 = IDC for Flat Cable
- Contact Plating:
  B = Mating Face Cont.- Au (15µ") over Ni
  S = IDC Terminals - Solder over Ni
- Tapping Dimensions:
  0 = 4-40UNC 1 = 2-56 UNC with Latch Block

APPLICABLE CABLES

0.635mm pitch flat cable, AWG 30 (7/0.1) stranded wire.
(e.g. FLEX-*2*, see Section Cables)

OUTLINE SOCKET DIMENSIONS

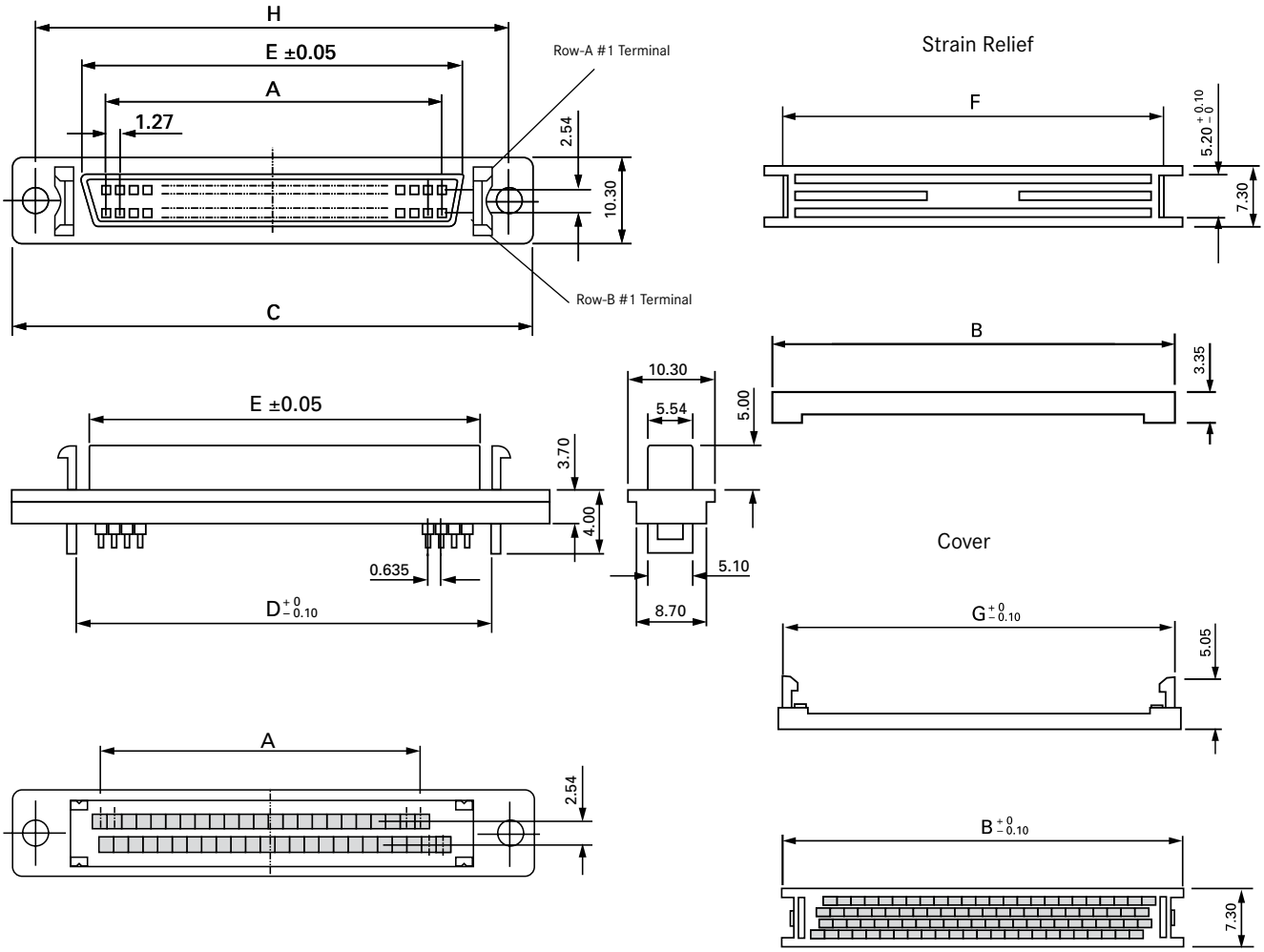

Part Number	No. of Leads	A	B	C	D	E	F	G	H
NHS068T-000-BS*	68	41.91	51.50	63.88	49.30	46.13	47.10	49.20	57.91

SPECIFICATIONS

Insulation Resistance:	500MΩ min.
Withstanding Voltage:	250V ACrms for 1 minute
Contact Resistance:	35mΩ max.
Current Rating:	1A
Operating Temp. Range:	–55°C to +105°C

MATERIALS AND FINISH

Housing:	PBT (glass filled), UL94V-0
Contacts:	Phosphor Bronze
Plating:	Mating Face - Gold over Nickel
	IDC Terminals - Solder over Nickel

FEATURES

- Half pitch interface connector with SCSI-II pin type contacts

PART NUMBER

NHS 068T3 - 000 - BS *

- Series (socket)
- No. of Leads
- Terminal Type: 0 = IDC for Flat Cable
- Contact Plating:
  B = Mating Face Contacts- Au (15μ") over Ni
  S = IDC Terminals - Solder over Ni
- Tapping Dimensions: 0 = 4-40 UNC 1 = 2-56 UNC

APPLICABLE CABLES

0.635mm pitch flat cable, AWG 30 (7/0.1) stranded wire.
(e.g. FLEX-*2*, see Section F)

OUTLINE SOCKET DIMENSIONS

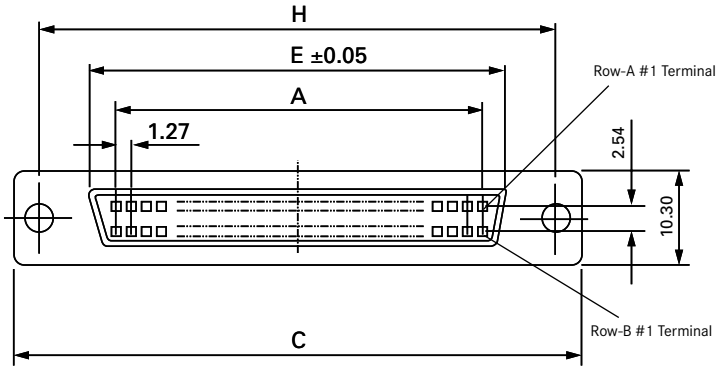

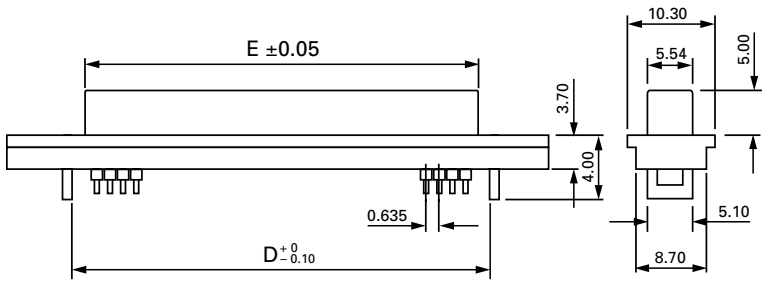

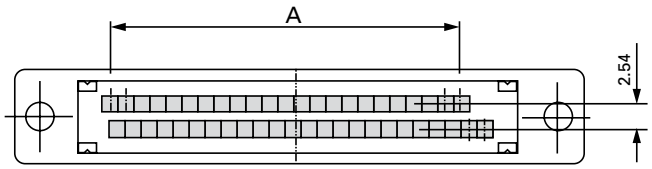

STRAIN RELIEF

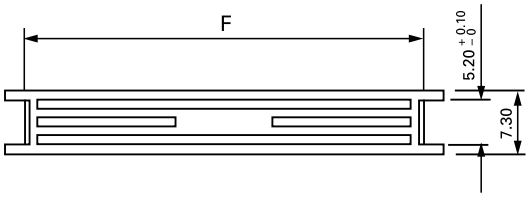

COVER

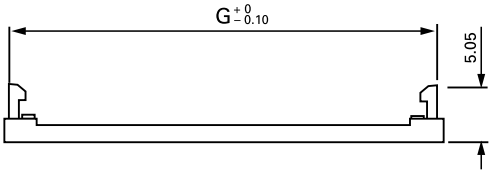

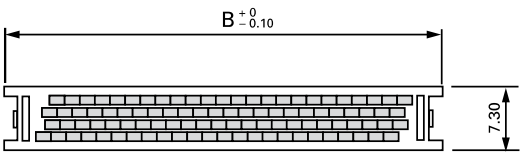

Part Number	No. of Leads	A	B	C	D	E	F	G	H
NHS068T3-000-BS*	68	41.91	51.50	63.88	49.30	46.13	47.10	49.20	57.91

SPECIFICATIONS

Insulation Resistance:	500MΩ min. at 500V DC
Withstanding Voltage:	500V ACrms for 1 minute
Contact Resistance:	35mΩ max. at 10mA
Current Rating:	0.5A
Operating Temp. Range:	-55°C to +85°C

MATERIALS AND FINISH

Housing:	PBT (glass filled), UL94V-0 rated
Contacts:	Copper Alloy
Plating:	Mating Face - Au over Ni
	IDC Terminals - Flash Au over Ni

FEATURES

- 1.27mm pitch interface connectors with bellows type contacts

PART NUMBER

NCP 050 - 0 * 0 - BF

- Series (plug)
- No. of Leads
- 2 = IDC for Flat Cable (36 and 50 leads only)
  3 = IDC for Discrete Wire
- Connection Type: 0 = IDC
- Contact Plating:
  B = Mating Face Contacts - Au (0.3µm min.) over Ni
  F = IDC Terminals - Flash Au over Ni

OUTLINE PLUG DIMENSIONS

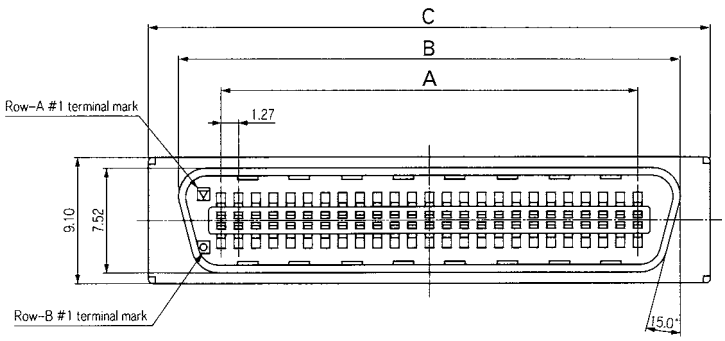

APPLICABLE CABLES (for e.g. see Cable Section)

NCP0**-020-BF: 1.27mm pitch flat cable.
Stranded wire AWG 28 (7/0.127),
cable outer diameter 0.8 to 1.1mm
e.g. SFX-S*, DK**

NCP0**-030-BF: Discrete wire.
Stranded wire: AWG 28 (7/0.127),
insulation outer diameter 0.8 to 1.1mm
e.g. 7/0.127* UL20276*

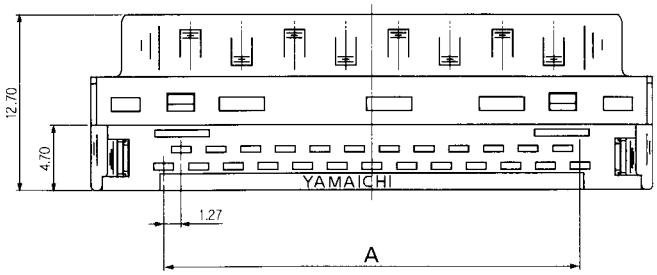

CONTACT DETAILS

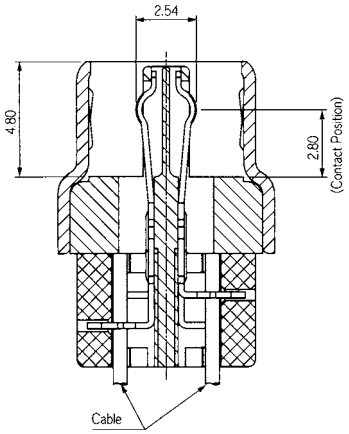

Part Number	No. of Leads	A	B	C
NCP036-020-BF	36	21.59	27.80	32.20
NCP036-030-BF	36	21.59	27.80	32.20
NCP050-020-BF	50	30.48	36.60	41.10
NCP050-030-BF	50	30.48	36.60	41.10

SPECIFICATIONS

Insulation Resistance:	500MΩ min. at 500V DC
Withstanding Voltage:	500V ACrms for 1 minute
Contact Resistance:	35mΩ max. at 10mA
Current Rating:	0.5A
Operating Temp. Range:	-55°C to +85°C
Soldering Temp.:	260°C / 5 sec.

MATERIALS AND FINISH

Housing:	PBT (glass filled), UL94V-0 rated
Contacts:	Copper Alloy
Plating:	Mating Face - Au over Ni
	Solder Terminals - Flash Au over Ni

FEATURES

- 1.27mm pitch interface connectors with bellows type contacts
- Bellows type contacts ensure low insertion and extracting forces, contact protection from deformation and contact stability

PART NUMBER

NCS 050Z - 022 - D F (01)

- Series (socket)
- No. of Leads
- PCB Lock Type: 2 = Hook Lock
- Terminal Type: 2 = 90° Solder Dip
- Mating Face Contact Plating: D = Au (0.2μm min.) over Nickel
- Solder Terminal Plating: F = Flash Au over Nickel

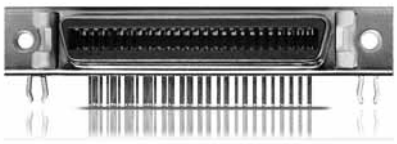

OUTLINE SOCKET DIMENSIONS

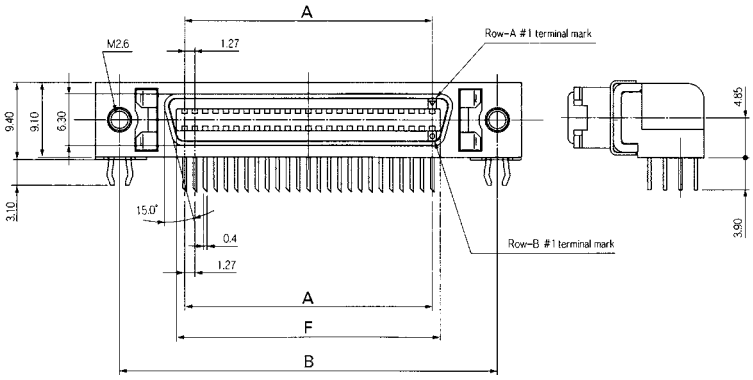

RECOMMENDED PCB LAYOUT

For leads 50

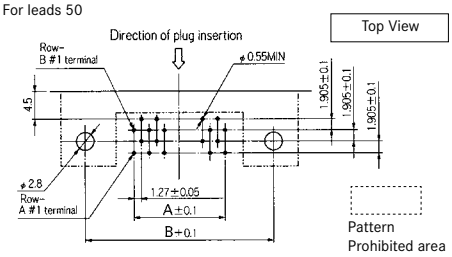

For leads 20, 36 and 68

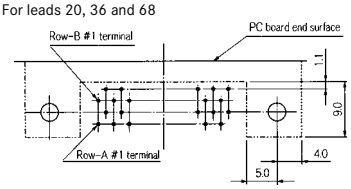

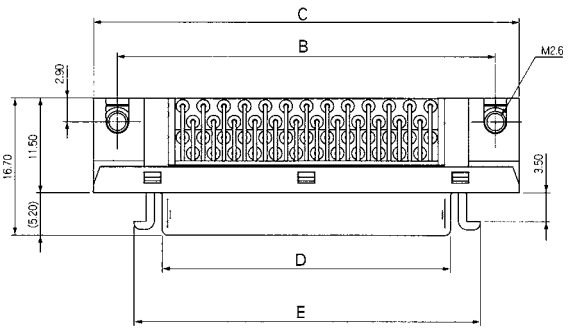

PCB-LOCKING

Details

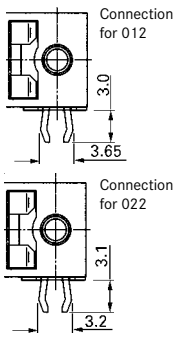

CONTACT DETAILS

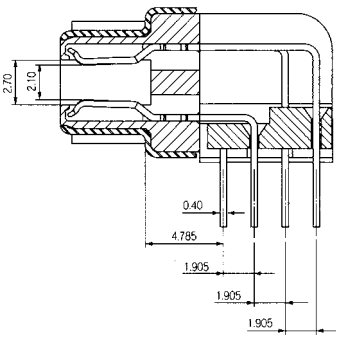

Part Number	No. of Leads	A	B	C	D	E	F	G
NCS020Z-022-DF (01)	20	11.43	27.45	33.35	16.43	23.35	13.43	20.76
NCS036Z-022-DF (01)	36	21.59	37.61	43.51	26.59	33.51	23.59	27.11
NCS050Z-022-DF (01)	50	30.48	46.50	52.40	35.48	42.40	32.48	36.00

SPECIFICATIONS

Insulation Resistance:	500MΩ min. at 500 V DC
Withstanding Voltage:	500V ACrms for 1 minute
Contact Resistance:	35mΩ max. at 10mA
Current Rating:	0.5A
Operating Temp. Range:	-55°C to +85°C
Soldering Temp.:	260°C / 5 sec.

MATERIALS AND FINISH

Housing:	PBT (glass filled),UL94V-0 rated
Contacts:	Copper Alloy
Plating:	Mating Face - Au over Ni
	Solder Terminals - Flash Au over Ni

FEATURES

- 1.27mm pitch interface connector with bellows type contacts
- Bellows type contacts ensure low insertion and extracting forces, contact protection from deformation and contact stability

PART NUMBER

NCS 036 - D 002 - K13289

- Series
- No. of Leads
- Dual Port
- 2 = 90° Solder Dip
- Design No.: with Snap-in Board Locking, M2.5 Tapping

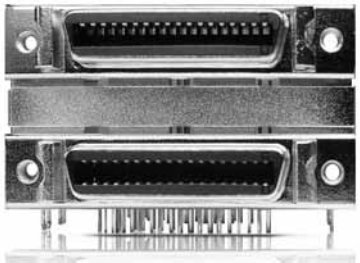

OUTLINE SOCKET DIMENSIONS

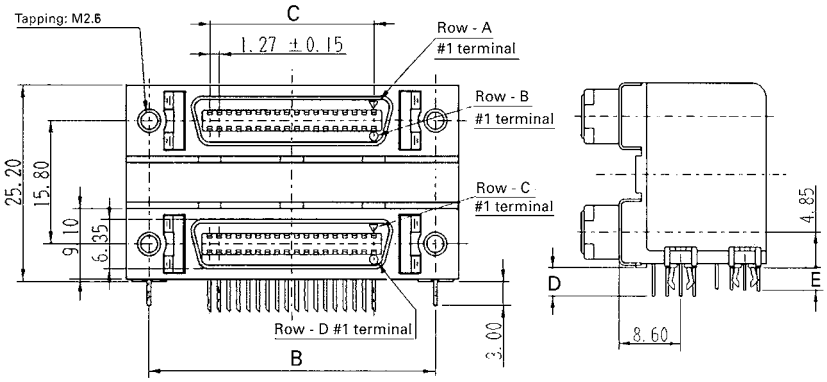

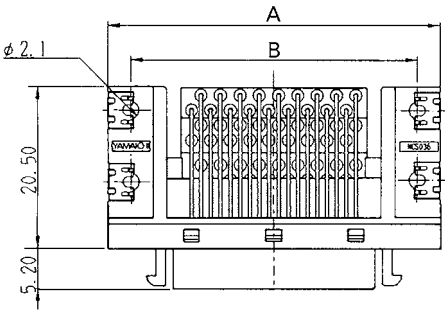

CONTACT DETAILS

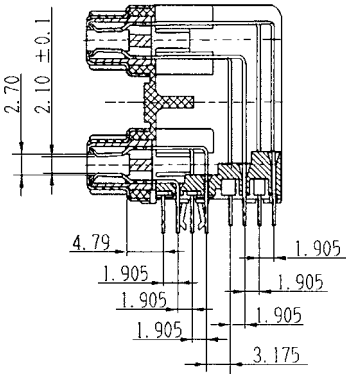

RECOMMENDED PCB LAYOUT

Pattern
Prohibited area

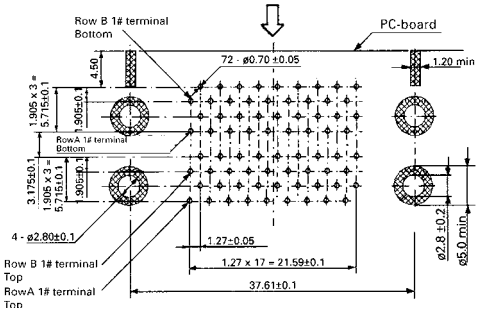

Top View

Part Number	No. of Leads	A	B	C	D	E
NCS036-D002-K13289	2 x 36	43.51	37.61	21.59	3.40	2.60

90° / 180° SOLDER DIP TYPES FOR SCSI-2 (NH SERIES) AND MINI DELTA RIBBON (NC SERIES)

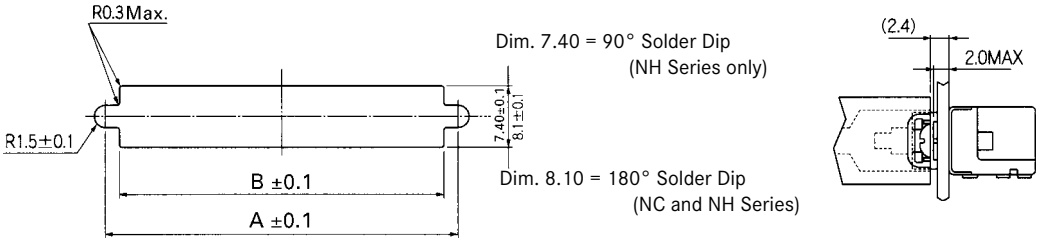

No. of Leads	A	B
20	27.45	23.75
26	31.26	27.56
36	37.61	33.91
50	46.50	42.80
68	57.93	54.23

Information
Maximium panel thickness of 2.0mm must not be exceeded when using washers

FOR SCSI-3 (NH SERIES)

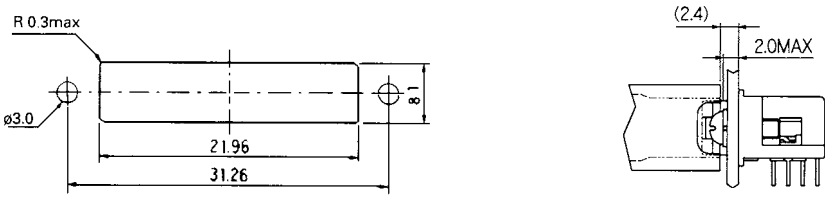

SERIES NC COVERS CROSS-REFERENCE

Series	Connector	Hood Type
Mini Delta Ribbon	NCP036-0*0-BF	NHA036-MC02
	NCP050-0*0 BF	NCP050-0*0 BF

Trading Division

COMMON CONNECTOR COVER

MATERIALS AND FINISH

Metal Parts: ZDC, Nickel Plated

FEATURES

- Metal cover for EMI protection

PART NUMBER

NHA 050 - MC 01

- Series No.
- No. of Leads
- Type MC = Metal Cover
- 01 = For I/O Cables

OUTLINE DIMENSIONS

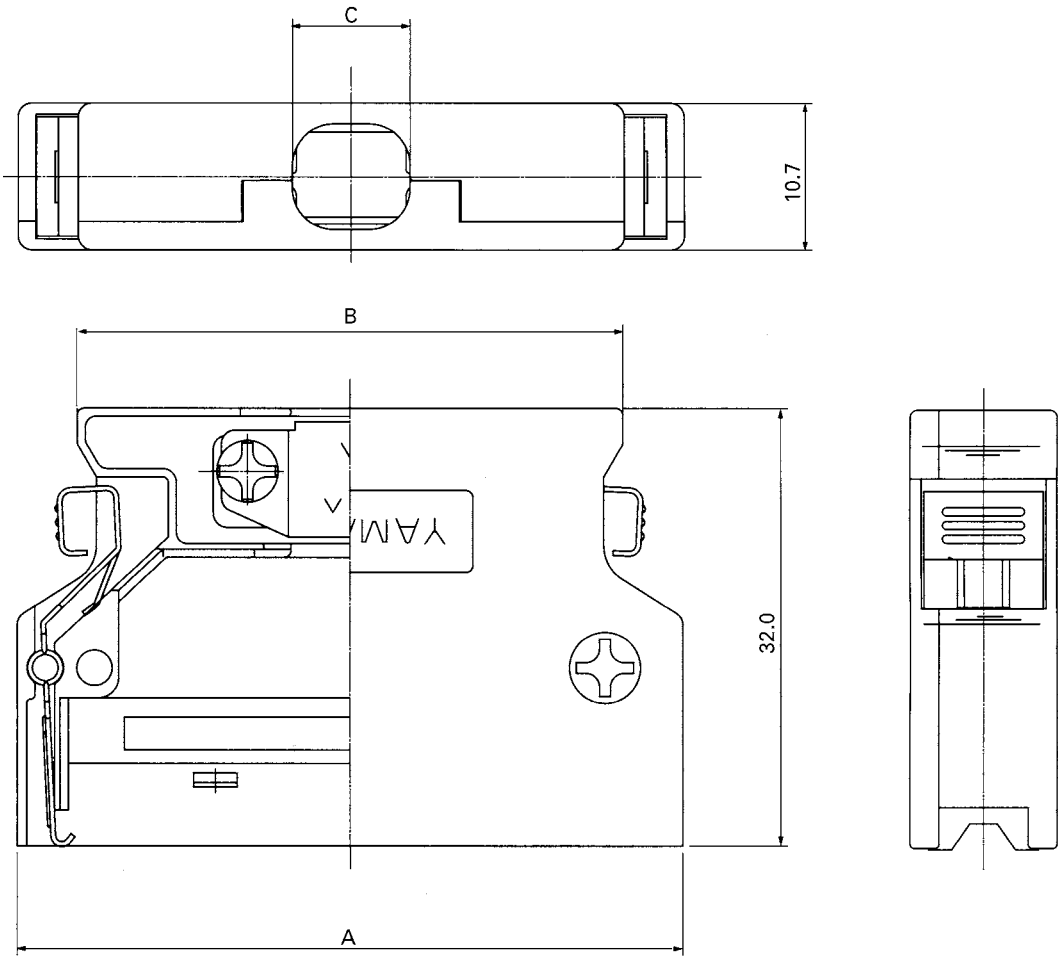

Part Number	No. of Leads	A	B	C	Cable Outer Dia.
NHA050-MC01	50	48.7	40.0	8.6	ø7.6 ~ ø8.6

COMMON CONNECTOR COVER

MATERIALS AND FINISH

Metal Parts: ZDC, Nickel Plated

FEATURES

- Metal cover for EMI protection

PART NUMBER

NHA 050 - MC 02

- Series No.
- No. of Leads
- Type MC = Metal Cover
- 02 = For I/O Cables

OUTLINE DIMENSIONS

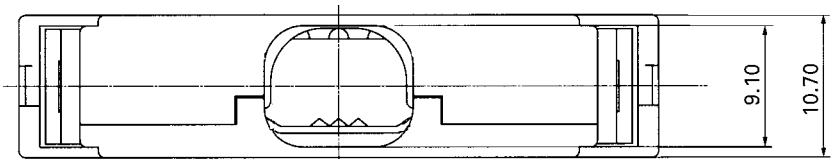

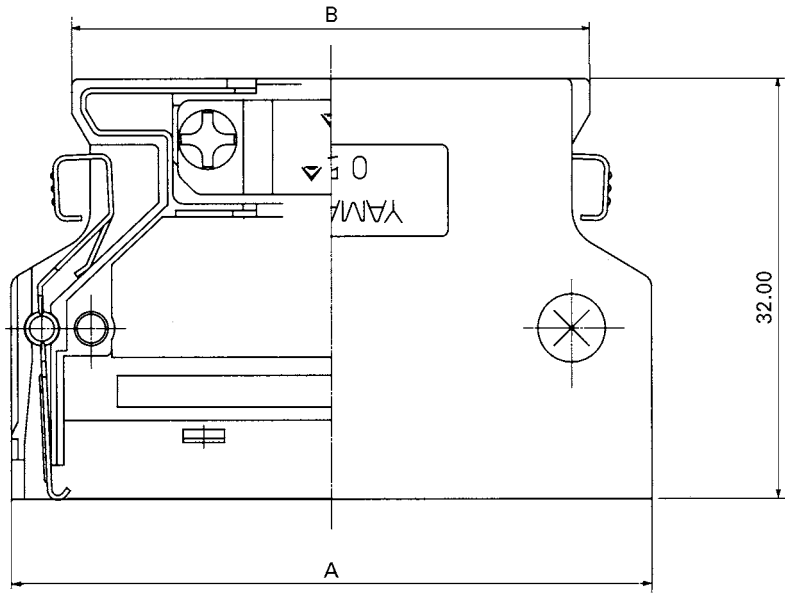

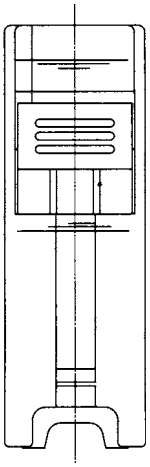

Part Number	No. of Leads	A	B	Cable Outer Dia.
NHA036-MC02	36	39.85	31.05	ø7.6 ~ ø8.6
NHA050-MC02	50	49.34	39.94	ø9.5 ~ ø10.5

SPECIFICATIONS

Insulation Resistance:	500MΩ min.
Withstanding Voltage:	250 V ACrms for 1 minute
Contact Resistance:	60mΩ max.
Current Rating:	1A
Operating Temp. Range:	–55°C to +105°C
Soldering Temp.:	230°C / 10sec.

PART NUMBER

RCS 068T - 002 - A S - 3.0

- Series (socket)
- No. of Leads (68)
- Design No.
- Mating Face Contact Plating: A = Au (0.76μm) over Ni (1.3μm)
- Solder Terminal Plating: S = Sn over Ni
- Length of Solder Tails (mm)

MATERIALS AND FINISH

Housing:	Thermoplastic (glass filled), UL94V-0
Contacts:	Phosphor Bronze
Shell:	Cold Roller Steel
Plating:	Gold over Nickel
Shell:	Nickel over Copper

FEATURES

- 0.8mm pitch interface connectors with bellows type contacts
- Shielded and over-molded for EMI/ESD protection

OUTLINE DIMENSIONS

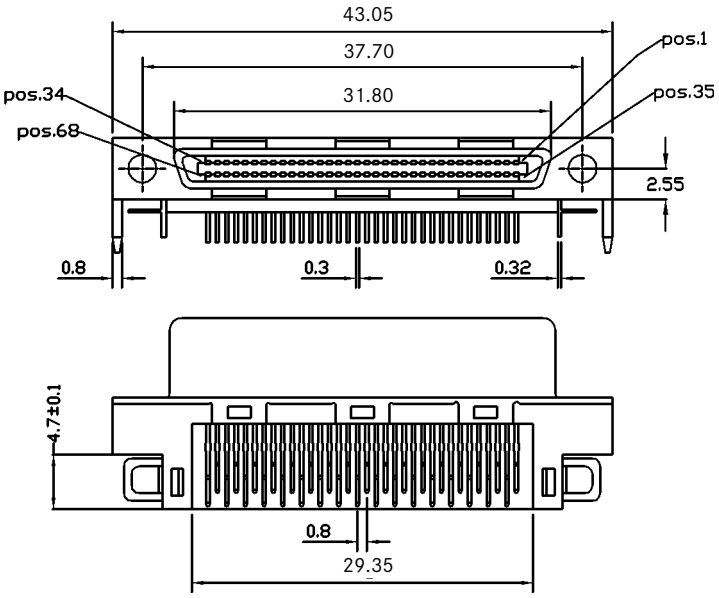

SOLDER TAIL DETAILS

Dimensions for RCS068T-002-AS-3.0

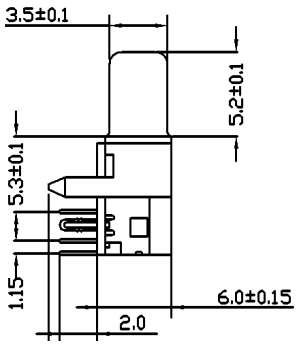

RECOMMENDED PCB LAYOUT

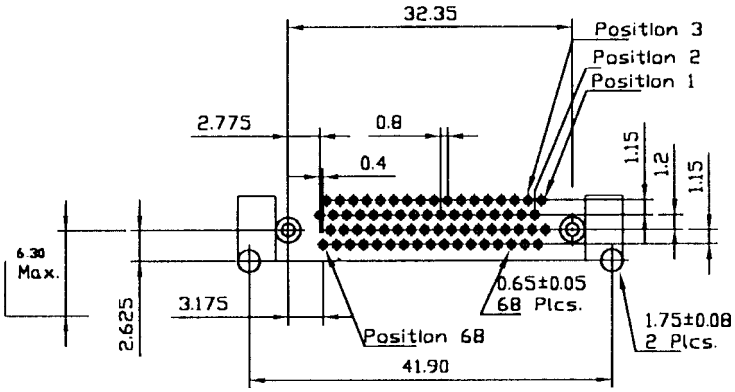

Top View

SPECIFICATIONS AND DRAWINGS ARE SUBJECT TO ALTERATION WITHOUT PRIOR NOTICE - DIMENSIONS IN MILLIMETER

SPECIFICATIONS

Insulation Resistance:	500MΩ min.
Withstanding Voltage:	250V ACrms for 1 minute
Contact Resistance:	80mΩ max.
Current Rating:	0.5A
Operating Temp. Range:	-55°C to +85°C

MATERIALS AND FINISH

Housing:	Thermoplastic (glass filled), UL94V-0
Contacts:	Copper Alloy
Shell:	Cold Roller Steel
Plating:	Gold over Nickel
Shell:	Nickel over Copper

FEATURES

- 0.8mm pitch interface connectors with bellows type contacts
- Shielded and over-molded for EMI/ESD protection

PART NUMBER

RCP 068T - 040 - A S

- Series (plug)
- No. of Leads
- Design No.
- Contact Plating: A = Au (0.76μm) over Ni (1.3μm)

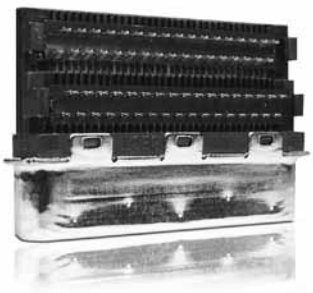

OUTLINE DIMENSIONS

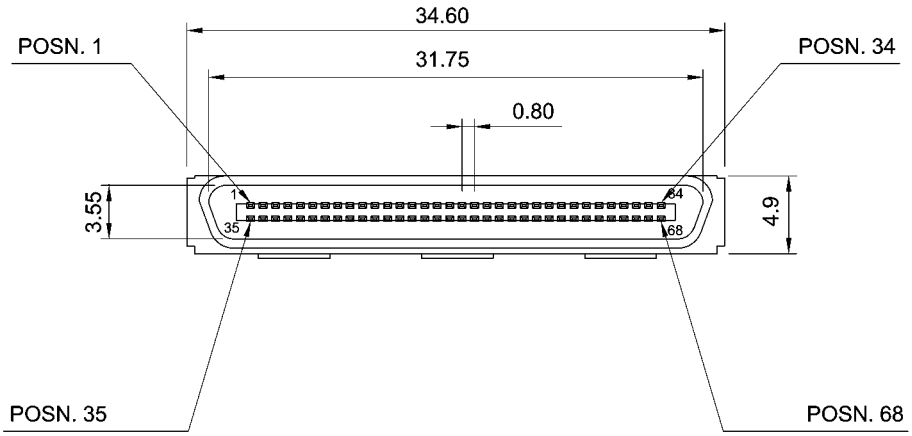

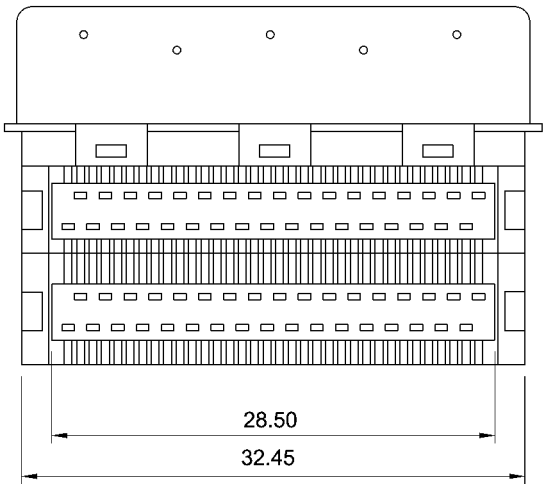

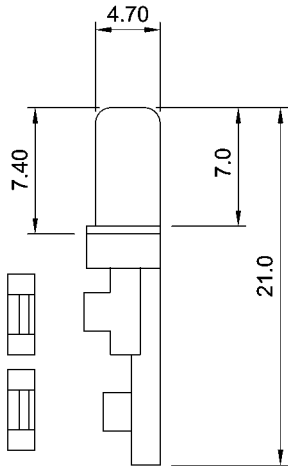

Trading Division

COMMON CONNECTOR COVER

MATERIALS AND FINISH

Hood:	Zink Alloy
Plating Hood:	Nickel over Copper
Plating Screw:	Nickel over Copper

FEATURES

- Metal cover for EMI protection

PART NUMBER

RCA 068T - MC 01/1

- Series
- No. of Leads
- Type of Cover = Metal
- 01 = For I/O Cables

OUTLINE DIMENSIONS

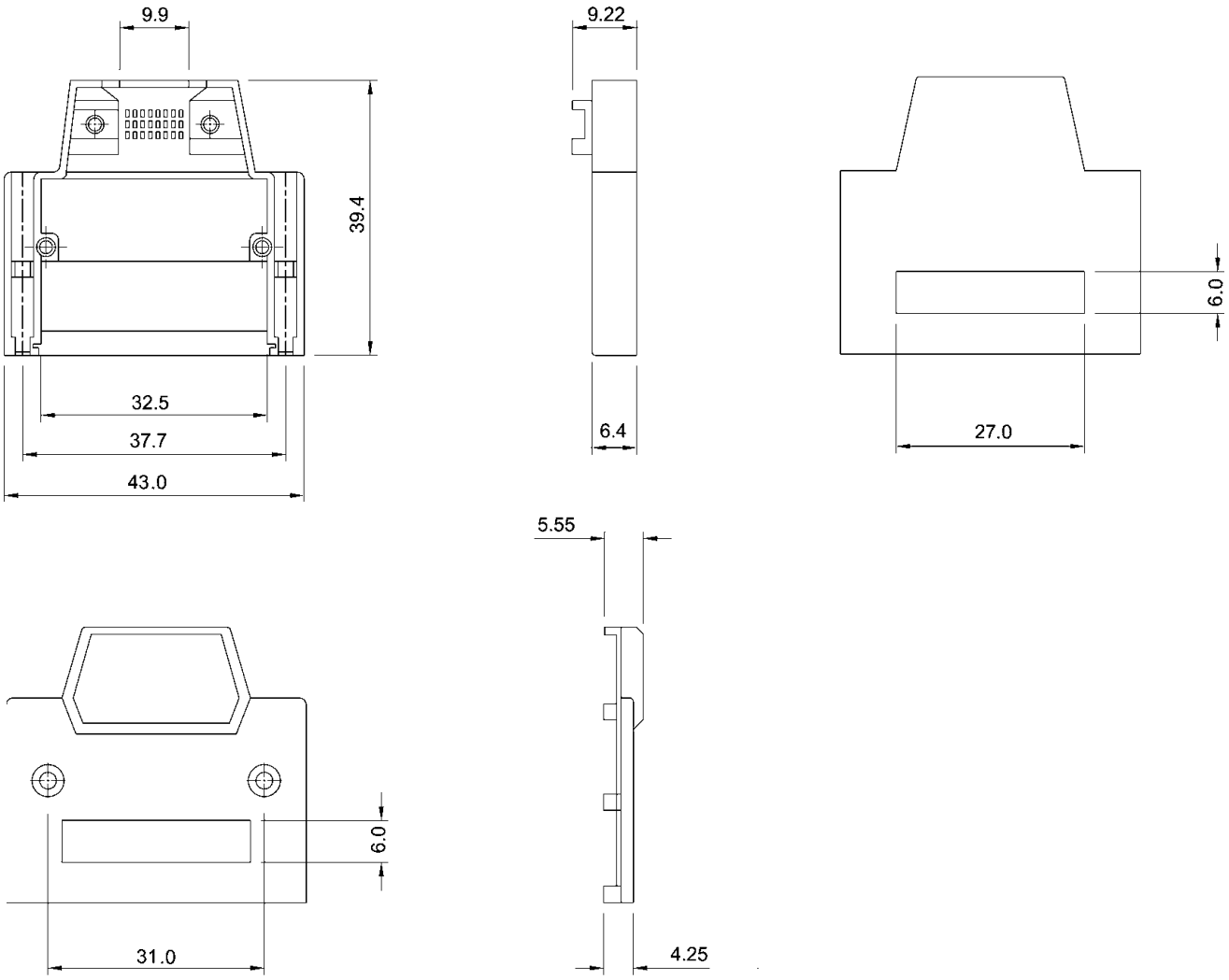

SCREW DIMENSIONS

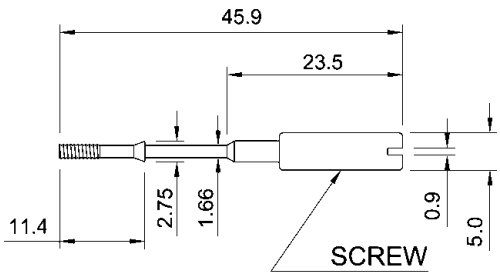

SPECIFICATIONS

Insulation Resistance:	5,000MΩ min.
Withstanding Voltage:	1,000 V AC
Contact Resistance:	10mΩ max.
Current Rating:	5A
Operating Temp. Range:	–55°C to +105°C

MATERIALS AND FINISH

Insulator:	Polyester Resin and Glass Fiber reinforced (UL94V-0)
Contacts:	Copper Alloy
Plating:	Gold over Nickel

FEATURES

- Stamped contacts
- Full gold plating

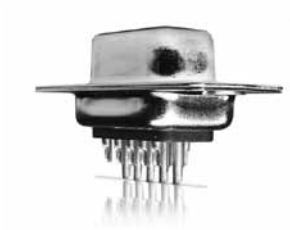

PART NUMBERS

14 Contacts **PART NO. CT09-15PK211**

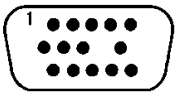

No pin Number 9

15 Contacts **PART NO. CT09-15P**

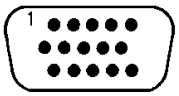

26 Contacts **PART NO. CT15-26P**

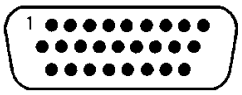

44 Contacts **PART NO. CT25-44P**

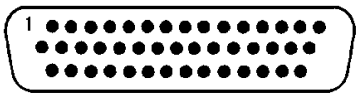

62 Contacts **PART NO. CT37-62P**

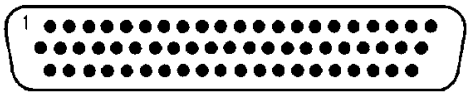

78 Contacts **PART NO. CT50-78P**

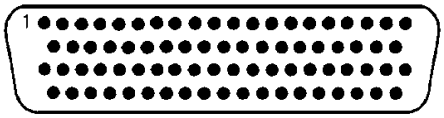

OUTLINE CONNECTOR DIMENSIONS

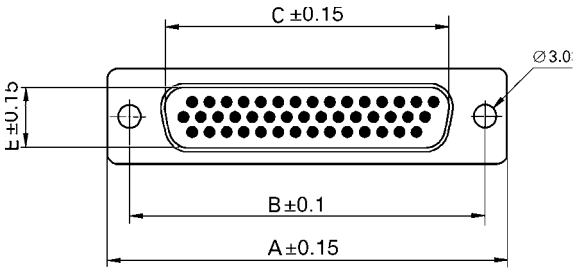

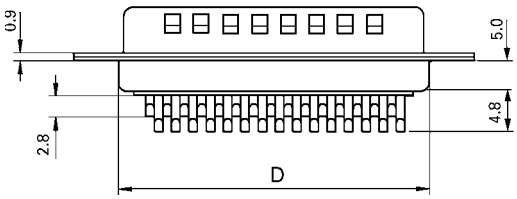

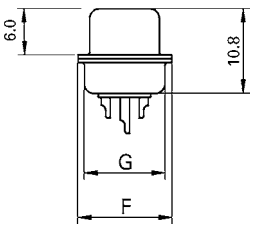

INFO.: The design of these connectors basically refer to DIN 51652

Part Number	No. of Contacts	A	B	C	D	E	F	G
CT09-15PK211	14	30.80	25.00	17.70	19.30	9.60	12.50	10.70
CT09-15P	15	30.80	25.00	17.70	19.30	9.60	12.50	10.70
CT15-26P	26	39.10	33.30	26.00	27.50	9.60	12.50	10.70
CT25-44P	44	53.00	47.00	40.20	41.30	9.60	12.50	10.70
CT37-62P	62	69.30	63.50	56.70	57.70	9.60	12.50	10.70
CT50-78P	78	66.90	61.10	54.00	55.30	13.30	15.40	13.60

SPECIFICATIONS

Insulation Resistance:	5,000MΩ min.
Withstanding Voltage:	1,000V AC
Contact Resistance:	10mΩ max.
Current Rating:	5A
Operating Temp. Range:	-55°C to +105°C

MATERIALS AND FINISH

Insulator:	Polyester Resin and Glass Fiber reinforced (UL94V-0)
Contacts:	Copper Alloy
Plating:	Gold over Nickel

FEATURES

- Stamped contacts
- Full gold plating

PART NUMBERS

15 Contacts **PART NO. CT09-15S**

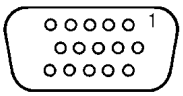

26 Contacts **PART NO. CT15-26S**

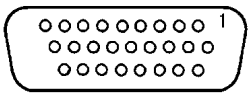

44 Contacts **PART NO. CT25-44S**

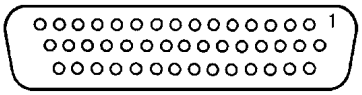

62 Contacts **PART NO. CT37-62S**

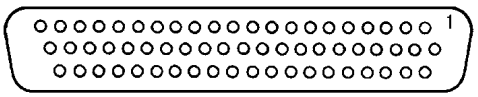

78 Contacts **PART NO. CT50-78S**

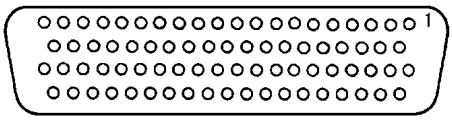

OUTLINE CONNECTOR DIMENSIONS

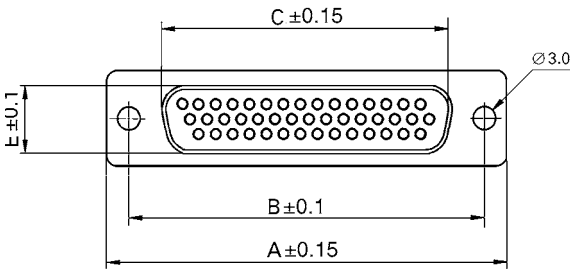

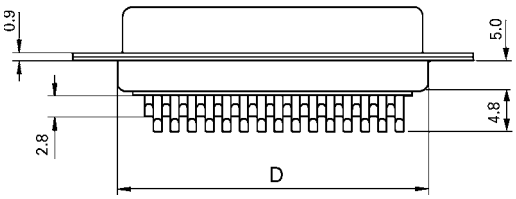

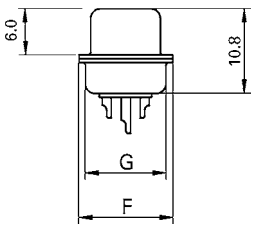

INFO.: The design of these connectors basically refer to DIN 51652

Part Number	No. of Contacts	A	B	C	D	E	F	G
CT09-15S	15	30.80	25.00	16.30	19.20	7.80	12.50	10.70
CT15-26S	26	39.10	33.30	24.60	27.70	7.80	12.50	10.70
CT25-44S	44	53.00	47.00	38.30	41.10	7.80	12.50	10.70
CT37-62S	62	69.30	63.50	54.80	57.30	7.80	12.50	10.70
CT50-78S	78	66.90	61.10	52.40	55.10	10.70	15.40	13.60

SPECIFICATIONS

Insulation Resistance:	5,000MΩ min.
Withstanding Voltage:	1,000V AC
Contact Resistance:	10mΩ max.
Current Rating:	5A
Operating Temp. Range:	–55°C to +105°C
Soldering Temp.:	230°C / 3 sec.

MATERIALS AND FINISH

Insulator:	Polyester Resin and Glass Fiber reinforced (UL94V-0)
Contacts:	Copper Alloy
Plating:	Gold over Nickel

FEATURES

- Stamped contacts
- Full gold plating
- Alternative: Selective gold plating

OUTLINE CONNECTOR DIMENSIONS

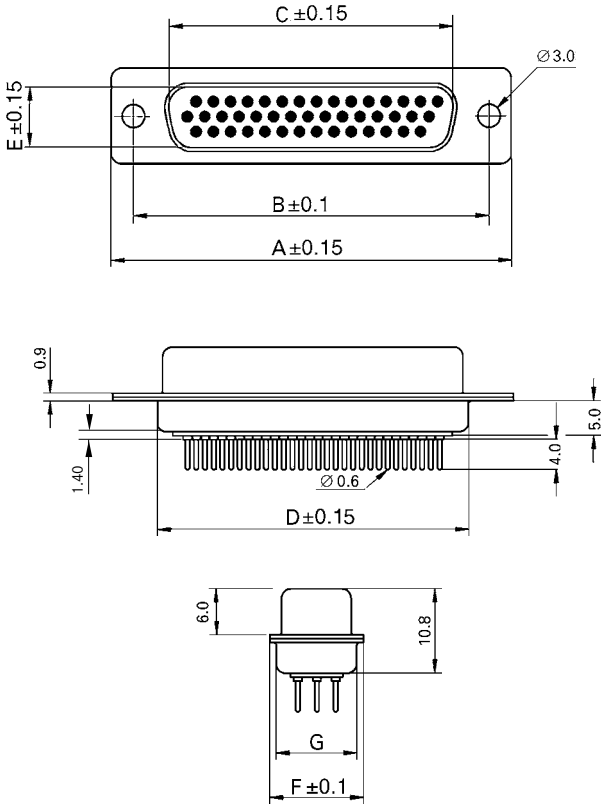

PART NUMBERS (please note)

CT**-**P1 (AU-PLATED)

CT**-**P1-K45 (SELECTIVE AU)

15 Contacts **PART NO. CT09-15P1 (-K45)**

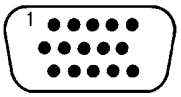

26 Contacts **PART NO. CT15-26P1 (-K45)**

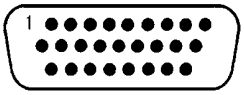

44 Contacts **PART NO. CT25-44P1 (-K45)**

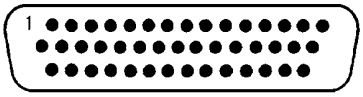

62 Contacts **PART NO. CT37-62P1 (-K45)**

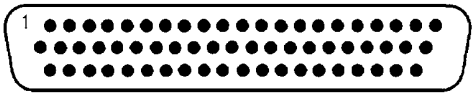

78 Contacts **PART NO. CT50-78P1 (-K45)**

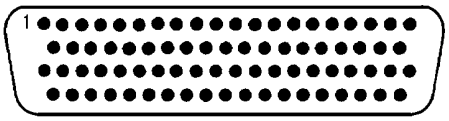

RECOMMENDED PCB LAYOUTS

For 15 contacts

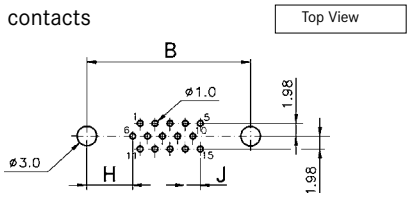

For 26, 44 and 62 contacts

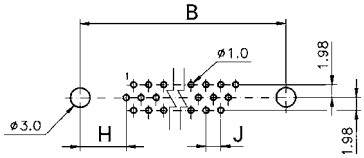

For 78 contacts

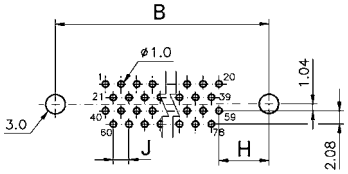

INFO.: The design of these connectors basically refer to DIN 51652

Part Number	No. of Contacts	A	B	C	D	E	F	G	H	J
CT09-15P1-*	15	30.80	25.00	16.90	19.20	8.30	12.50	10.70	7.10	2.29
CT15-26P1-*	26	39.20	33.30	25.25	27.70	8.30	12.50	10.70	6.80	2.29
CT25-44P1-*	44	53.05	47.05	38.95	41.10	8.30	12.50	10.70	7.00	2.29
CT37-62P1-*	62	69.40	63.50	55.40	57.30	8.30	12.50	10.70	7.00	2.42
CT50-78P1-*	78	67.00	61.00	52.80	55.10	11.30	15.30	13.60	7.60	2.42

SPECIFICATIONS

Insulation Resistance:	5,000MΩ min.
Withstanding Voltage:	1,000V AC
Contact Resistance:	10mΩ max.
Current Rating:	5A
Operating Temp. Range:	-55°C to +105°C
Soldering Temp.:	230°C / 3 sec.

MATERIALS AND FINISH

Insulator:	Polyester Resin and Glass Fiber reinforced (UL94V-0)
Contacts:	Copper Alloy
Plating:	Gold over Nickel

FEATURES

- Stamped contacts
- Selective gold plating

OUTLINE CONNECTOR DIMENSIONS

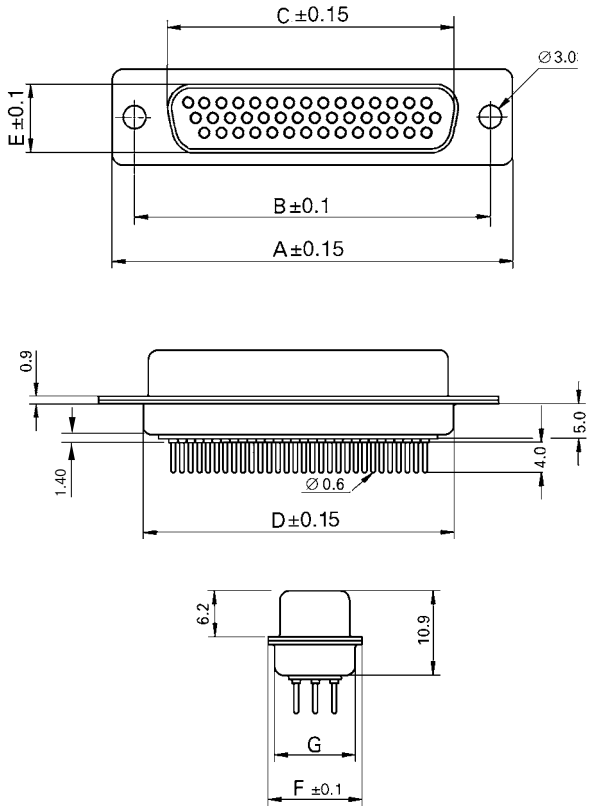

PART NUMBERS

15 Contacts **PART NO. CT09-15S1**

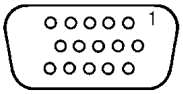

26 Contacts **PART NO. CT15-26S1**

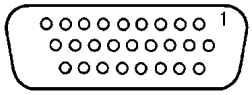

44 Contacts **PART NO. CT25-44S1**

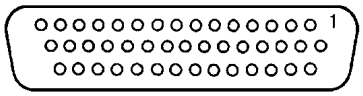

62 Contacts **PART NO. CT37-62S1**

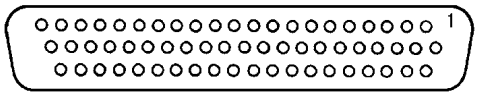

78 Contacts **PART NO. CT50-78S1**

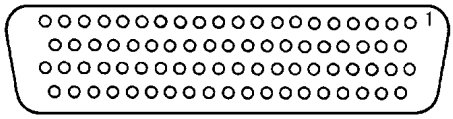

RECOMMENDED PCB LAYOUTS

For 15 contacts

Top View

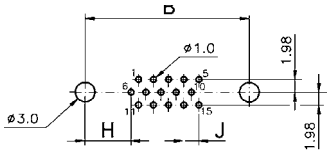

For 26, 44 and 62 contacts

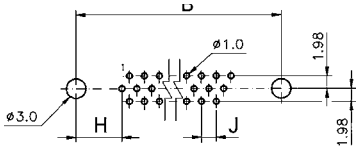

For 78 contacts

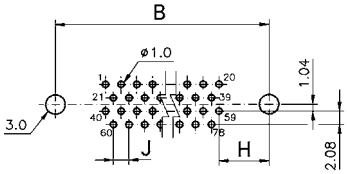

INFO.: The design of these connectors basically refer to DIN 51652

Part Number	No. of Contacts	A	B	C	D	E	F	G	H	J
CT09-15S1	15	30.80	25.00	16.35	19.20	7.90	12.50	10.70	7.10	2.29
CT15-26S1	26	39.20	33.30	24.70	27.70	7.90	12.50	10.70	6.80	2.29
CT25-44S1	44	53.05	47.05	38.40	41.10	7.90	12.50	10.70	7.00	2.29
CT37-62S1	62	69.40	63.50	54.80	57.30	7.90	12.50	10.70	7.00	2.42
CT50-78S1	78	67.00	61.00	52.20	55.10	10.90	15.30	13.60	7.60	2.42

SPECIFICATIONS

Insulation Resistance:	5,000MΩ min.
Withstanding Voltage:	1,000V AC
Contact Resistance:	15mΩ max.
Current Rating:	3A
Operating Temp. Range:	–55°C to +105°C
Soldering Temp.:	245°C / 3 sec.

MATERIALS AND FINISH

Insulator:	PBT, rated UL94V-0
Contacts:	Brass
Plating:	Selective Gold

FEATURES

- Stamped contacts
- Full gold plating
- With snap-in latches for board lock
- With M3 or 4-40UNC clinch nut

PART NUMBERS

15 Contacts — 4-40 = PART NO. CT09-15P5K272
M3 = PART NO. CT09-15P5K271

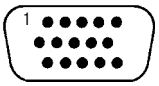

26 Contacts — 4-40 = PART NO. CT15-26P5K272
M3 = PART NO. CT15-26P5K271

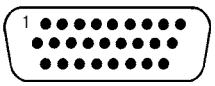

44 Contacts — 4-40 = PART NO. CT25-44P5K272
M3 = PART NO. CT25-44P5K271

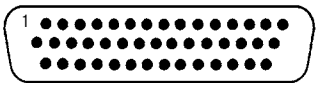

62 Contacts — 4-40 = PART NO. CT37-62P5K272
M3 = PART NO. CT37-62P5K271

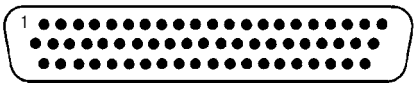

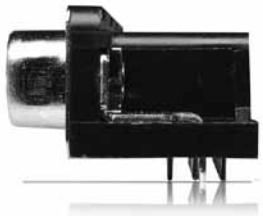

OUTLINE CONNECTOR DIMENSIONS

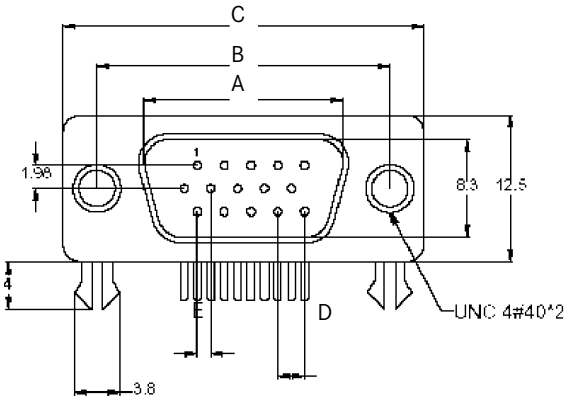

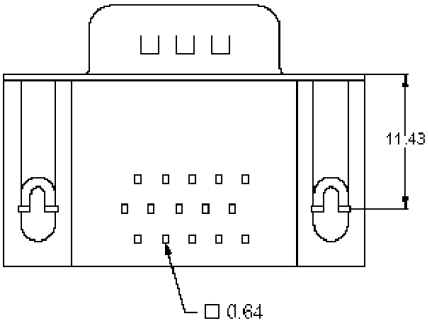

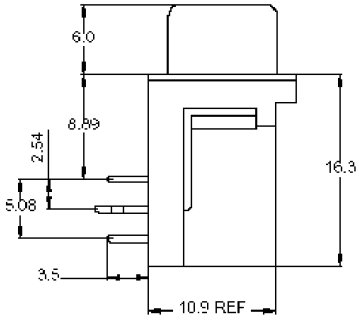

RECOMMENDED PCB LAYOUT

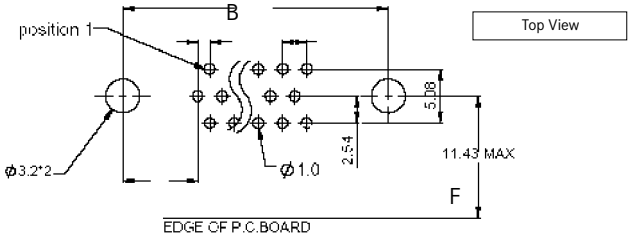

INFO.: The design of these connectors basically refer to DIN 51652

Part Number	No. of Contacts	A	B	C	D	E	F
CT09-15P5K27*	15	16.92	25.00	30.80	2.29	1.14	7.04
CT15-26P5K27*	26	25.25	33.30	39.20	2.29	1.14	6.88
CT25-44P5K27*	44	38.96	47.10	53.10	2.29	1.14	6.99
CT37-62P5K27*	62	55.42	63.50	69.40	2.41	1.20	7.00

SPECIFICATIONS

Insulation Resistance:	3,000MΩ min. (78 pin 5,000MΩ min.)
Withstanding Voltage:	1,000V AC
Contact Resistance:	15mΩ max. (78 pin 20mΩ max.)
Current Rating:	3A (78 pin 2A)
Operating Temp. Range:	-55°C to +105°C
Soldering Temp.:	245°C / 3 sec.

MATERIALS AND FINISH

Insulator:	Thermal plastic UL94V-0
Contacts:	Copper Alloy (78 pin Phosphor Bronze)
Plating:	Gold over Nickel

FEATURES

- Stamped contacts
- Selective gold plating
- With snap-in latches for PCB lock, or Through Hole to PCB with M3 or 4-40UNC clinch nut

OUTLINE CONNECTOR DIMENSIONS

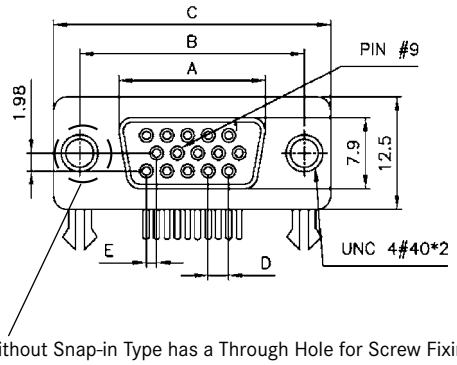

Without Snap-in Type has a Through Hole for Screw Fixing

For contacts:
15, 26, 44 and 62 pins

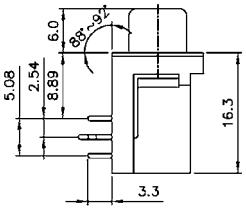

For contact: 78 pins

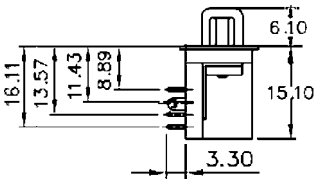

RECOMMENDED PCB LAYOUT

For contacts:
15, 26, 44 and 62 pins

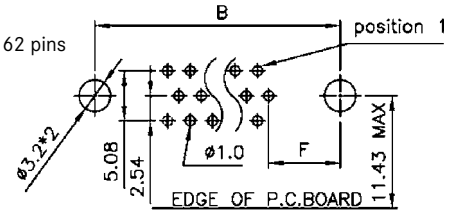

For 78 contacts

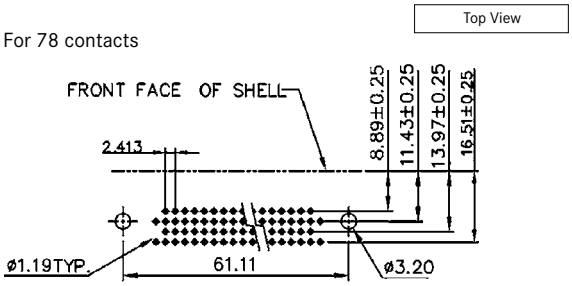

INFO.: The design of these connectors basically refer to DIN 51652

PART NUMBERS

15 Contacts
With Snap-in 4-40 = PART NO. CT09-15S5K228
w/o Snap-in 4-40 = PART NO. CT09-15S5K222
M3 = PART NO. CT09-15S5K229

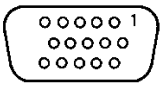

26 Contacts
With Snap-in 4-40 = PART NO. CT09-26S5K228
w/o Snap-in 4-40 = PART NO. CT09-26S5K222
M3 = PART NO. CT09-26S5K229

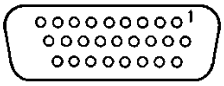

44 Contacts
With Snap-in 4-40 = PART NO. CT09-44S5K228
w/o Snap-in 4-40 = PART NO. CT09-44S5K222
M3 = PART NO. CT09-44S5K229

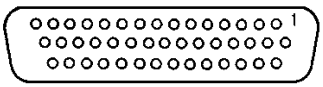

62 Contacts
With Snap-in 4-40 = PART NO. CT09-62S5K228
w/o Snap-in 4-40 = PART NO. CT09-62S5K222
M3 = PART NO. CT09-62S5K229

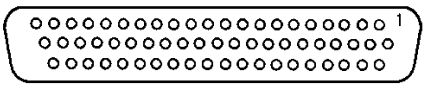

78 Contacts
With Snap-in 4-40 = PART NO. CT09-78S5K228
w/o Snap-in 4-40 = PART NO. CT09-78S5K222
M3 = PART NO. CT09-78S5K229

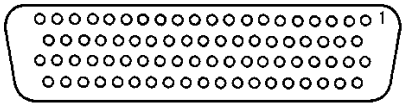

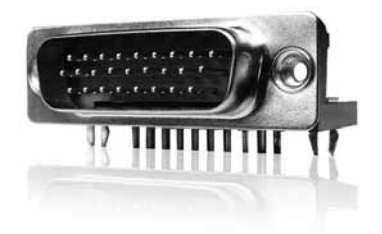

Part Number	No. of Contacts	A	B	C	D	E	F
CT09-15S5K22*	15	16.30	25.00	30.80	2.29	1.14	7.04
CT15-26S5K22*	26	24.60	33.30	39.20	2.29	1.14	6.88
CT25-44S5K22*	44	38.30	47.10	53.10	2.29	1.14	6.88
CT37-62S5K22*	62	54.80	63.50	69.40	2.41	1.20	7.00
CT50-78S5*22*	78	52.20	61.11	67.05	2.41	1.20	-

SPECIFICATIONS

Insulation Resistance:	1,000MΩ min. at 500V DC
Dielectric Strenght:	1,000 V AC min. for 1 minute
Voltage Rating:	300V DC
Withstanding Voltage:	500V AC for 1 Minute
Contact Resistance:	20mΩ max.
Current Rating:	1.5A
Operating Temp. Range:	-55°C to +105°C
Soldering Temp.:	245°C / 3 sec.

MATERIALS AND FINISH

Insulator:	PBT, Glass Fibre reinforced UL94V-0
Contacts:	Phosphor Bronze
Plating:	Mating Area = Au over Ni
	Solder Area = Sn over Ni
Snap-in:	Brass, Ni plated
Clinch Nut:	Brass, Ni plated
Shell:	Steel, Sn or Zn plated

FEATURES

- Slim line, total depth of only 4.6mm
- Coloured insulator acc. to PC99 standard available

PART NUMBER

CT09 -15 S 5 -S2 - K228 - *

- Series
- No of Pins = 15
- S = Female (15 pins only)
- 90° PCB Mounted
- Slim Line (2.50mm)
- Connection Assembly Option: With Snap-in Contacts with Clinch Nut Riveted UNC4-40
- Colour of Insulator: No Mark = Black PC99 = Pantone 661C (blue)

OUTLINE CONNECTOR DIMENSIONS (FEMALE, 15 PINS ONLY)

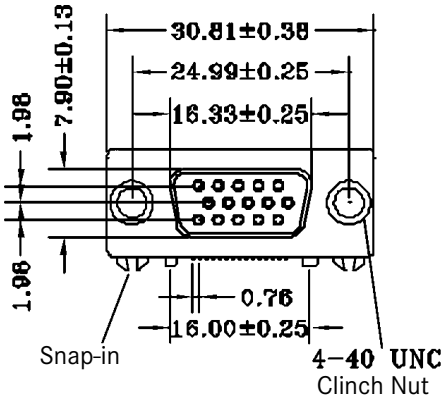

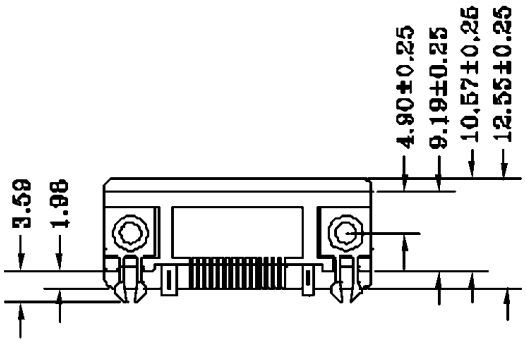

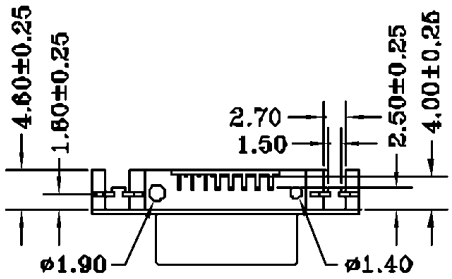

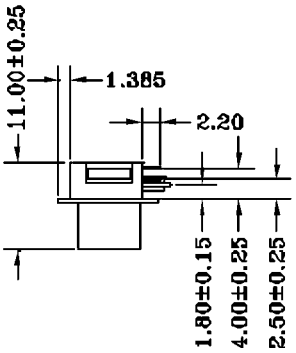

RECOMMENDED PCB LAYOUTS

Top View

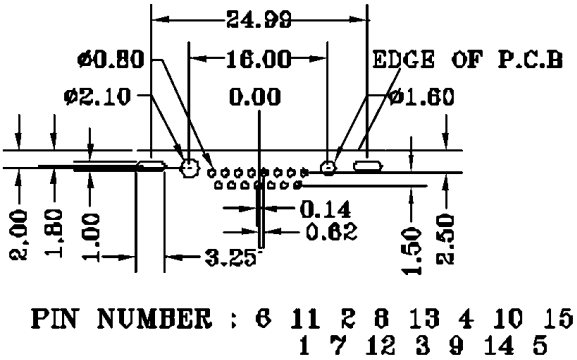

INFO.: The design of this connector basically refer to DIN 51652

Trading Division

SPECIFICATIONS

Insulation Resistance:	1,000MΩ min. at 500V DC
Dielectric Strenght:	1,000V AC min. for 1 minute
Voltage Rating:	300V DC
Withstanding Voltage:	500V AC for 1 minute
Contact Resistance:	13mΩ max.
Current Rating:	1.5A
Operating Temp. Range:	–55°C to +105°C
Soldering Temp.:	220°C / 60 sec., 250°C peak

MATERIALS AND FINISH

Insulator:	Nylon 6T, glass filled UL94V-0
Contacts:	Phosphor Bronze
Plating:	Mating Area = Au Flash over Ni
	Solder Area = Sn over Ni
Snap-in:	Brass, Ni or Sn plated
Clinch Nut:	Brass, Ni plated
Shell:	Steel, Sn, Zn or Ni plated

FEATURES

- Low profile, total depth of only 3.9mm
- Coloured insulator acc. to PC99 standard available

PART NUMBER

CT09 - 15 S 5 - S3 - K228 - *

- Series
- No of Pins = 15
- S = Female (15 pins only)
- 90° PCB Mounted
- SMT Type
- Connection Assembly Option: With Snap-in Contacts with Clinch Nut Riveted UNC4-40
- Colour of Insulator: No Mark = Black; PC99 = Pantone 661C (blue)

OUTLINE CONNECTOR DIMENSIONS (FEMALE, 15 PINS ONLY)

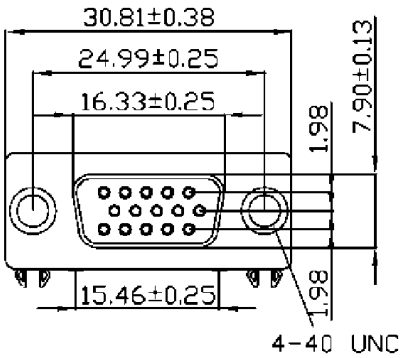

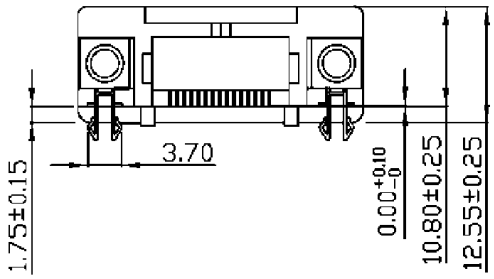

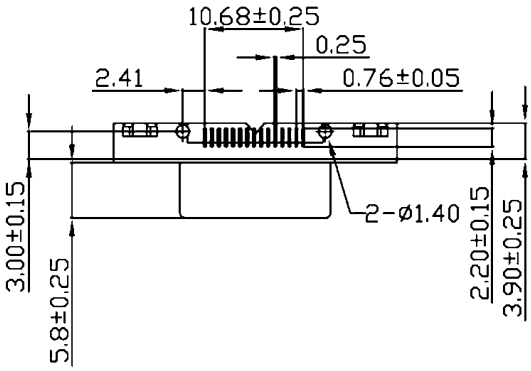

RECOMMENDED PCB LAYOUTS

Top View

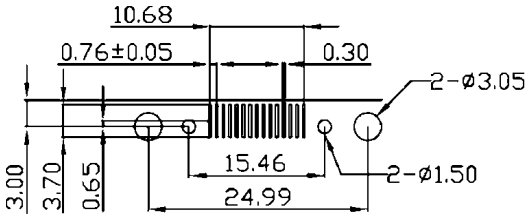

SNAP-IN CONTACT DETAIL

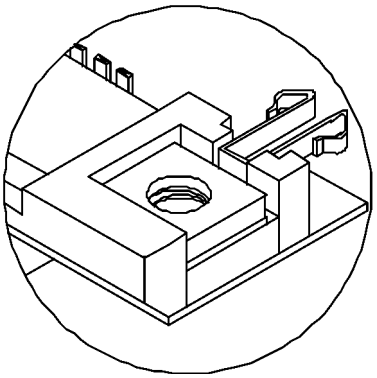

INFO.: The design of this connector basically refer to DIN 51652

SPECIFICATIONS

Insulation Resistance:	5,000MΩ min.
Withstanding Voltage:	1,000V AC
Contact Resistance:	10mΩ max.
Current Rating:	5A
Operating Temp. Range:	-55°C to +105°C

MATERIALS AND FINISH

Insulator:	Polyester Resin (glass filled) Fiber reinforced, UL94V-0
Contacts:	Stamped Copper Alloy
Plating:	Gold over Nickel

PART NUMBER

D S - 15 * N T - S

- Series
- Terminal: Solder Type
- No. of Contacts:
- P = Male S = Female
- Insulator Colour: N = Black
- Shell Plating: T = Tin
- Contact Type: S = Stamped

OUTLINE CONNECTOR DIMENSIONS (MALE AND FEMALE)

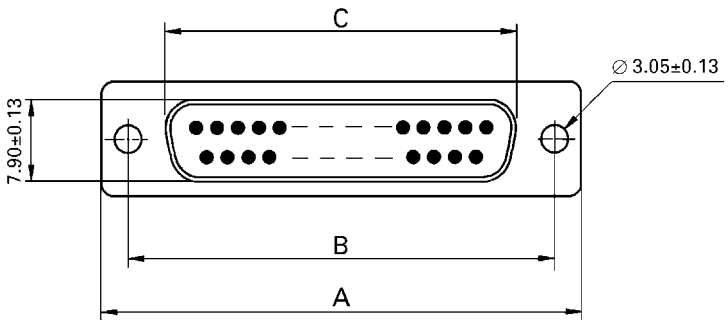

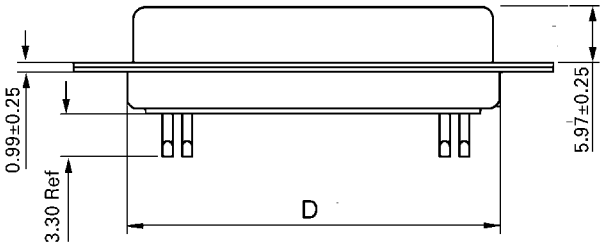

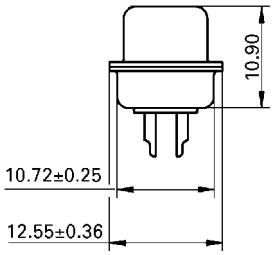

INFO.: The design of these connectors basically refer to DIN 51652

Part Number	No. of Contacts	A	B	C (MALE)	D (FEMALE)	E
DS-09*NT-S	9	30.81	24.99	16.92	16.33	19.28
DS-15*NT-S	15	39.14	33.32	25.25	24.66	27.51
DS-25*NT-S	25	53.04	47.04	38.96	38.38	41.28
DS-37*NT-S	37	69.32	63.50	55.42	54.84	57.71
DS-50*NT-S	50	66.93	61.11	55.00	52.43	55.32

SPECIFICATIONS

Insulation Resistance:	5,000MΩ min.
Withstanding Voltage:	1,000V AC
Contact Resistance:	10mΩ max.
Current Rating:	5A
Operating Temp. Range:	-55°C to +105°C
Soldering Temp.:	230°C / 3 sec.

MATERIALS AND FINISH

Insulator:	Polyester Resin (glass filled) Fiber reinforced, UL94V-0
Contacts:	Stamped Copper Alloy
Plating:	Gold over Nickel

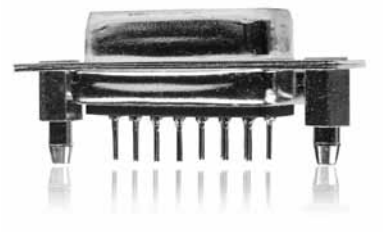

PART NUMBER

D D - 15 * N T - S - **

- Series
- Terminal: Dip Type
- No. of Contacts
- P = Male S = Female
- Insulator Colour: N = Black
- Shell Plating: T = Tin
- Contact Type: S = Stamped
- For Special Function

OUTLINE CONNECTOR DIMENSIONS (MALE AND FEMALE)

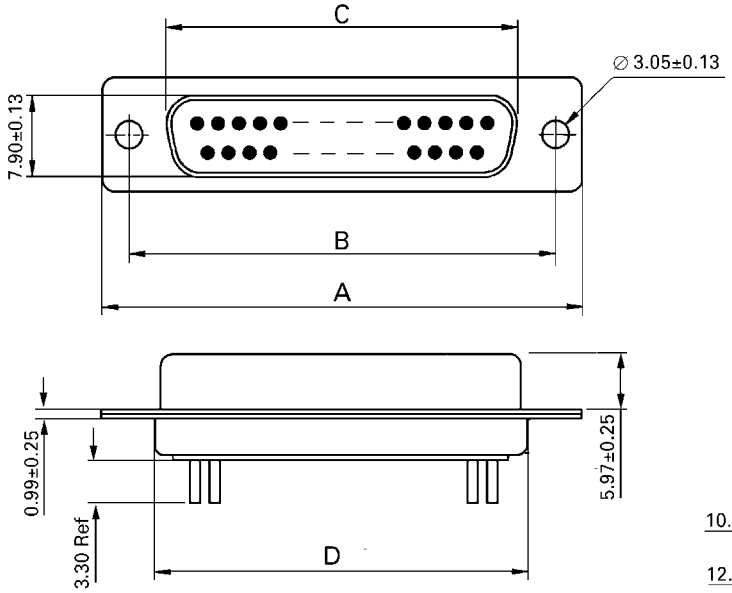

RECOMMENDED PCB LAYOUT

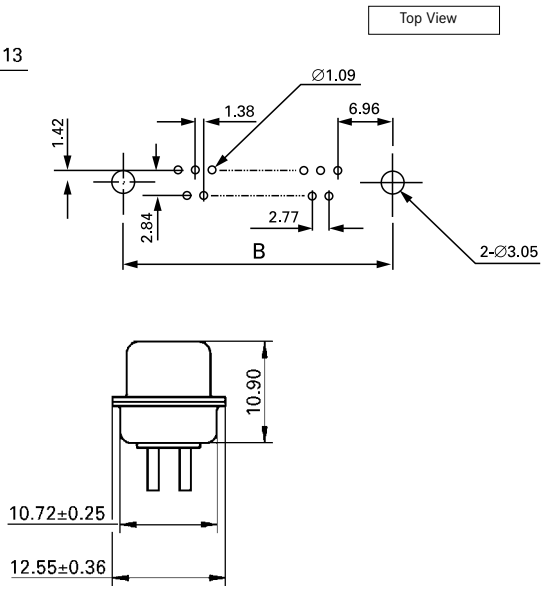

SPECIAL FUNCTIONS

1: "IE" MATE, 5.8mm Snap-in rivet, 4-40 UNC

2: "DE" MATE, 5.8mm Open Hex Rear Rivet, 4-40 UNC

3: "DB" MATE, 5.8mm Open Hex Front Rivet, 4-40 UNC

4: "CE" MATE, 3.8mm Open Hex Rear Rivet, 4-40 UNC

5: "CB" MATE, 3.8mm Open Hex Front Rivet, 4-40 UNC

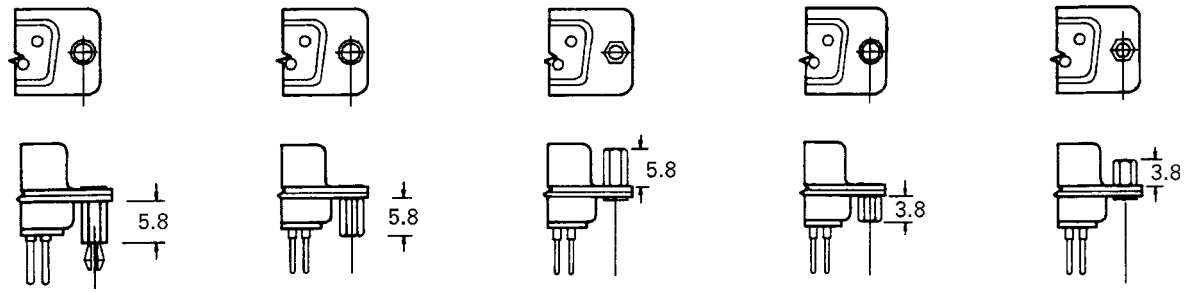

INFO.: The design of these connectors basically refer to DIN 51652

Part Number	No. of Contacts	A	B	C (MALE)	D (FEMALE)	E
DD-09*NT-S-**	9	30.81	24.99	16.92	16.33	19.28
DD-15*NT-S-**	15	39.14	33.32	25.25	24.66	27.51
DD-25*NT-S-**	25	53.04	47.04	38.96	38.38	41.28
DD-37*NT-S-**	37	69.32	63.50	55.42	54.84	57.71
DD-50*NT-S-**	50	66.93	61.11	55.00	52.43	55.32

SPECIFICATIONS

Insulation Resistance:	5,000MΩ min.
Withstanding Voltage:	1,000 V AC
Contact Resistance:	10mΩ max.
Current Rating:	5A
Operating Temp. Range:	-55°C to +105°C
Soldering Temp.:	240°C / 3 sec.

MATERIALS AND FINISH

Insulator:	Polyester Resin (glass filled) Fiber reinforced, UL94V-0
Contacts:	Stamped Copper Alloy
Plating:	Gold over Nickel

FEATURES

- M3 female threaded screw available on request

PART NUMBER

D R* - 25 * 1 *

- Series
- Terminal Version:
  A = 7.2mm (US Std.)
  B = 9.4mm (Euro. Std.)
- No. of Contacts
- S = Female P = Male
- PCB Assembly: 1 = With Snap-in
- Connection Assembly Option:
  1 = Fixed Female Screw Locks, 4-40
  2 = Clinch Nut Rivetted, 4-40
  (Without Female Screw Locks)

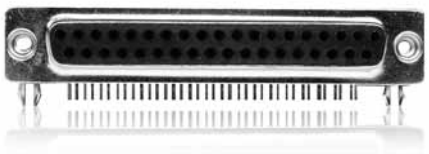

OUTLINE CONNECTOR DIMENSIONS (MALE AND FEMALE)

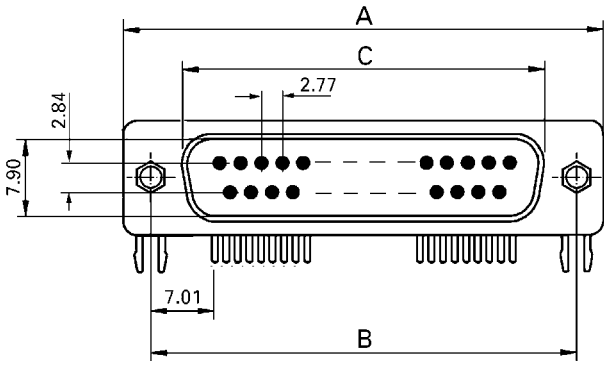

RECOMMENDED PCB LAYOUT

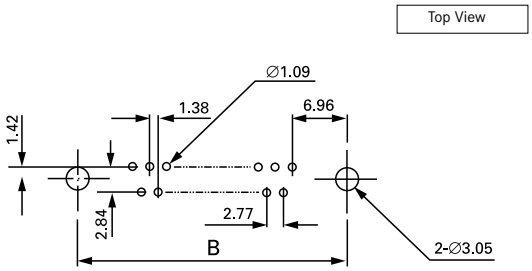

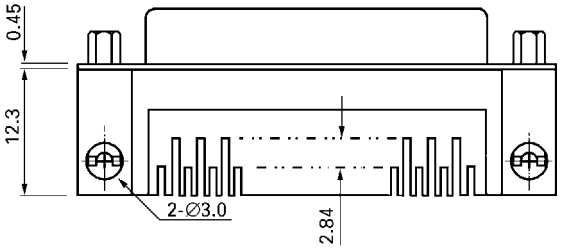

US - Standard:
(RA Terminal Version)

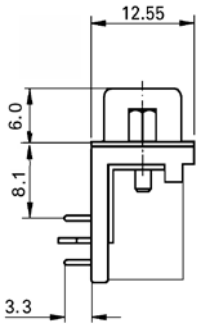

European - Standard:
(RB Terminal Version)

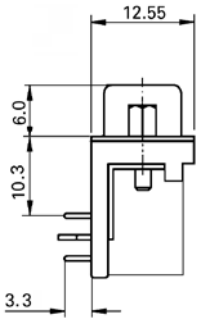

INFO.: The design of these connectors basically refer to DIN 51652

Part Number	No. of Contacts	A	B	C (MALE)	D (FEMALE)
DR*-09*1*	9	30.81	24.99	16.92	16.33
DR*-15*1*	15	39.14	33.32	25.25	24.66
DR*-25*1*	25	53.04	47.04	38.96	38.38
DR*-37*1*	37	69.32	63.50	55.42	54.84

SPECIFICATIONS

Insulation Resistance:	5,000MΩ min.
Withstanding Voltage:	1,000 V AC
Contact Resistance:	20mΩ max.
Current Rating:	5A
Operating Temp. Range:	-55°C to +105°C
Soldering Temp.:	26°C / 3 sec.

MATERIALS AND FINISH

Insulator:	PBT (glass filled) , UL94V-0
Contacts:	Phoshor Bronze
Shell:	Ni plated
Plating:	Gold over Nickel

FEATURES

- Short distance type (female 5.08mm)

PART NUMBER

D RS - * * 1 2 - *

- Series
- Terminal Version: RS = 5.08mm (Distance)
- No. of Contact Pins
- P = Male (9 pins only) S = Female (25 pins only)
- PCB Assembly: 1 = With Snap-in
- Connection Assembly: 2 = Clinch Nut Rivetted, 4-40 (Without Female Screw Locks)
- For Special Platings

OUTLINE CONNECTOR DIMENSIONS (FEMALE 25 PINS)

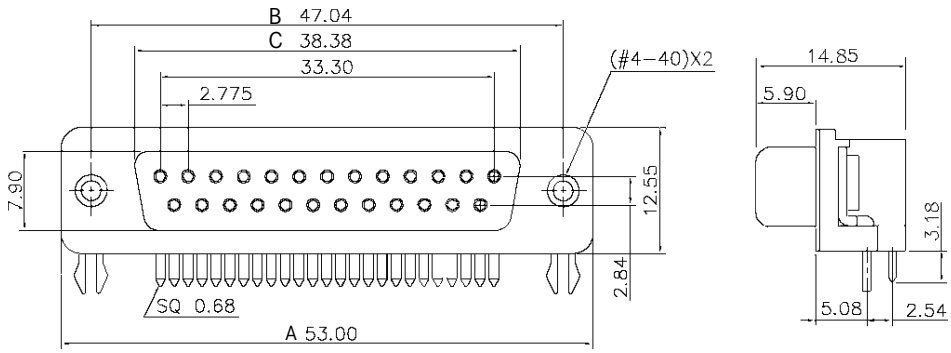

OUTLINE CONNECTOR DIMENSIONS (MALE 9 PINS)

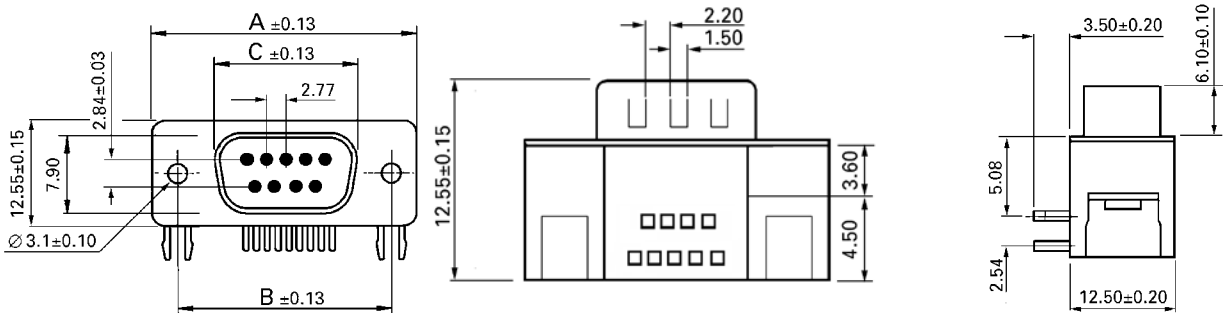

RECOMMENDED PCB LAYOUTS

Male 9 pins

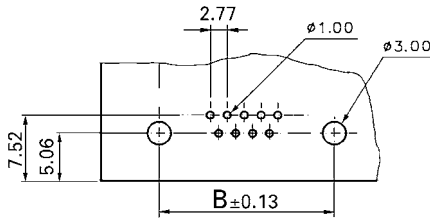

Female 25 pins

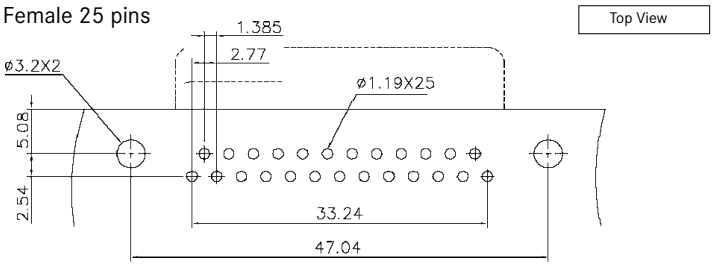

INFO.: The design of these connectors basically refer to DIN 51652

Part Number	No. of Contacts	A	B	C
DRS-09P12-*	9	30.85	24.95	16.92
DRS-25S12-*	25	53.00	47.04	38.38

SPECIFICATIONS

Insulation Resistance:	1,000MΩ min.
Withstanding Voltage:	500 V AC
Contact Resistance:	20mΩ max.
Current Rating:	5A
Operating Temp. Range:	-40°C to +105°C
Soldering Temp.:	220°C / 60 sec., 250°C peak

MATERIALS AND FINISH

Insulator:	Nylon 6T (glass filled)
Contacts:	Phosphor Bronze
Plating:	Mating area - Flash Au over Ni
	Solder area - Sn over Ni

PART NUMBER

DSM - 09 P - G2 - V - *

- Series
- No. of Pins = 9 & 25
- P = Male
- Contact Plating: G2 = Gold Flash
- PCB Latch Type: V = Snap-in Contact
- Colour of Insulator:
  No Mark = Black
  PC99 = Pantone 322C (9 pins only)

OUTLINE CONNECTOR DIMENSIONS

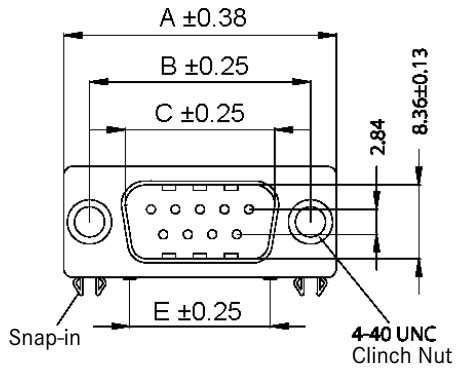

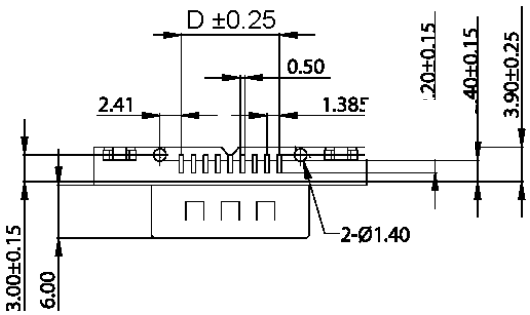

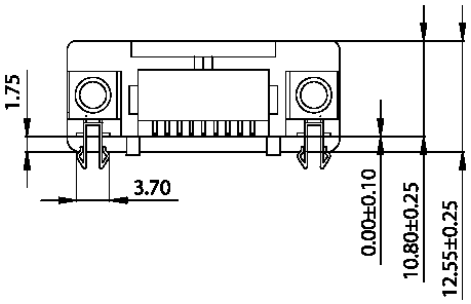

SNAP-IN CONTACT TYPE

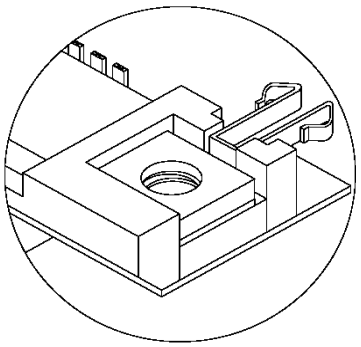

RECOMMENDED PCB LAYOUTS

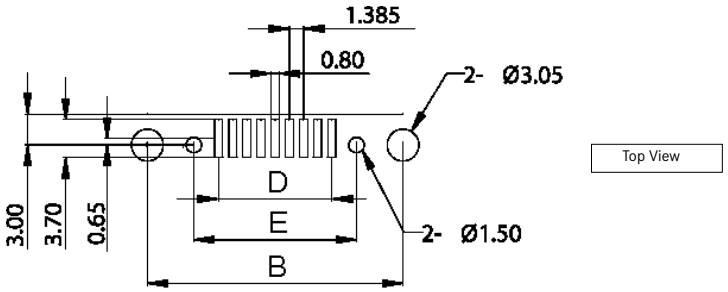

INFO.: The design of these connectors basically refer to DIN 51652

Part Number	No. of Contacts	A	B	C	D	E
DSM-09P-G2-V-*	9	30.81	24.99	16.92	11.08	15.90
DSM-25P-G2-V-*	25	53.04	47.04	38.96	33.24	38.06

SPECIFICATIONS

Insulation Resistance:	1,000MΩ min.
Withstanding Voltage:	500 V AC for 1 minute
Contact Resistance:	13mΩ max.
Current Rating:	5A
Operating Temp. Range:	-55°C to +105°C
Soldering Temp.:	220°C / 60 sec., 250°C peak

MATERIALS AND FINISH

Insulator:	Nylon 6T (glass filled)
Contacts:	Phosphor Bronze
Plating:	Mating area - Flash Au over Ni
	Solder area - Sn over Ni

PART NUMBER

DSM - 09 S - G2 - V

- Series
- No. of Pins
- S = Female
- Contact Plating: G2 = Gold Flash
- PCB Latch Type: V = Snap-in Contacts

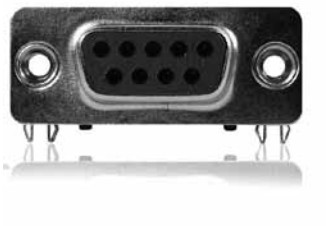

OUTLINE CONNECTOR DIMENSIONS

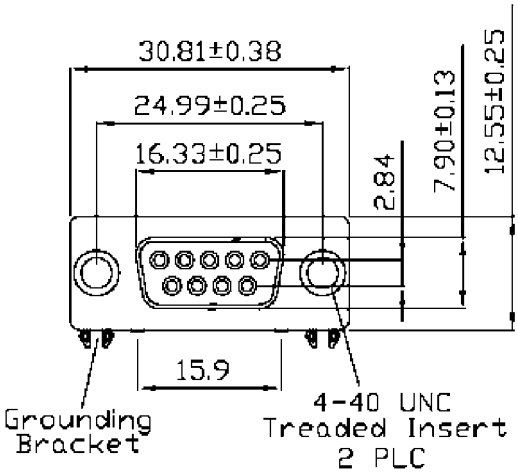

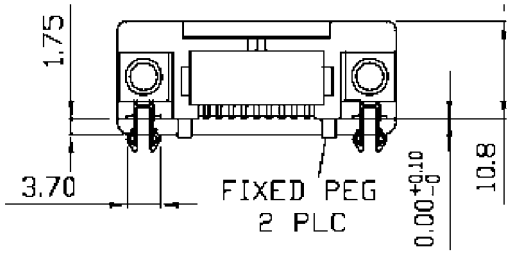

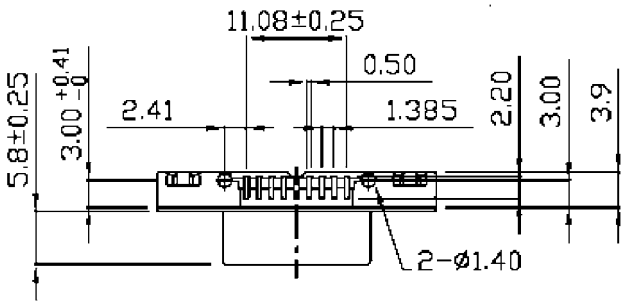

SNAP-IN CONTACT TYPE

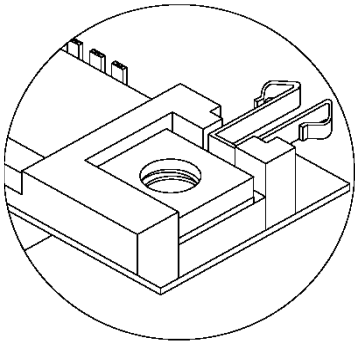

RECOMMENDED PCB LAYOUTS

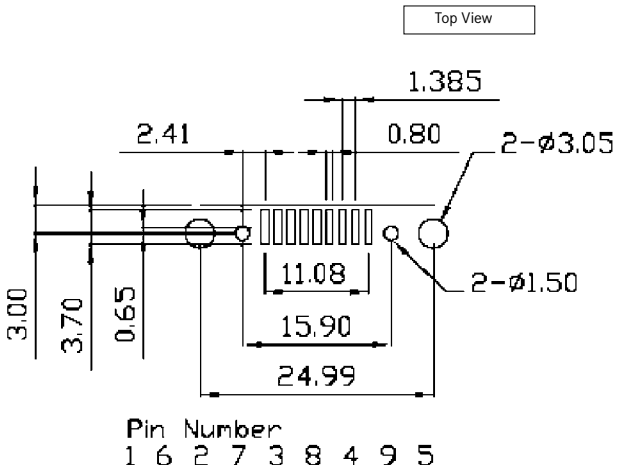

INFO.: The design of thIS connector basically refer to DIN 51652

SPECIFICATIONS

Insulation Resistance:	1,000MΩ min. at 500V DC
Withstanding Voltage:	500V AC
Contact Resistance:	10mΩ max.
Current Rating:	1A
Operating Temp. Range:	–55°C to +105°C

MATERIALS AND FINISH

Shell:	Steel, Tin Plated
Insulator:	Polyester Resin (glass filled)
	Fiber reinforced, UL94V-0
Contacts:	Phospor Bronze
Plating:	Mating Face - Gold over Nickel
	I.D.C Terminal - Tin over Nickel
Wire Size:	AWG 26 or 28 Stranded Wire

PART NUMBER

D F2 - 25 * M - * N

- Series
- Terminal Version: F2 = IDC Type
- No. of Contact Pins
- S = Female P = Male
- Metal Shell
- Strain Relief: M = Metal P = Plastic
- Insulator Colour: N = Black (standard) G = Grey (min. order 5,000 pcs.)

OUTLINE CONNECTOR DIMENSIONS (MALE AND FEMALE)

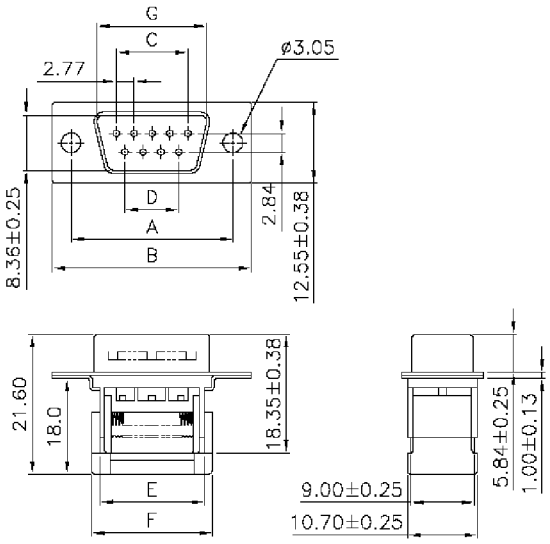

Male

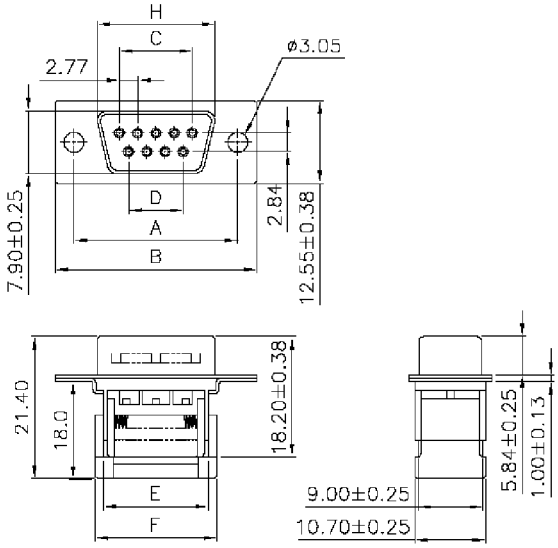

Female

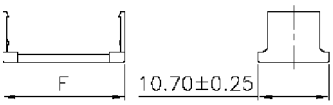

Plastic Strain Relief

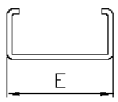

Stainless Steel Strain Relief

INFO.: The design of these connectors basically refer to DIN 51652

Part Number	No. of Contacts	A	B	C	D	E	F	G	H
DF2-09*M-**	9	24.99	30.80	11.08	8.31	16.10	18.60	16.92	16.33
DF2-15*M-**	15	33.32	39.10	19.39	16.62	24.00	26.60	25.25	24.66
DF2-25*M-**	25	47.04	53.09	33.24	30.47	38.14	40.90	38.96	38.38
DF2-37*M-**	37	63.50	69.40	49.86	47.09	54.60	57.10	55.45	54.84

SPECIFICATIONS

Insulation Resistance:	3,000MΩ min.
Withstanding Voltage:	1,000V AC
Contact Resistance:	15mΩ max.
Current Rating:	3A
Operating Temp. Range:	–55°C to +105°C
Soldering Temp.:	230°C / 3 sec.
Operating Voltage:	250V AC max.

PART NUMBER

D RF - 25 * 1 1 - ZN

- Series
- Terminal Version: RF = Right Angle (Filtered)
- No. of Contacts Pins
- S = Female P = Male
- PCB Assembly: 1 = Snap-in
- Connection Assembly Option: 1 = Fixed Female Screw Lock, 4-40
- Mating Face Contact Plating: ZN = Selective Gold Plating

MATERIALS AND FINISH

Shell:	Steel, Tin plated
Insulator:	Thermal Plastic, UL94V-0
Contacts:	Male, Copper Alloy
	Female, Brass
Plating:	Selective Gold

OUTLINE CONNECTOR DIMENSIONS

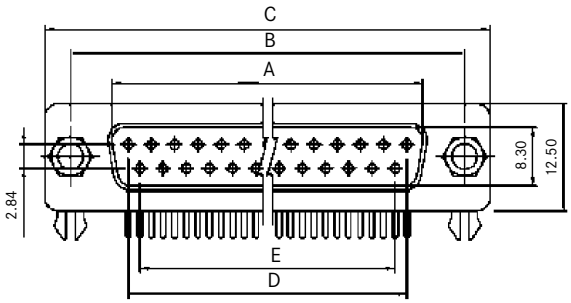

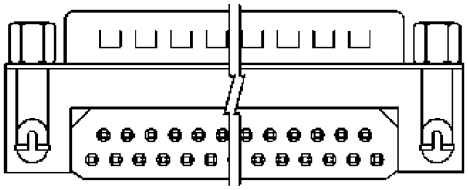

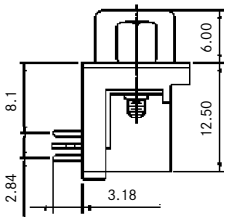

RECOMMENDED PCB LAYOUT

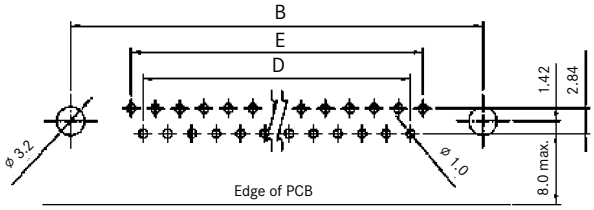

Top View

INFO.: The design of these connectors basically refer to DIN 51652

Part Number	No. of Contacts	A	B	C	D	E
DRF-09*11-ZN	9	16.92	25.00	30.80	8.31	11.09
DRF-15*11-ZN	15	25.25	33.30	39.20	16.62	19.39
DRF-25*11-ZN	25	38.96	47.10	53.10	30.47	33.24
DRF-37*11-ZN	37	55.42	63.50	96.40	47.09	49.85

SPECIFICATIONS

Insulation Resistance:	5,000MΩ min.
Withstanding Voltage:	1,000V AC
Contact Resistance:	10mΩ max.
Current Rating:	5A
Operating Temp. Range:	-55°C to +105°C
Soldering Temp.:	240°C / 3 sec.

MATERIALS AND FINISH

Shell:	Steel, Tin plated
Insulator:	Polyester Resin (glass filled)
	Fiber reinforced, UL94V-0
Contacts:	Stamped Copper Alloy
Plating:	Gold over Nickel

PART NUMBER

D DP - 01 * * 1

Series

Connector Version:
DP = Dual Port

No. of Contacts (Top/Bottom):
01 = 9 / 9
02 = 15 / 15
03 = 25 / 25
10 = 37 / 37

Conector Types (Top / Bottom):
1 = Male / Male
2 = Male / Female
3 = Female / Male
4 = Female / Female

Vertical Distance between Connectors:
S = 15.88mm, M = 19.05mm, L = 22.86mm

Assembly:
1 = Snap-in + 4-40 Clinch Nut (Standard)
2 = 4-40 Threaded

OUTLINE CONNECTOR DIMENSIONS

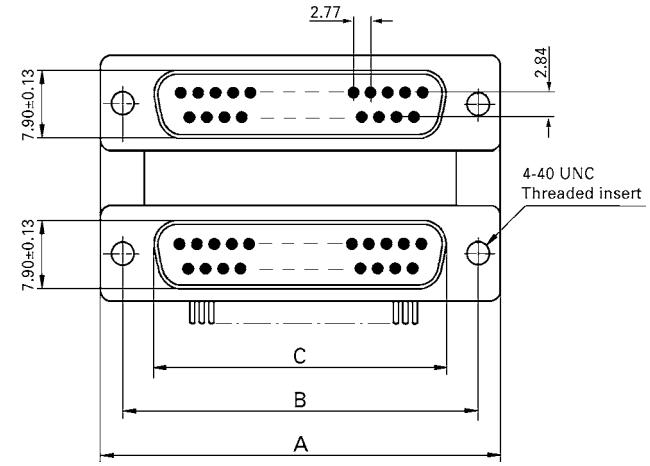

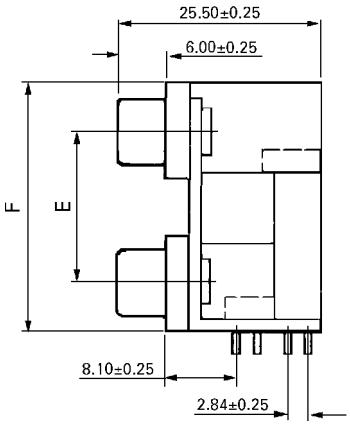

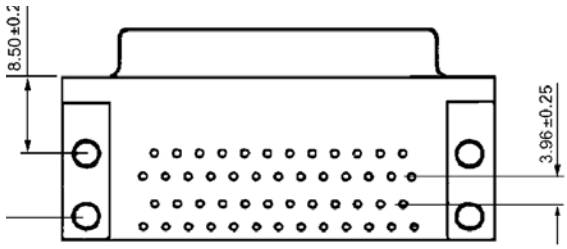

RECOMMENDED PCB LAYOUTS

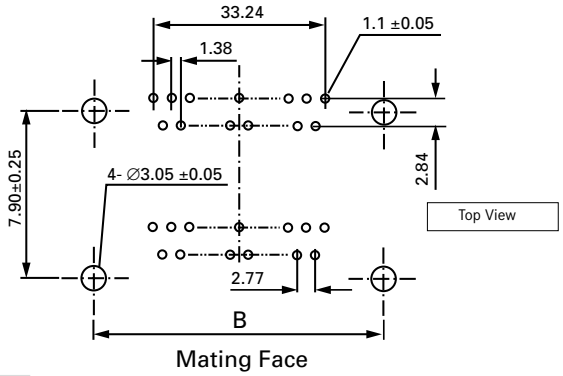

INFO.: The design of these connectors basically refer to DIN 51652

Part Number	No. of Contacts	A	B	C
DDP-01**1	9 / 9	30.81	24.99	16.33
DDP-02**1	15 / 15	39.14	33.32	24.66
DDP-03**1	25 / 25	53.04	47.04	38.38
DDP-10**1	37 / 37	69.32	63.50	54.84

Vertical Distances	E	F
Type S	15.88	28.42
Type M	19.05	31.60
Type L	22.86	35.41

SPECIFICATIONS

Insulation Resistance:	5,000MΩ min.
Withstanding Voltage:	1,000V AC
Contact Resistance:	10mΩ max.
Current Rating:	5A
Operating Temp. Range:	–55°C to +105°C
Soldering Temp.:	240°C / 3 sec.

MATERIALS AND FINISH

Shell:	Steel, Tin plated
Insulator:	Polyester Resin (glass filled) Fiber reinforced, UL94V-0
Contacts:	Stamped Copper Alloy
Plating:	Gold over Nickel

PART NUMBER

D DP - 04 * * 1

Series

Connector Version:
DP = Dual Port

No. of Contacts (Top / Bottom):
04 = 9 / 15
05 = 9 / 25
06 = 15 / 9
07 = 15/ 25
08 = 25 / 9
09 = 25 / 15

Conector Types (Top / Bottom):
1 = Male / Male
2 = Male / Female
3 = Female / Male
4 = Female / Female

Vertical Distance between Connectors:
S = 15.88mm, M = 19.05mm, L = 22.86mm

Assembly: 1 = With Snap-in 4-40 Clinch Nut (Std.)
2 = 4-40 UNC Threaded

OUTLINE CONNECTOR DIMENSIONS

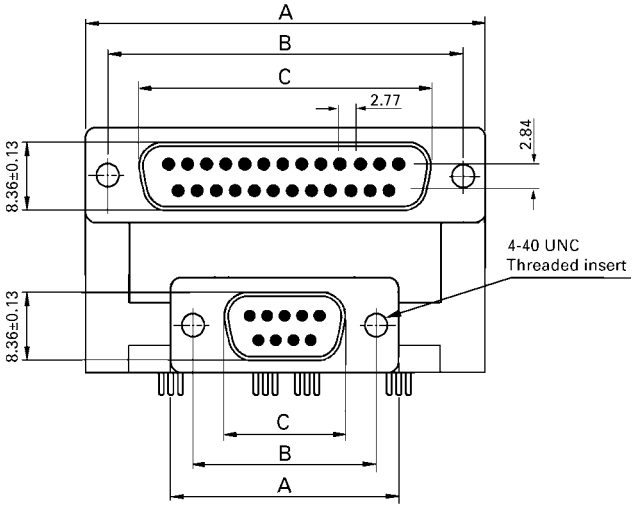

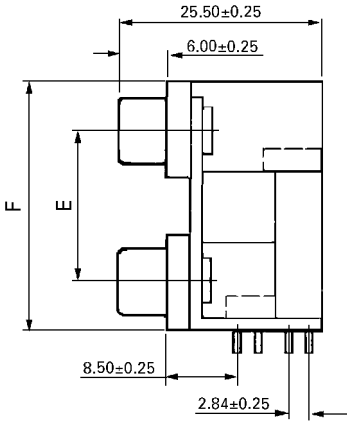

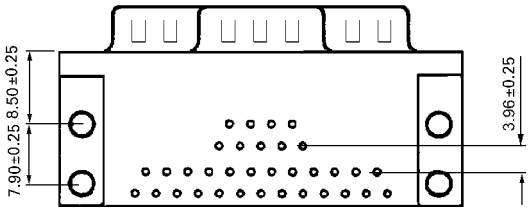

RECOMMENDED PCB LAYOUTS

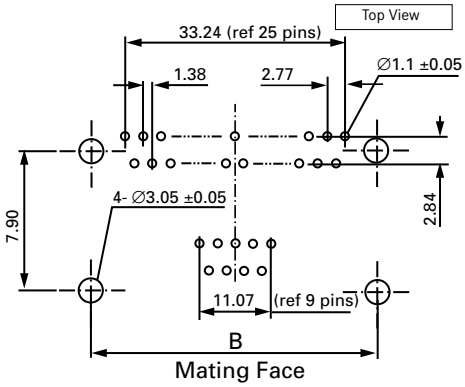

INFO.: The design of these connectors basically refer to DIN 51652

Part Number	No. of Contacts	A	B	C
DDP-04**1	9 / 15	30.81 / 39.14	24.99 / 33.32	16.33 / 24.66
DDP-05**1	9 / 25	30.81 / 53.04	24.99 / 47.04	16.33 / 38.38
DDP-06**1	15 / 9	39.14 / 30.81	33.32 / 24.99	24.66 / 16.33
DDP-07**1	15 / 25	39.14 / 53.04	33.32 /47.04	24.66 / 38.38
DDP-08**1	25 / 9	53.04 / 30.81	47.04 / 24.99	38.38 / 16.33
DDP-09**1	25 / 15	53.04 / 39.14	47.04 / 33.32	38.38 / 24.66

Vertical Distances	E	F
Type S	15.88	28.42
Type M	19.05	31.60
Type L	22.86	35.41

FKC1 TO FKC5

70° Cable Outlet

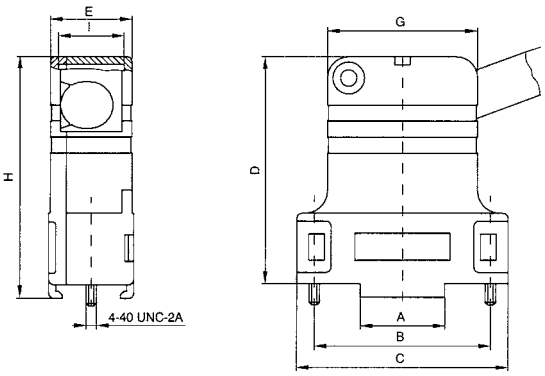

Part Number	A	B	C	D	E	ØF MIN.	ØF MAX.	G	H	I
FKC1	10.0	25.0	31.8	39.3	15.8	3.5	8.6	20.0	41.6	11.6
FKC2	16.0	33.3	41.2	45.5	16.3	3.5	8.6	28.4	47.8	11.6
FKC3	28.0	47.0	54.9	52.5	16.3	4.0	12.0	42.1	54.8	11.6
FKC4	44.4	63.5	71.4	55.0	18.7	6.0	13.0	58.6	57.8	14.0
FKC5	42.0	61.1	69.0	55.0	19.5	6.0	14.0	56.2	57.8	15.0

FKC1G TO FKC5G

180° Cable Outlet

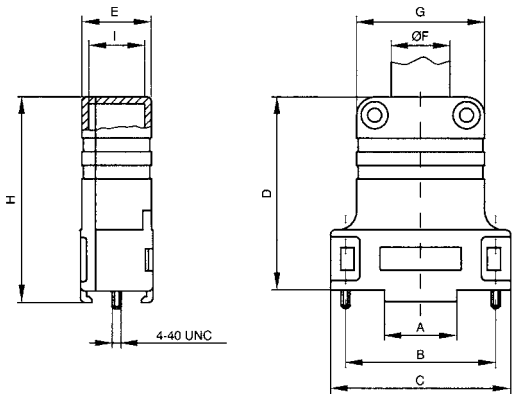

Part Number	A	B	C	D	E	ØF MIN.	ØF MAX.	G	H	I
FKC1G	10.0	25.0	31.8	39.2	17.6	4.0	11.0	20.0	41.6	13.2
FKC2G	16.0	33.3	41.2	45.5	16.3	4.0	11.0	28.4	47.8	11.6
FKC3G	28.0	47.0	54.9	52.5	16.3	4.0	12.0	42.1	54.8	11.6
FKC4G	44.4	63.5	71.4	55.0	18.7	6.0	13.0	58.6	57.8	14.0
FKC5G	42.0	61.1	69.0	55.0	19.5	6.0	14.0	56.2	57.8	15.0

FPHGR-1 TO FPHGR-5

Various Cable Outlets

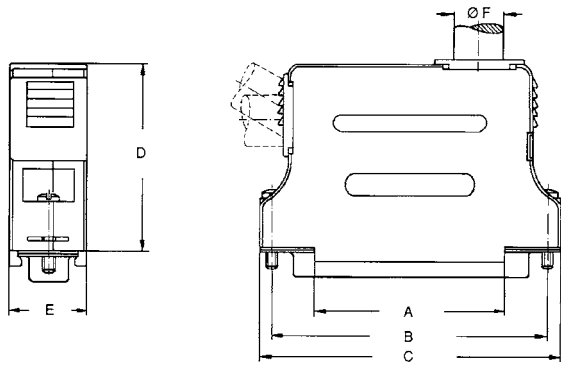

Part Number	No. of Contacts	Cable Outlet	A	B	C	D	E	ØF
FPHGR-1	9	0° / – / –	10.0	25.0	32.2	31.8	15.7	6.5
FPHGR-2	15	0° / – / –	16.1	33.3	39.2	36.9	15.7	11.2
FPHGR-3	25	0° / 60° / 90°	27.8	47.0	53.3	42.2	15.7	11.2
FPHGR-4	37	0° / 60° / 90°	44.4	63.5	69.7	42.2	15.7	11.2
FPHGR-5	50	0° / 60° / 90°	42.0	61.1	67.3	42.2	18.5	14.0

FKH1 TO FKH5

180° Cable Outlet

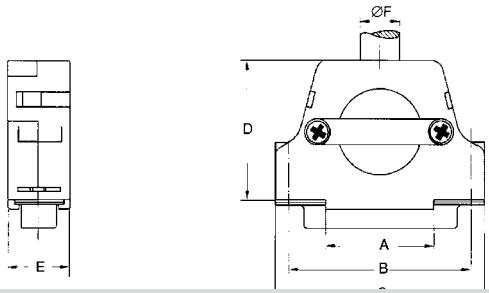

Part Number	No. of Contacts	Cable Outlet	A	B	C	D	E	ØF
FKH1	9	10.0	25.0	31.2	31.8	16.0	8.0	6.5
FKH2	15	16.1	33.3	40.0	32.0	16.0	8.0	11.2
FKH3	25	27.8	47.0	53.4	35.0	16.0	11.3	11.2
FKH4	37	44.4	63.5	70.2	41.0	16.0	11.3	11.2
FKH5	50	42.0	61.1	67.8	41.0	18.5	13.8	14.0

D-SUB (METAL HOOD VARIATIONS)

FMK1G TO FMK5G

180° Cable Outlet

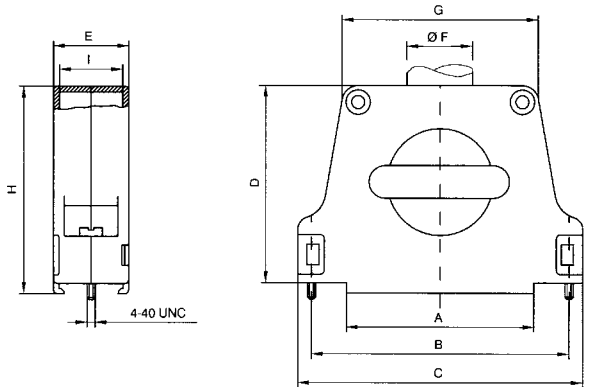

Part Number	A	B	C	D	E	ØF MIN.	ØF MAX.	G	H	I
FMK1G	15.0	25.0	31.8	39.5	15.4	3.0	9.5	20.8	42.4	12.0
FMK2G	16.0	33.3	40.3	41.0	15.4	3.0	8.5	23.3	43.5	12.0
FMK3G	28.0	47.0	54.0	45.0	15.4	3.0	8.5	31.7	47.7	12.0
FMK4G	44.5	63.5	70.2	48.0	18.5	3.0	12.0	48.2	50.4	15.0
FMK5G	42.0	61.1	67.8	48.0	18.5	3.0	12.0	45.8	50.4	15.0

FMK1 TO FMK5

45° Cable Outlet

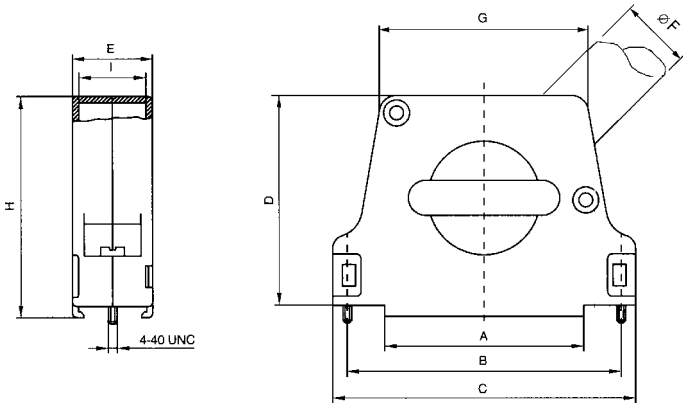

Part Number	A	B	C	D	E	ØF MIN.	ØF MAX.	G	H	I
FMK1	15.0	25.0	31.8	39.5	15.4	3.0	9.5	20.8	42.4	12.0
0FMK2	16.0	33.3	40.3	41.0	15.4	3.0	8.5	23.3	43.5	12.0
FMK3	28.0	47.0	54.0	45.0	15.4	3.0	8.5	31.7	47.7	12.0
FMK4	44.5	63.5	70.2	48.0	18.5	3.0	12.0	48.2	50.4	15.0
FMK5	42.0	61.1	67.8	48.0	18.5	3.0	12.0	45.8	50.4	15.0

SPECIFICATIONS

Insulation Resistance:	50MΩ min. at 250V DC
Withstanding Voltage:	250V AC for 1 minute
Contact Resistance:	30mΩ max.
Rating:	1A max. at 100V AC 2A max. at 12V DC
Operating Temp. Range:	-55°C to +85°C
Mating Cycles:	1000 min. at 10-20 times per minute (no electrical load)
Soldering Temp.:	230°C / 3 sec.

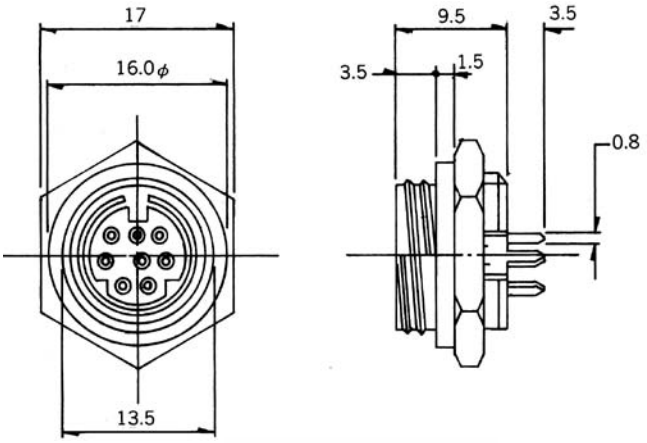

MATERIALS AND FINISH

Housing: Thermoplastic
Contact: Phosphor Bronze

FEATURES

- 180° Pin Through Hole Jam-Nut socket, screw type
- Hex Nut M14, P1.0

CONTACT ARRANGEMENTS AND PCB LAYOUTS

PART NO.: MDIN03G

3 Pins

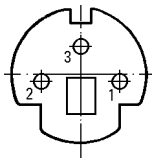

Front View

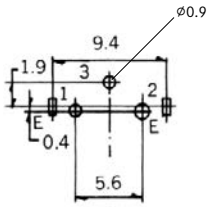

Bottom View

PART NO.: MDIN06G

6 Pins

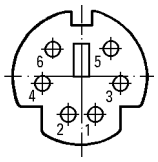

Front View

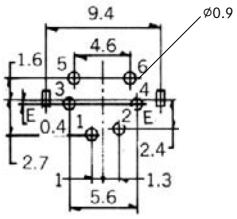

Bottom View

PART NO.: MDIN04G

4 Pins

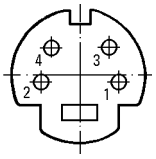

Front View

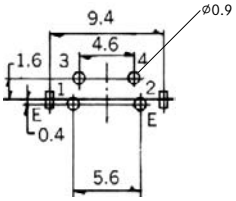

Bottom View

7 Pins

Not Available

PART NO.: MDIN05G

5 Pins

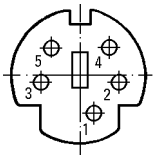

Front View

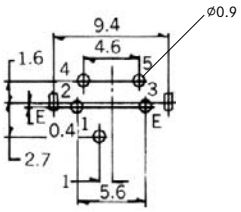

Bottom View

PART NO.: MDIN08G

8 Pins

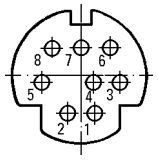

Front View

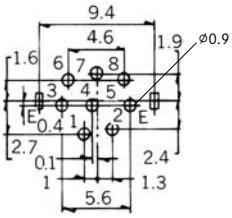

Bottom View

Trading Division

SPECIFICATIONS

Insulation Resistance:	50MΩ min. at 250V DC
Withstanding Voltage:	250V AC for 1 minute
Contact Resistance:	30mΩ max.
Rating:	100V AC / 1A max or 12V DC / 2A max.
Operating Temp. Range:	-55°C to +85°C
Mating Cycles:	1000 min. at 10-20 times per minute (no electrical load)

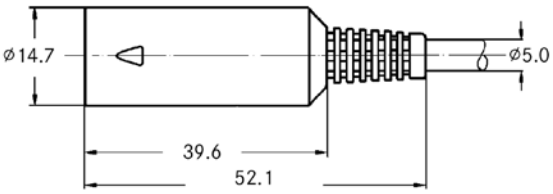

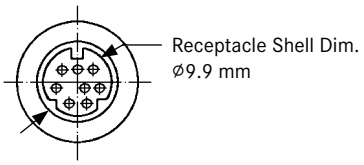

MATERIALS AND FINISH

Housing:	PVC
Shell:	Copper, Nickel Plated
Insulator:	PC, Nylon
Contact:	Copper, Silver plated

FEATURES

- 180° Assembled Receptacle Connector with Solder Cups

CONTACT ARRANGEMENTS

Part No.: MDIN03J

3 Pins

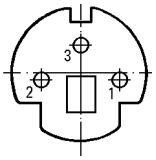

Front View

Part No.: MDIN06J

6 Pins

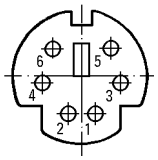

Front View

Part No.: MDIN04J

4 Pins

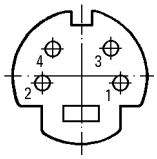

Front View

Part No.: MDIN07J

7 Pins

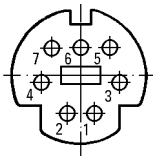

Front View

Part No.: MDIN05J

5 Pins

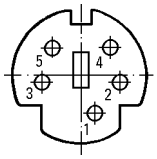

Front View

Part No.: MDIN08J

8 Pins

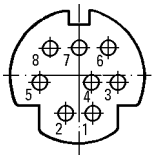

Front View

SPECIFICATIONS

Insulation Resistance:	50MΩ min. at 250V DC
Withstanding Voltage:	250V AC for 1 minute
Contact Resistance:	30mΩ max.
Rating:	1A max. at 100V AC 2A max. at 12V DC
Operating Temp. Range:	-25°C to +80°C
Mating Cycles:	1000 min. at 10-20 times per minute (no electrical load)
Soldering Temp.:	260°C / 10 sec.

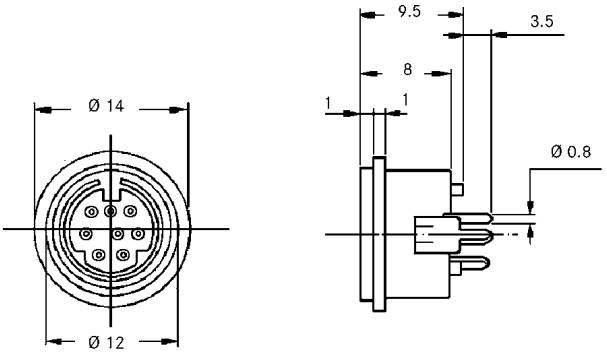

MATERIALS AND FINISH

Housing: Thermoplastic
Contact: Phosphor Bronze, Silver Plating

FEATURES

- 180° Pin Through Hole Socket
- Minimum ordering quantity is 1,000 pcs

CONTACT ARRANGEMENTS AND PCB LAYOUTS

PART NO.: MDIN03K

3 Pins

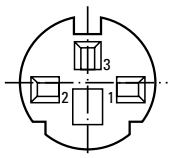

Front View

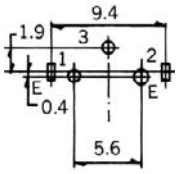

Bottom View

PART NO.: MDIN06K

6 Pins

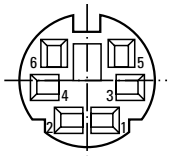

Front View

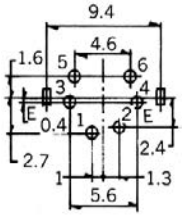

Bottom View

PART NO.: MDIN04K

4 Pins

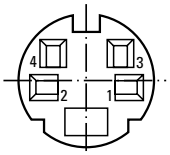

Front View

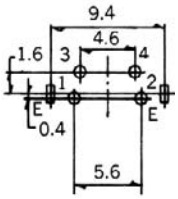

Bottom View

7 Pins

Not Available

PART NO.: MDIN05K

5 Pins

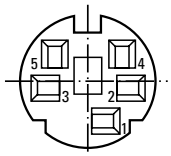

Front View

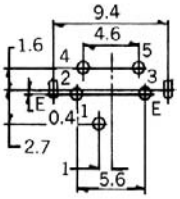

Bottom View

PART NO.: MDIN08K

8 Pins

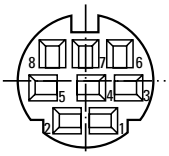

Front View

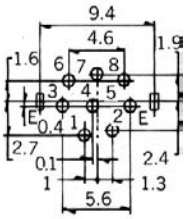

Bottom View

Trading Division

SPECIFICATIONS

Insulation Resistance:	50MΩ min. at 250V DC
Withstanding Voltage:	250V AC for 1 minute
Contact Resistance:	30mΩ max.
Rating:	1A max. at 100V AC 2A max. at 12V DC
Operating Temp. Range:	-55°C to +85°C
Mating Cycles:	1,000 min. at 10-20 times per minute (no electrical load)
Soldering Temp.:	260°C / 10 sec.

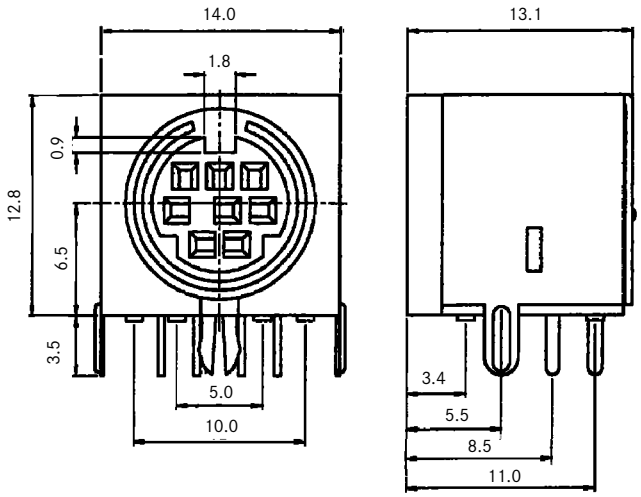

MATERIALS AND FINISH

Housing: Thermoplastic
Contact: Phosphor Bronze

FEATURES

- 90° Pin Through Hole Receptacle (shielded)
- Minimum ordering quantity is 1,000 pcs

CONTACT ARRANGEMENTS AND PCB LAYOUTS

PART NO.: MDIN03SS

3 Pins

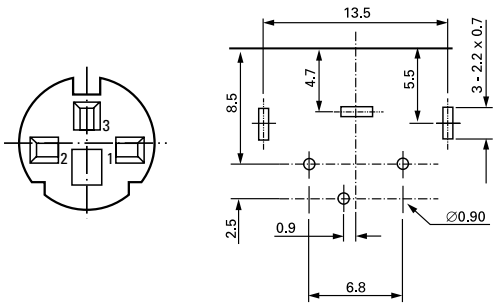

Front View Bottom View

PART NO.: MDIN06SS

6 Pins

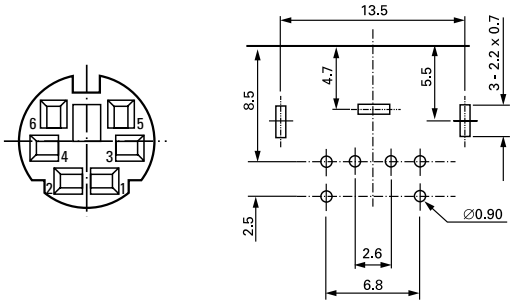

Front View Bottom View

PART NO.: MDIN04SS

4 Pins

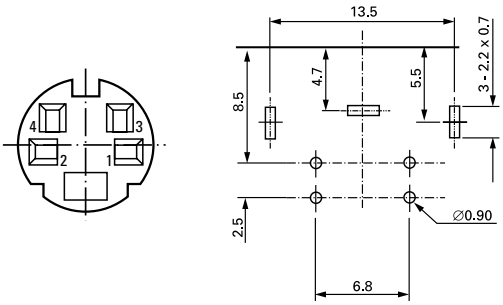

Front View Bottom View

PART NO.: MDIN07SS

7 Pins

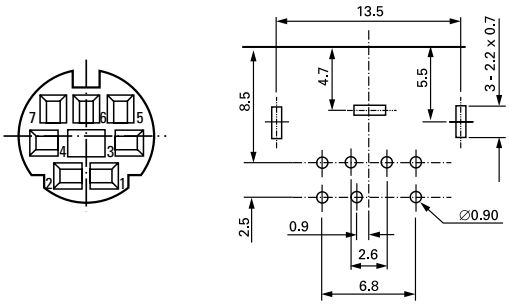

Front View Bottom View

PART NO.: MDIN05SS

5 Pins

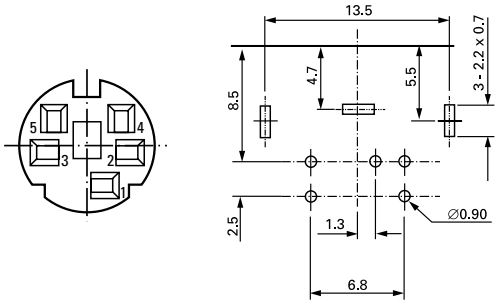

Front View Bottom View

PART NO.: MDIN08SS

8 Pins

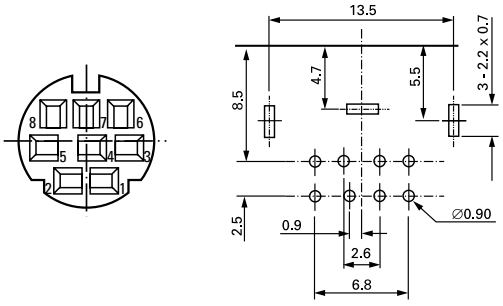

Front View Bottom View

SPECIFICATIONS

Insulation Resistance:	50MΩ min. at 500V DC
Withstanding Voltage:	500V AC for 1 minute
Contact Resistance:	30mΩ max.
Rating:	2A max. at 12V DC
Operating Temp. Range:	-55°C to +85°C
Mating Cycles:	1000 min. at 10-20 times per minute (no electrical load)

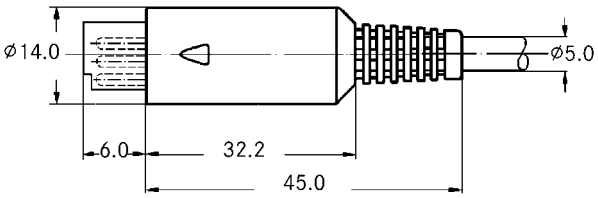

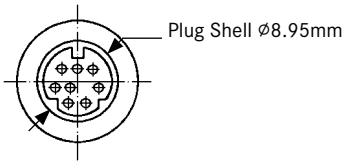

MATERIALS AND FINISH

Housing:	PE
Shield:	Brass, Nickel Plated
Insulator:	Nylon 66
Contact:	Brass, Silver plated

FEATURES

- Strain relief is included in the assembly parts

CONTACT ARRANGEMENTS

PART NO.: MDIN03P/POT

3 Pins

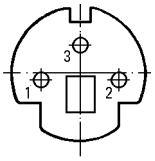

Front View

PART NO.: MDIN06P/POT

6 Pins

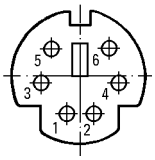

Front View

PART NO.: MDIN04P/POT

4 Pins

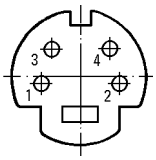

Front View

PART NO.: MDIN07P/POT

7 Pins

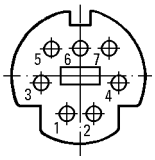

Front View

PART NO.: MDIN05P/POT

5 Pins

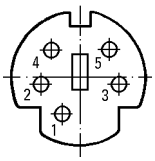

Front View

PART NO.: MDIN08P/POT

8 Pins

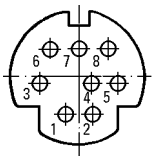

Front View

SPECIFICATIONS

Insulation Resistance: 2MOhm min. at 300V DC (AWG26 w/o UL)
Dielectric Strength: 300V AC for 1 minute (AWG26 w/o UL)

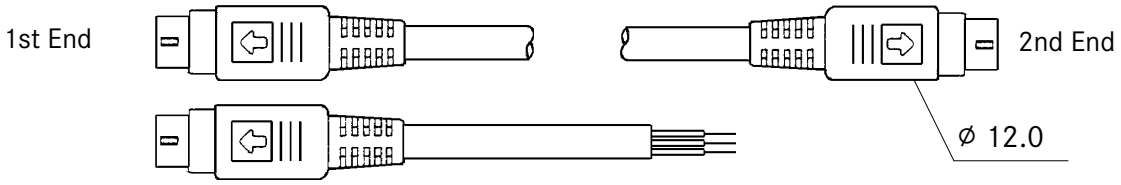

ORDERING CODE

CTMD 5 P – 5 J 1 S AO 1500

- MiniDIN Cable Assembly
- Pin Count (1st End): 3,4,5,6,7,8 and 9
- Connector Type (1st End):
  P = Male
  J = Female
- Pin Count (2nd End): 3,4,5,6,7,8 and 9
  0 = Open End
- Connector Type (2nd End):
  P = Male
  J = Female
  O = Open End (Cut Off)
  V = Open End, Jacket Stripped 40mm, Wire Ends Twisted and Tinned 5mm
- Housing Types (See Drawings Below):
  1 = Type 1 (Standard)
  4 = Type 4
  5 = Type 5 (Male with 3 to 8 pins and Female with 8 pins only)
- Colour Code:
  S = Black (Standard) G = Grey B = Beige
- Cable (Shielding and UL-Approval):
  AO = AWG26 (Standard) with Alu-foil, without UL-Approval
  AX = AWG24 or AWG28 with Alu-foil, without UL-Approval
  AU = AWG24, 26 or 28 with Alu-foil, with UL-Approval
  CU = AWG24, 26 or 28 with Cu braided Shield and with Alu-foil, with UL-Approval
  OO = AWG 24, 26 or 28 Unshielded, without UL-Approval

  Info: Shielded cabels always come with Drain Wire!
  OO = Minimum Ordering Length for Cable is 3,000 meters
  All others = Minimum Ordering Length for Cable 1,000 meters
- Overall Length

HOUSING TYPES

Type 1 (Moulded)

Round Type (std.)

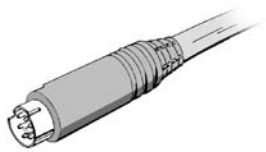

Male or Female
3 to 9 pins
Min. Order Qty. 100 pcs.

Type 4 (Moulded)

Conical Type

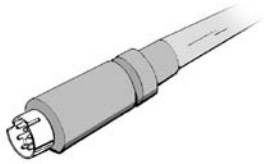

Male or Female
3 to 9 pins
Min. Order Qty. 100 pcs.

Type 5 (Mounted)

Quick Lock Housing

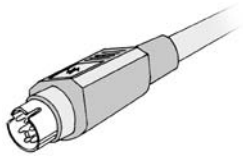

Male 3 to 8 pins
Female 8 pins only
Min. Order Qty. 100 pcs.

SPECIFICATIONS

Insulation Resistance:	50MΩ min. at 250V DC
Withstanding Voltage:	250V AC for 1 minute
Contact Resistance:	30mΩ max.
Current Rating:	3 Pin Socket: Pins #1 and #2 - 7.5A max. at 20V DC
	Pin #3 - 1A max. at 20V DC
	4 Pin Socket: All Pins - 5A max. at 20V DC
Operating Temp. Range:	-55°C to +85°C
Mating Cycles:	1000 min. at 10 - 20 times per minute (no electrical load)
Soldering Temp.:	230°C / 3 sec.

MATERIALS AND FINISH

Housing: Thermoplastic
Contact: Phosphor Bronze

FEATURES

- 90° Pin Through Hole Receptacle (shielded and unshielded)
- Minimum ordering quantity is 1,000 pcs.

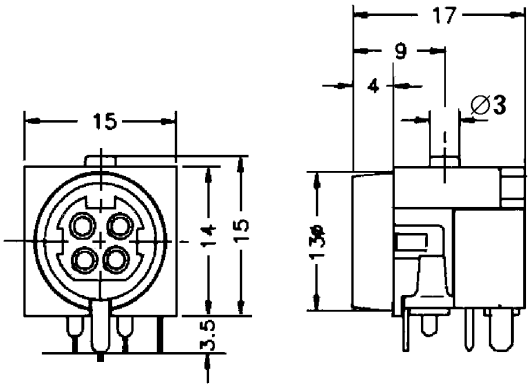

SP-Type
Without Shielding

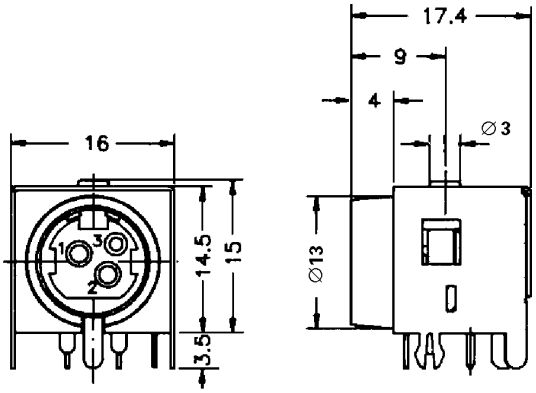

SSP-Type
With Shielding

CONTACT ARRANGEMENT AND PCB LAYOUTS

PART NO.: MDIN03SP

3 Pins

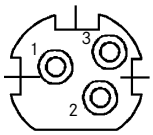

Front View

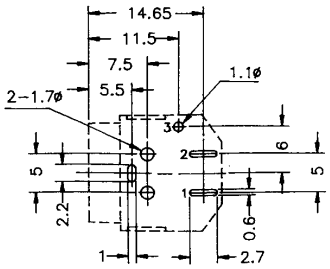

Bottom View

PART NO.: MDIN03SSP

3 Pins

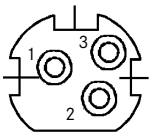

Front View

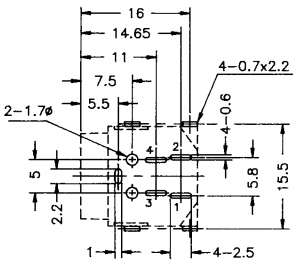

Bottom View

PART NO.: MDIN04SP

4 Pins

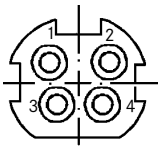

Front View

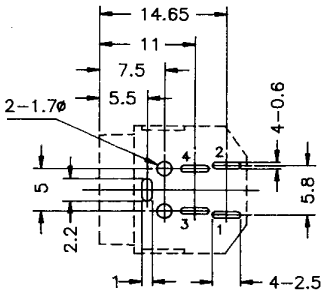

Bottom View

PART NO.: MDIN04SSP

4 Pins

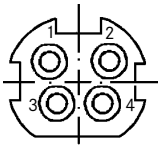

Front View

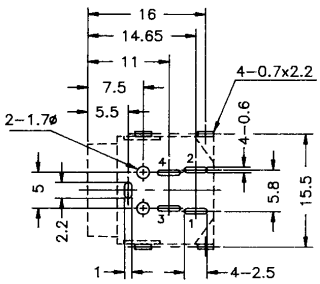

Bottom View

Trading Division

SPECIFICATIONS

Insulation Resistance:	50MΩ min. at 250V DC
Withstanding Voltage:	250V AC for 1 minute
Contact Resistance:	30mΩ max.
Current Rating:	3 Pin Socket: Pins #1 and #2 - 7.5A max. at 20V DC Pin #3 - 1A max. at 20V DC 4 Pin Socket: All Pins - 5A max. at 20V DC
Operating Temp. Range:	-55°C to +85°C
Mating Cycles:	1000 min. at 10-20 times per minute (no electrical load)

MATERIALS AND FINISH

Housing:	Thermoplastics
Contact:	Brass, Silver Plated

FEATURES

- Power Plugs with Solder Cups (3 and 4 pins)
- Only as cable assembly available (ordering procedure see next page)
- With locking mechanism

STANDARD TYPE (PP)

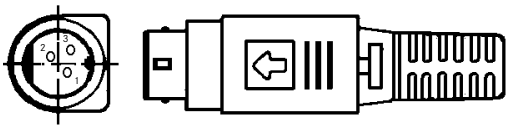

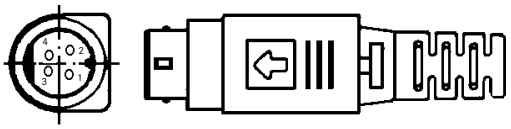

CONTACT ARRANGEMENTS

PART NO.: MDIN03PP

3 Pins

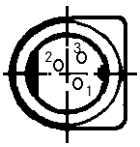

Front View

PART NO.: MDIN04PP

4 Pins

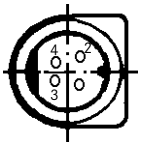

Front View

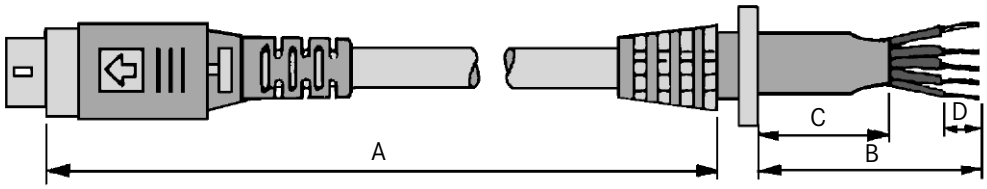

ORDERING CODE

CTMD 03PP 04 LG 200 – 20 – 8 – 4 T

- MiniDIN Cable Assembly
- Pin Layout (see Power Plug (PP) page
  03PP 04PP
- Rubber Sleeves (See Drawing Below):
  (–) = No Sleeve, Minimum Order 1,000 meters
  Type 00 Minimum Order 1,000 meters
- Colour Code:
  LG = Light Grey G = Grey B = Black (standard)
- Dimension 'A'
- Dimension 'B'
- Dimension 'C'
- Dimenesion 'D'
- T = Tinned Wire Ends

AVAILABLE RUBBER SLEEVE

Type 00

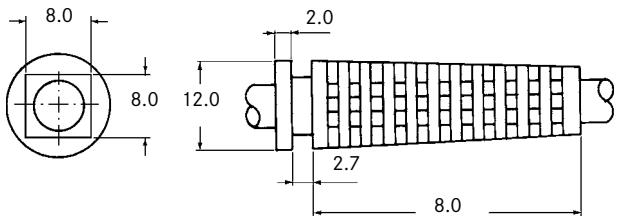

Trading Division

GENERAL SPECIFICATIONS FOR LJE SERIES

Insulation Resistance:	100MΩ min. at 500 V DC
Withstanding Voltage:	500 V AC for 1 minute
Contact Resistance:	30mΩ max. (initial)
Soldering Heat Test:	260 ±5°C for 5±1 seconds
Insertion Force:	0.3 to 2.0 Kg
Extraction Force:	0.3 to 2.0 Kg
Mating Cycles:	5,000 times

MATING PLUGS FOR LJE SERIES (TH EARPHONE JACKS)

ø 2.5mm

Mono

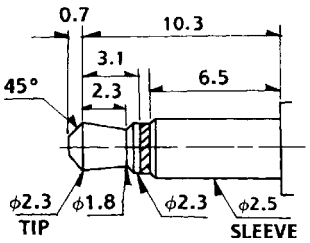

ø 3.5mm

Mono

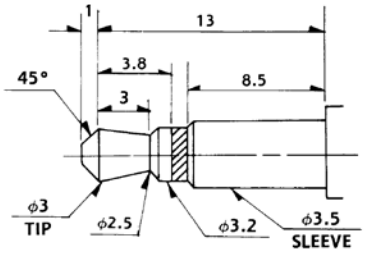

ø 2.5mm

Stereo

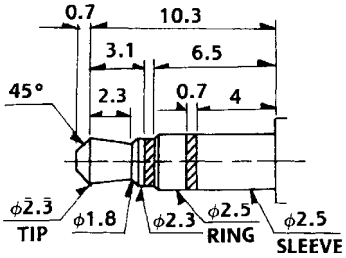

ø 3.5mm

Stereo

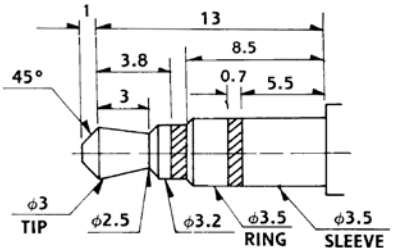

LJE0252-B

LJE0252-* (STEREO)

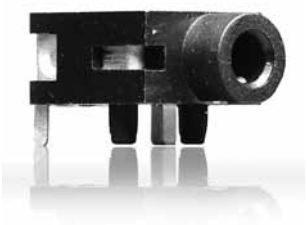

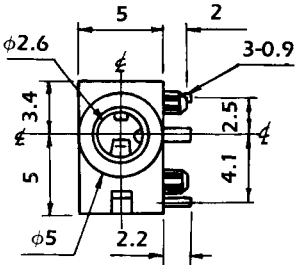

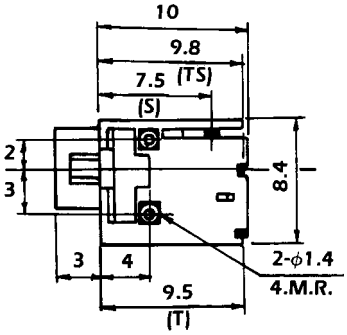

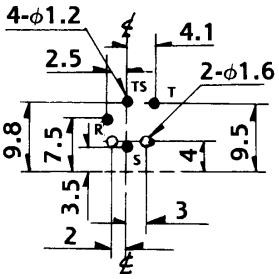

PCB-Layout (Bottom View)

PART NO. (DETAILS)

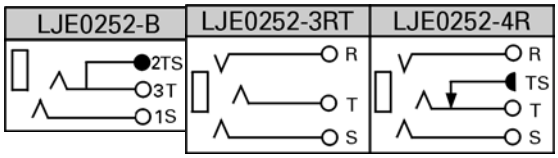

LJE0357-B

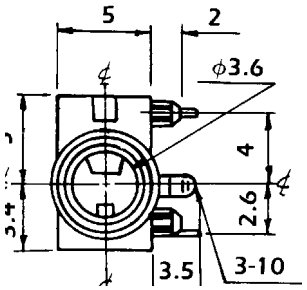

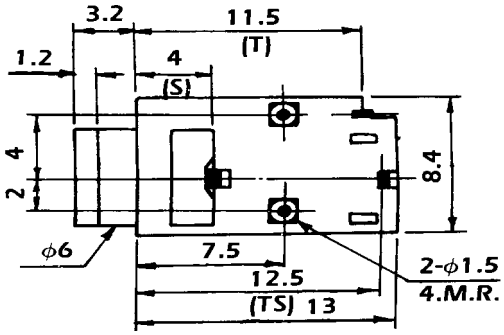

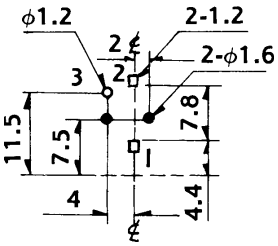

PCB-Layout (Bottom View)

PART NO. (DETAILS)

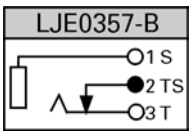

LJE0357-3RT (STEREO)

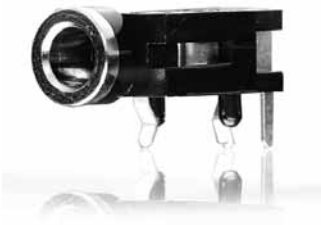

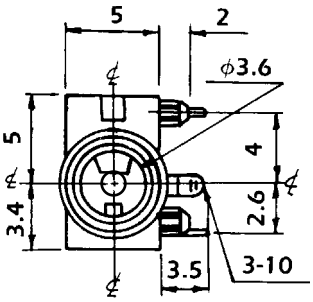

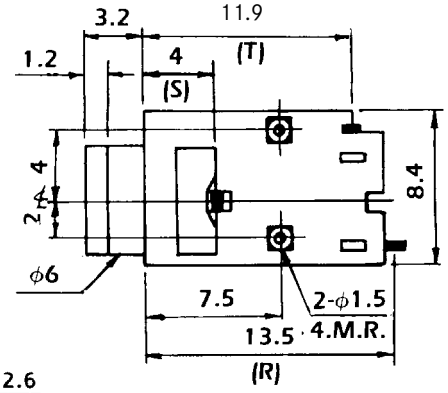

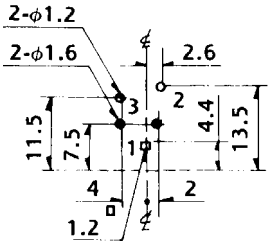

PCB-Layout (Bottom View)

Part No. (Details)

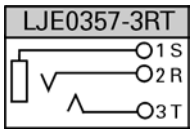

LJE0366AS-5

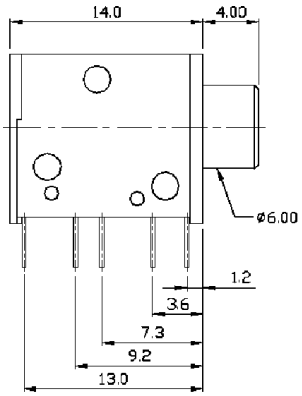

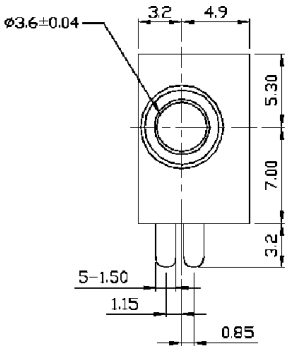

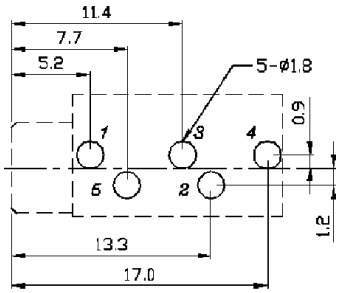

PCB-Layout (Bottom View)

PART NO. (DETAILS)

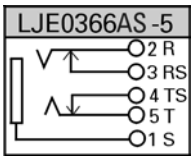

Trading Division

LJE0359AM3RT (W/O THREAD)
LJE0359M3RT (WITH THREAD)

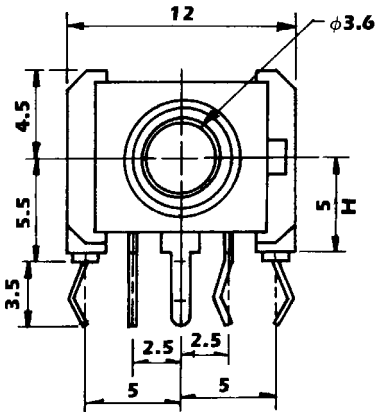

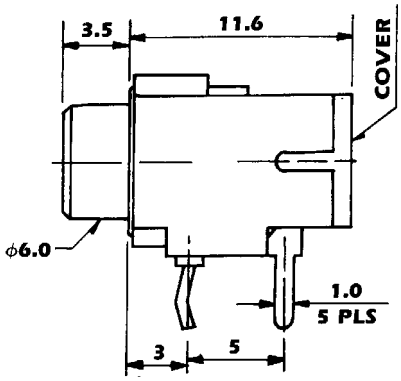

PCB-Layout (Bottom View)

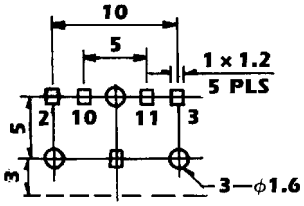

PART NO. (DETAILS)

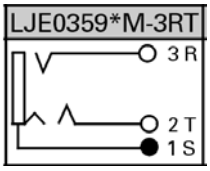

LJE0361-*

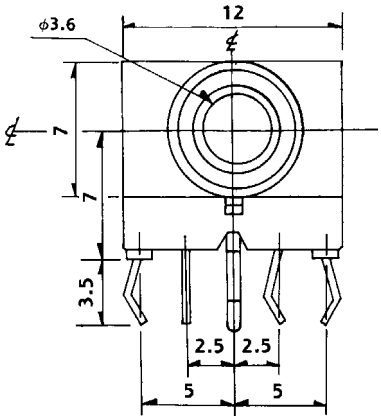

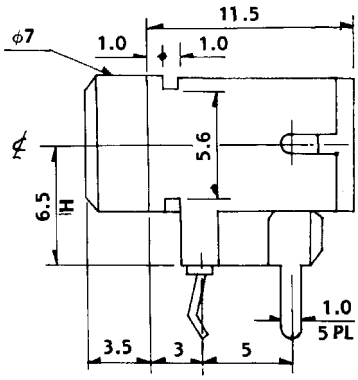

PCB-Layout (Bottom View)

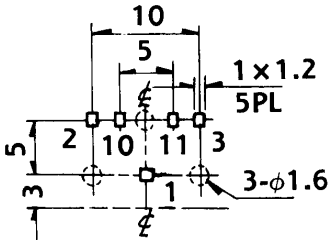

PART NO. (DETAILS)

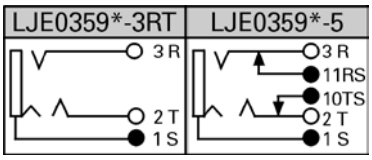

LJE0364-*

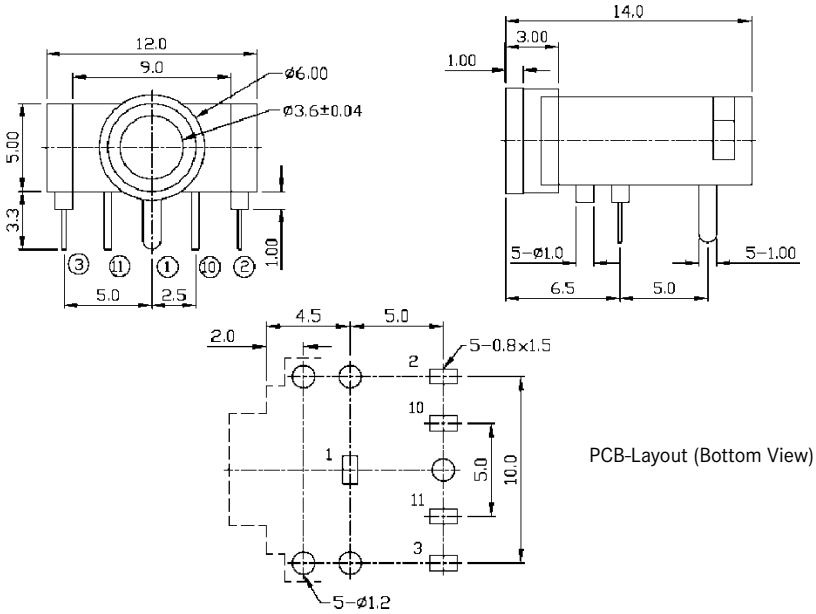

PCB-Layout (Bottom View)

PART NO. (DETAILS)

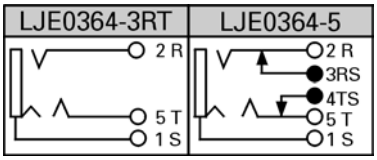

LJE3531 (STEREO)

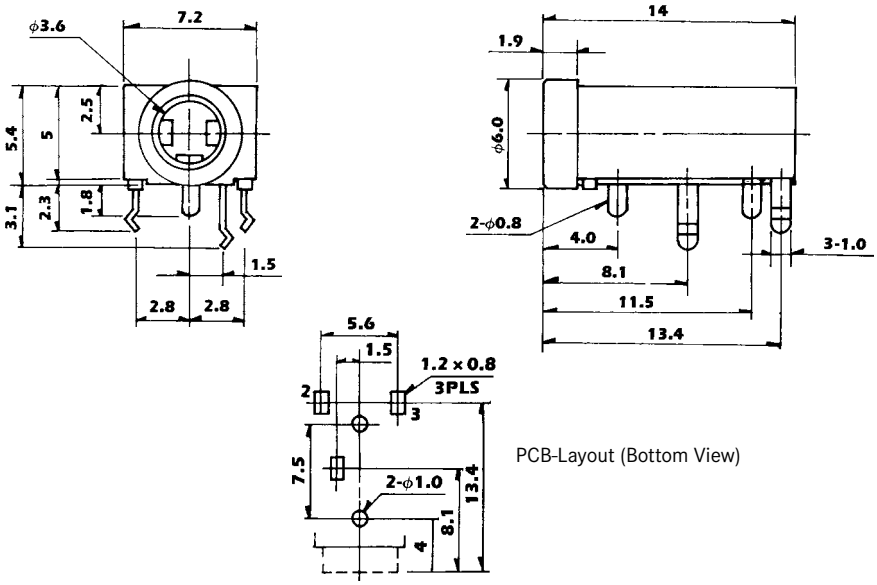

PCB-Layout (Bottom View)

PART NO. (DETAILS)

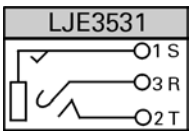

Trading Division

GENERAL SPECIFICATIONS FOR AJ SERIES

Insulation Resistance:	100MΩ min. at 500 V DC
Withstanding Voltage:	500 V AC for 1 minute
Contact Resistance:	50mΩ max. (initial)
Soldering Temp.:	220°C / 60 sec., 260°C peak
Insertion Force:	0.3 to 2.0 Kg
Extraction Force:	0.3 to 2.0 Kg
Mating Cycles:	5,000 times

MATING PLUGS FOR AJ SERIES (SMT EARPHONE JACKS)

ø 2.5mm

Mono

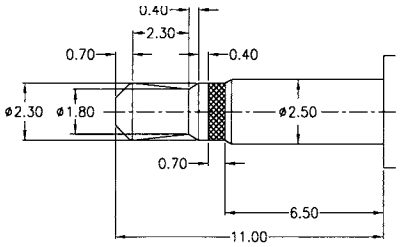

ø 3.5mm

Mono

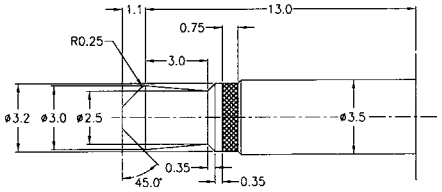

ø 2.5mm

Stereo

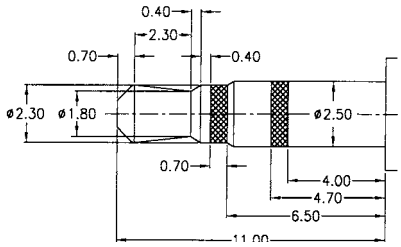

ø 3.5mm

Stereo

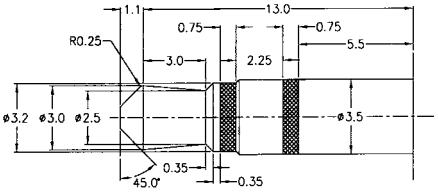

AJ406-3-SMT

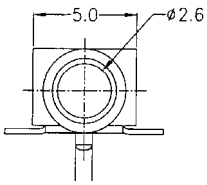

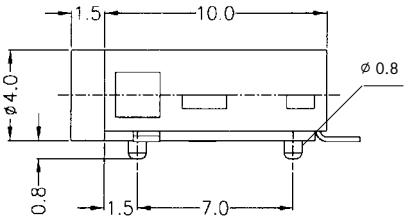

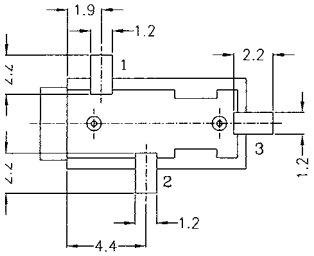

PCB-Layout (Bottom View)

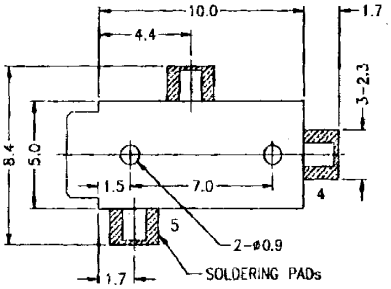

Pad Layout (mouting side)

PART NO. (DETAILS)

AJ403-*-SMT

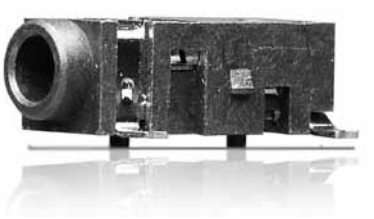

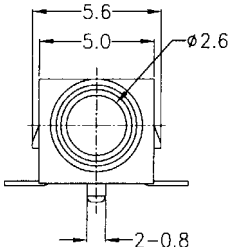

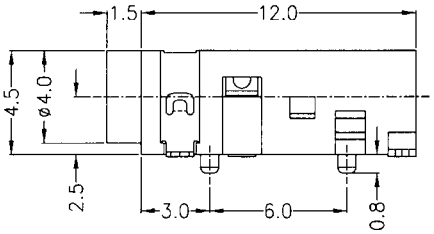

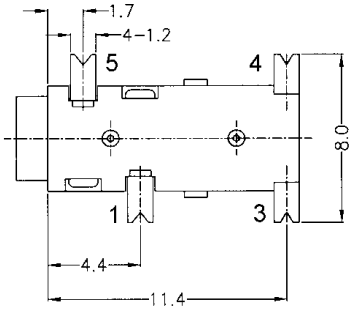

PCB-Layout (Bottom View)

PART NO. (DETAILS)

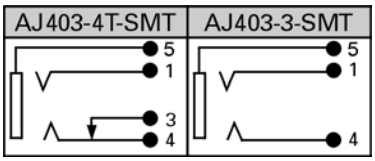

AJ404-*-SMT

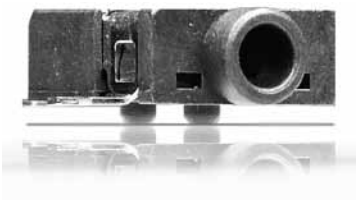

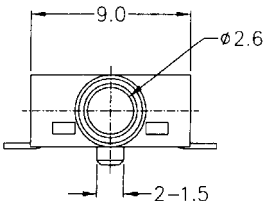

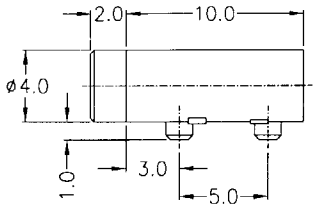

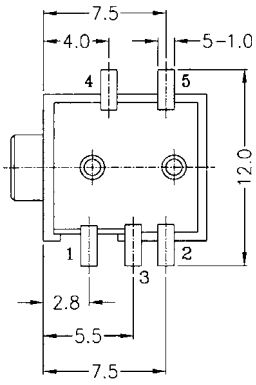

PCB-Layout (Bottom View)

PART NO. (DETAILS)

Trading Division

AJ330-*-SMT

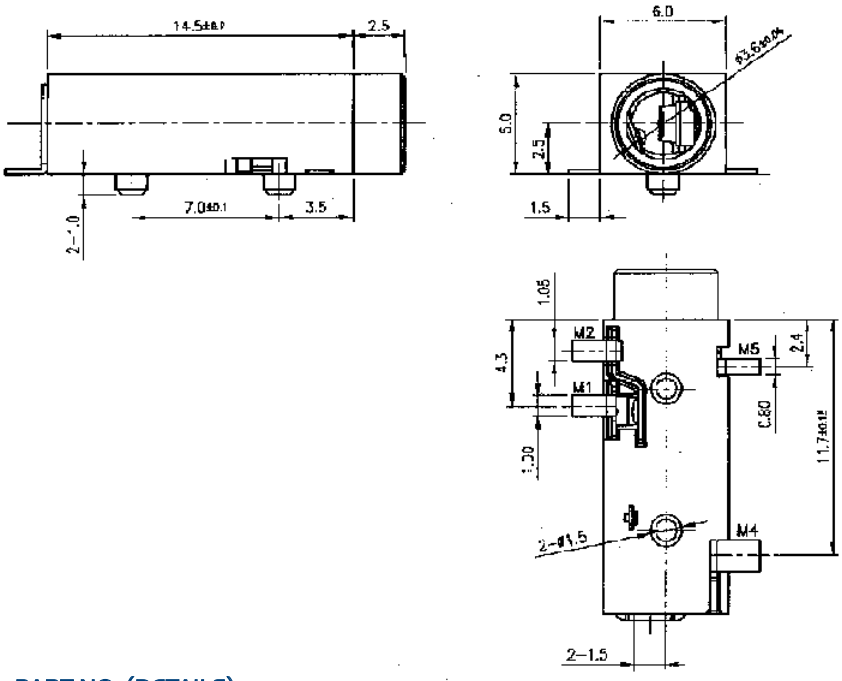

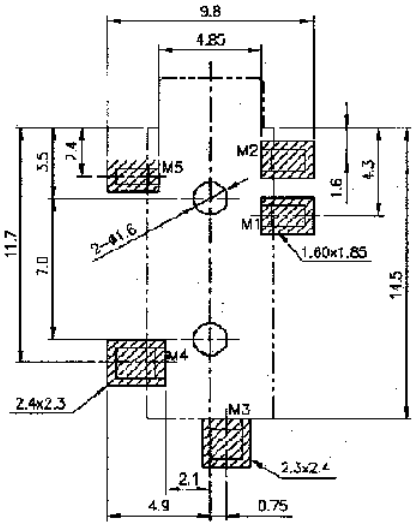

PCB-Layout (Top View)

PART NO. (DETAILS)

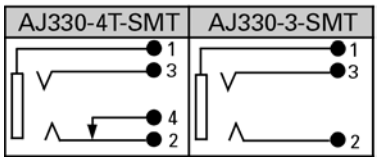

AJ332-*-SMT

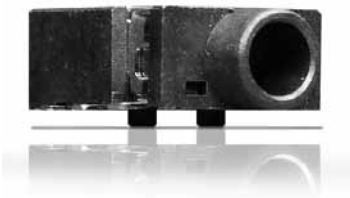

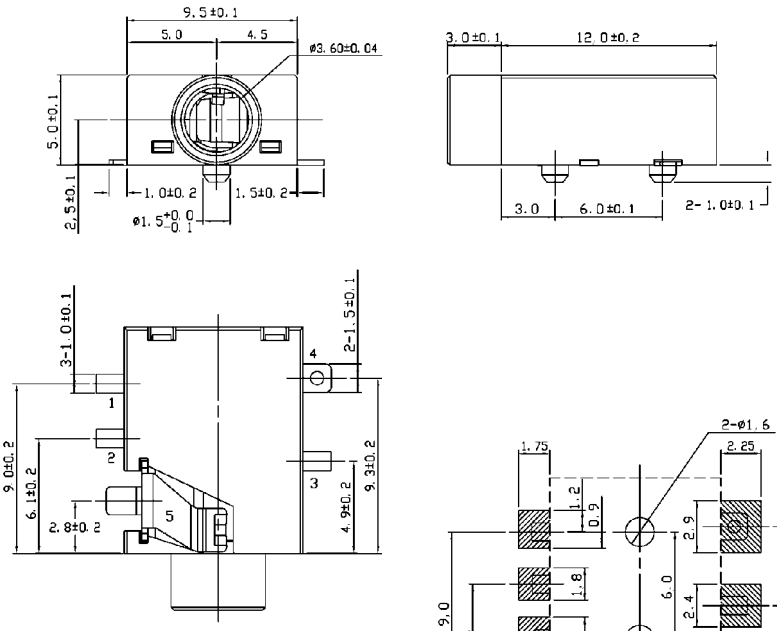

PCB-Layout (Mounting Side)

PART NO. (DETAILS)

TS**

MATERIALS AND FINISH

Standard material: Glass filled polyester (UL94V-0)
Standard color: Black
Contact: Thickness 0.35mm Alloy C5210,
Gold plating over Nickel (contact area)
Tin Plating over Nckel (solder area)

PCB-Layout (Top View)

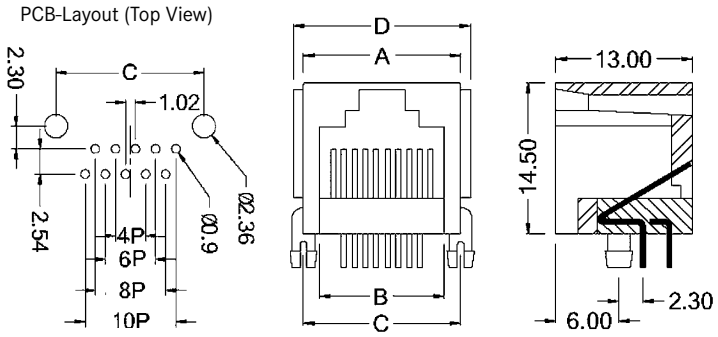

* Depopulation of contacts possible

Part Number	No. of Positions	A	B	C	D
TS4*	4	10.00	7.85	10.00	12.00
TS6*	6	12.20	9.90	12.00	14.20
TS8*	8	15.00	11.85	15.00	16.90
TS10*	10	15.00	11.85	15.00	16.90

TS2K**

PCB-Layout (Top View)

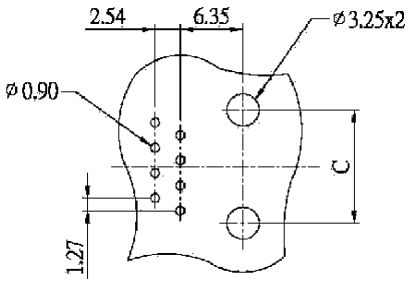

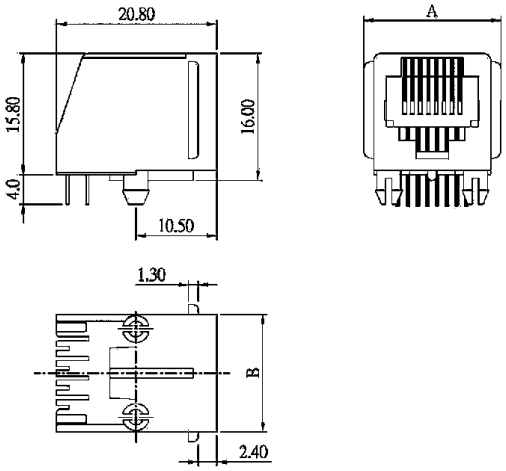

* Depopulation of contacts possible

Part Number	No. of Positions	A	B	C
TS2K4*	4	13.70	11.20	7.70
TS2K6*	6	15.75	13.20	9.90
TS2K8*	8	17.70	15.20	11.95

TS2K**-C

PCB-Layout (Top View)

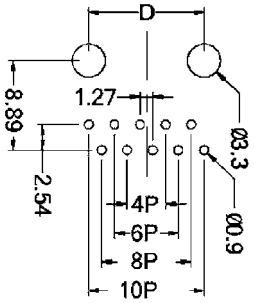

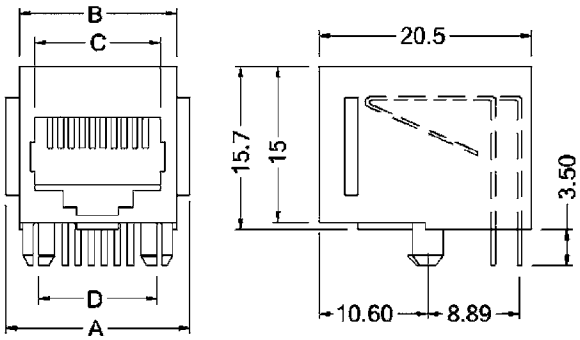

* Depopulation of contacts possible

Part Number	No. of Positions	A	B	C	D
TS2K4*-C	4	13.70	11.20	7.70	7.62
TS2K6*-C	6	15.75	13.20	9.90	10.16
TS2K8*-C	8	17.70	15.20	11.95	11.43
TS2K10*-C	10	17.70	15.20	11.95	11.43

TS3K**

MATERIALS AND FINISH

Standard material: Glass filled polyester (UL94V-0)
Standard color: Black
Contact: Thickness 0.35mm Alloy C5210,
Gold plating over Nickel (contact area)
Tin Plating over Nickel (solder area)

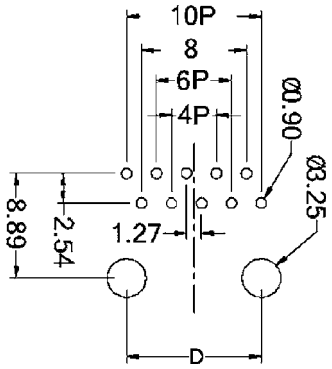

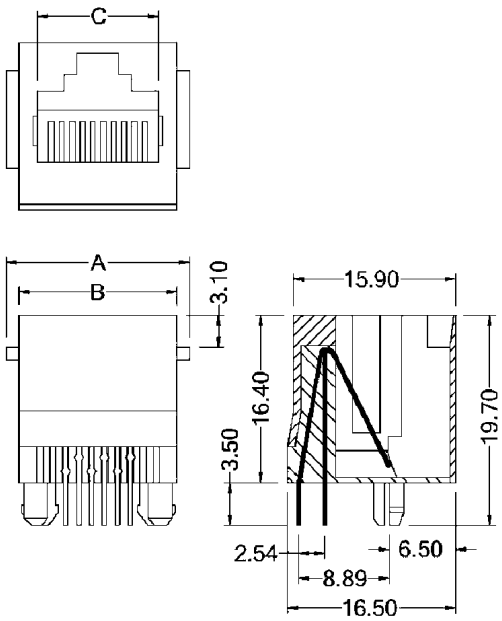

* Depopulation of contacts possible

Part Number	No. of Positions	A	B	C	D
TS3K4*	4	13.97	11.43	7.90	7.62
TS3K6*	6	16.00	13.46	10.00	10.16
TS3K8*	8	18.03	15.49	11.90	11.43
TS3K10*	10	18.03	15.49	11.90	11.43

TS6K**-A

MATERIALS AND FINISH

Standard material: Glass filled polyester (UL94V-0)
Standard color: Black
Soldering Temp.: 240°C / 5 sec.
Contact: Thickness 0.35mm Alloy C5210,
Gold plating over Nickel (contact area)
Tin Plating over Nickel (solder area)

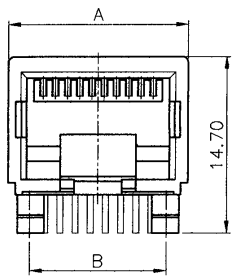

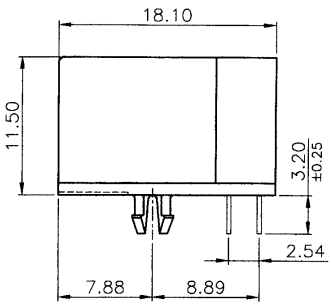

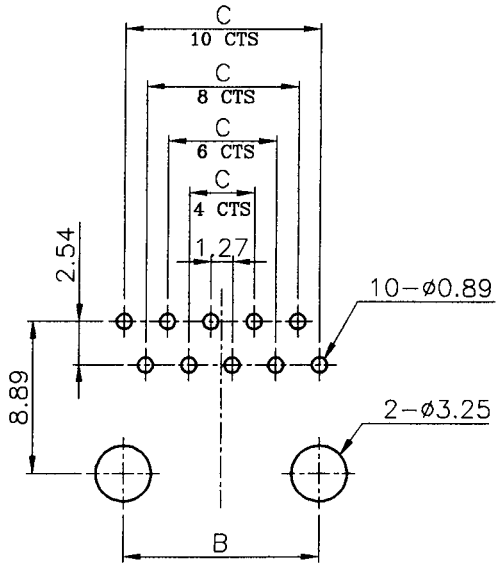

PCB-Layout (Top View)

* Depopulation of contacts possible

Part Number	No. of Positions	A	B	C
TS6K4*-A	4	11.21	7.62	3.81
TS6K6*-A	6	12.96	10.16	6.35
TS6K8*-A	8	15.00	11.43	8.89
TS6K10*-A	10	15.00	11.43	11.43

TS6K**-C

MATERIALS AND FINISH

Standard material: Glass filled polyester (UL94V-0)
Standard color: Black
Contact: Thickness 0.35mm Alloy C5210,
Gold plating over Nickel (contact area)
Tin plating over Nickel (solder area)

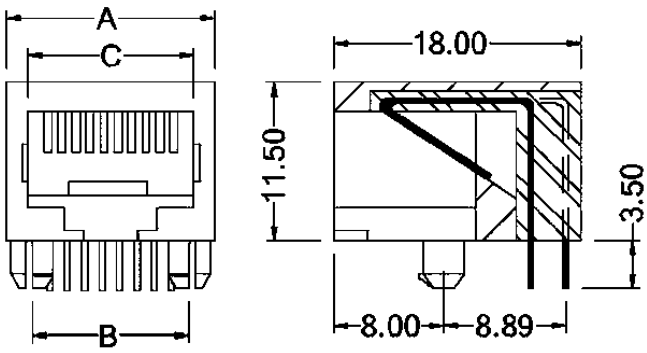

PCB-Layout (Top View)

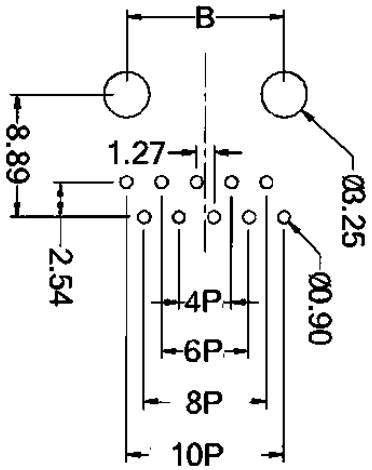

* Depopulation of contacts possible

Part Number	No. of Positions	A	B	C	D
TS6K4*-C	4	11.20	7.62	7.80	12.00
TS6K6*-C	6	13.20	10.16	10.00	14.20
TS6K8*-C	8	15.20	11.43	12.00	16.90
TS6K10*-C	10	15.20	11.43	12.00	16.90

TS6K**-S (SMT WITH SIDE ENTRY)

MATERIALS AND FINISH

Standard material: Glass filled polyester (UL94V-0)
Standard color: Black
Contact: Thickness 0.35mm Alloy C5210,
Gold plating over Nickel (contact area)
Tin plating over Nickel (solder area)

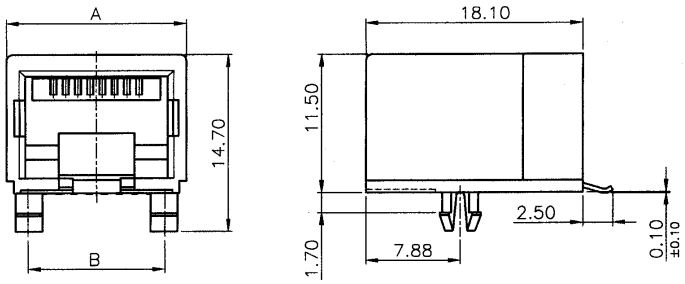

PCB-Layout (Top View)

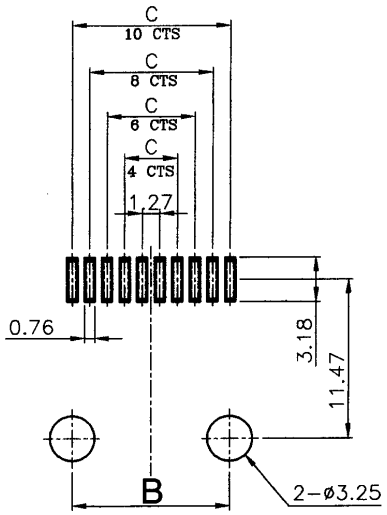

* Depopulation of contacts possible

Part Number	No. of Positions	A	B	C
TS6K4*-S	4	11.20	7.62	3.81
TS6K6*-S	6	12.96	10.16	6.35
TS6K8*-S	8	15.00	11.43	8.89
TS6K10*-S	10	15.00	11.43	11.43

TS3046-881-LED-YG

8P8C RJ45 JACK WITH YELLOW/ GREEN LED, UNSHIELDED

MATERIALS AND FINISH

Jack Body: Engineering Thermoplastic, black, UL94V-0
Contact: Phosphor Bronze
Contact area - Gold plating over Nickel
Solder area - Tin plating over Nickel

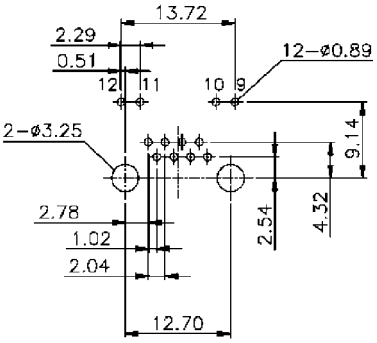

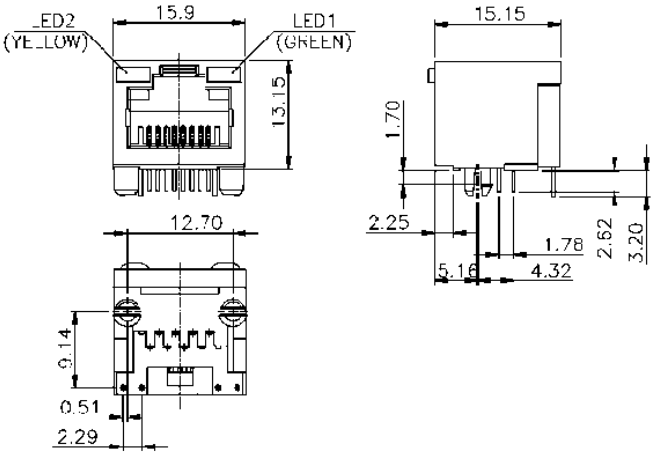

TS3022-8821

8P8C RJ45 DOUBLE STACK, UNSHIELDED

MATERIALS AND FINISH

Jack Body: Engineering Thermoplastic, black, UL94V-0
Contact: Phosphor Bronze
Contact area - Gold plating over Nickel
Solder area - Tin plating over Nickel

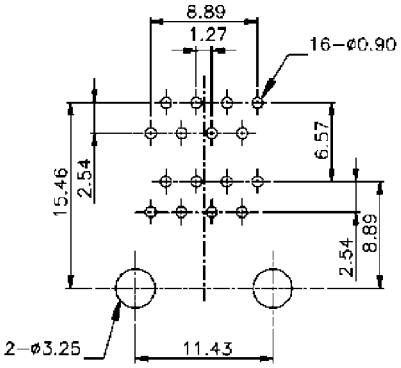

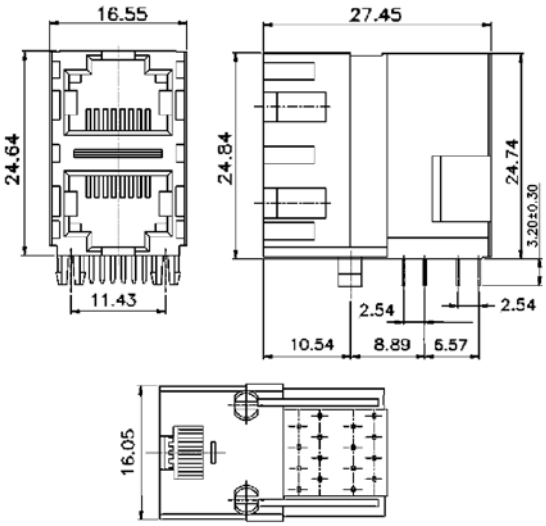

TS3022-8824

8P8C RJ45 DOUBLE STACK MULTIPORT JACK, UNSHIELDED

MATERIALS AND FINISH

Jack Body: Engineering Thermoplastic, black, UL94V-0
Contact: Phosphor Bronze
Contact area - Gold plating over Nickel
Solder area - Tin plating over Nickel

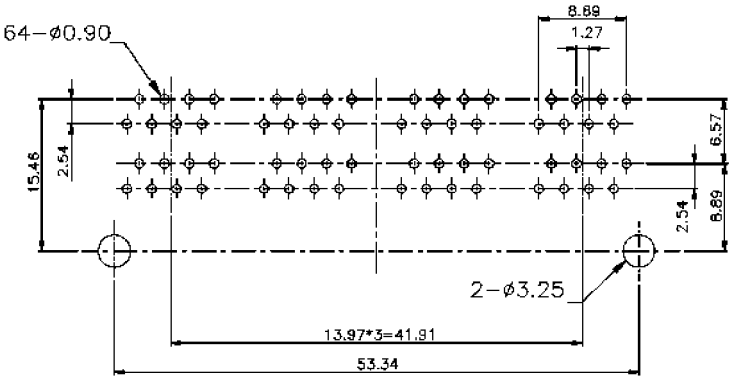

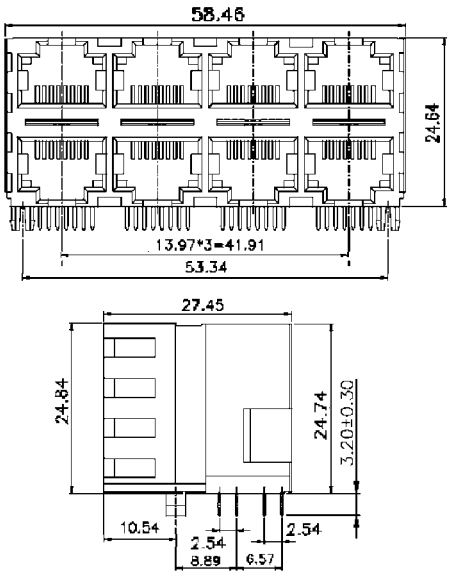

TS3046S-881-LED-YG

P8C RJ45 JACK WITH YELLOW/ GREEN LED, SHIELDED

MATERIALS AND FINISH

Jack Body: Engineering Thermoplastic, black, UL94V-0
Contact: Phosphor Bronze
Contact area - Gold plating over Nickel
Solder area - Tin plating over Nickel

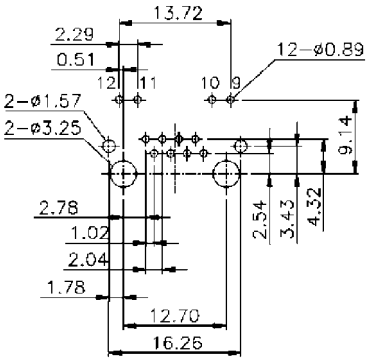

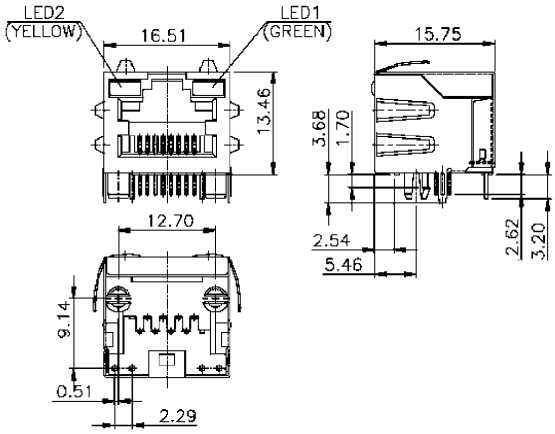

TS3070S-881-M-LED-YG

8P8C RJ45 JACK WITH MAGNETIC AND YELLOW/ GREEN LED, SHIELDED

MATERIALS AND FINISH

Shield: Brass, Nickel plating
Jack Body: High Temp. Thermoplastic, black, UL94V-0
Contact: Phosphor Bronze
Contact area - Gold plating over Nickel
Solder area - Tin plating over Nickel

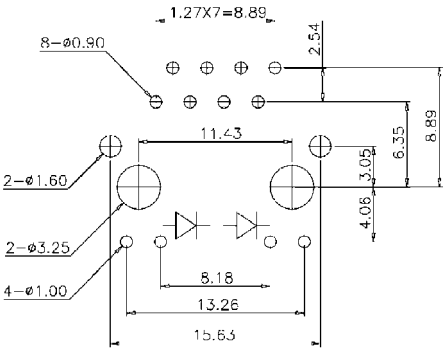

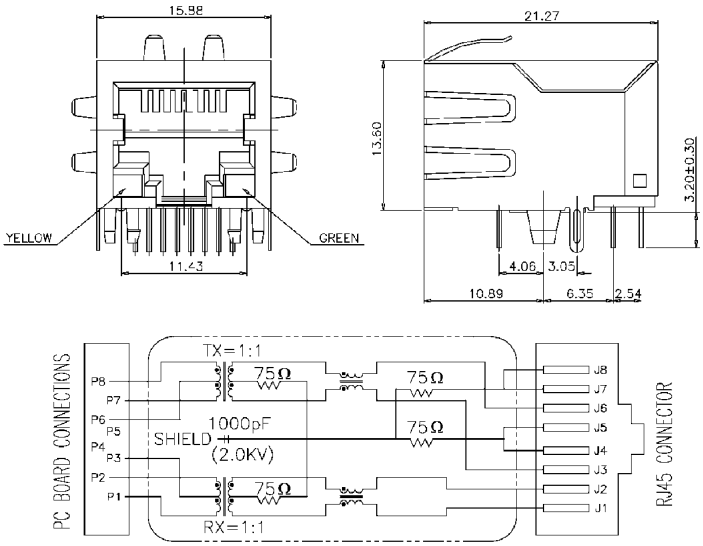

TS3070S-8814-M

8P8C RJ45 MULTIPORT JACK WITH MAGNETIC, SHIELDED

MATERIALS AND FINISH

Shield: Brass, Nickel plating
Jack Body: High Temp. Thermoplastic, black, UL94V-0
Contact: Phosphor Bronze
Contact area - Gold plating over Nickel
Solder area - Tin plating over Nickel

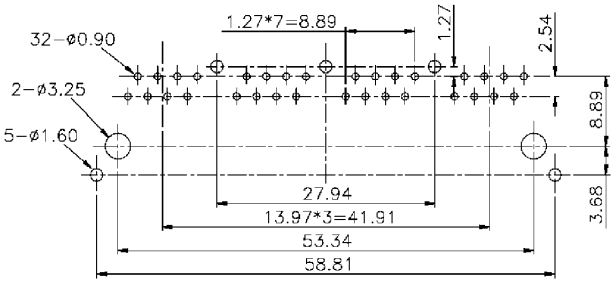

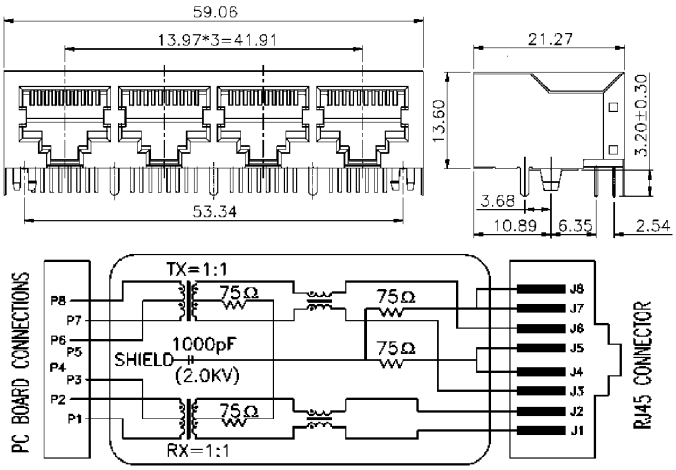

TS3004ST-8*1 SMT
TS3004ST-10101 SMT

MATERIALS AND FINISH

Standard material: Glass filled Nylon66 (UL94V-0)
Standard color: Black
Contact: Thickness 0.35mm Alloy C5191,
6µ"Gold plating over Nickel (mating area)
Tin plating over Nickel (solder area)

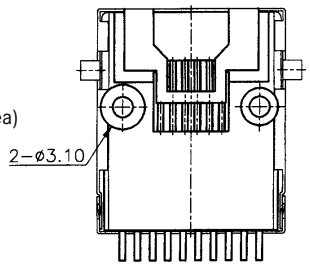

PCB-Layout (Top View)

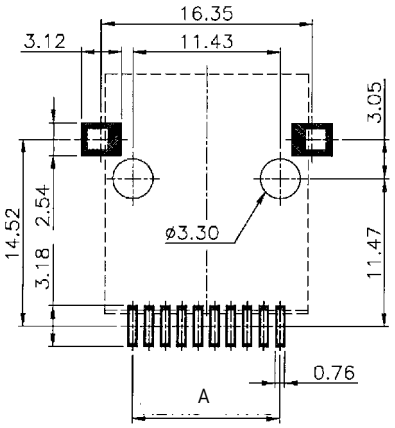

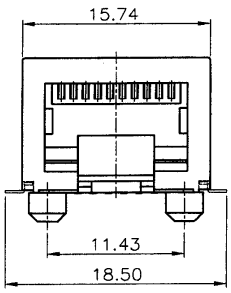

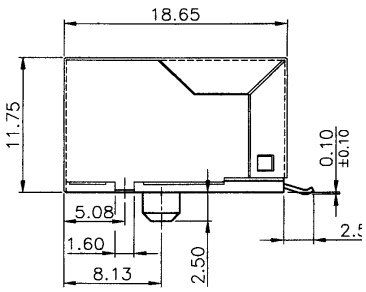

* Depopulation of contacts possible

Part Number	No. of Positions	A
TS3004ST-8*1SMT	8	8.89
TS3004ST-10101SMT	10	11.43

TS3004S-**1SMT

MATERIALS AND FINISH

Shielding: Copper Alloy (0.2mm, Tin Plated)
Housing: PA6T C430NK (UL 94V-0), colour black
Contact: Thickness 0.35mm Alloy C5210,
6µ"Gold plating over Nickel (mating area)
Tin plating over Nickel (solder area)

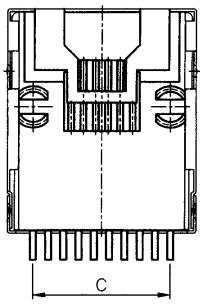

PCB-Layout (Top View)

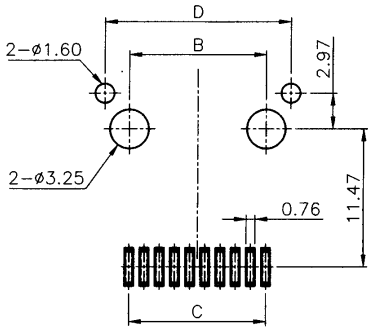

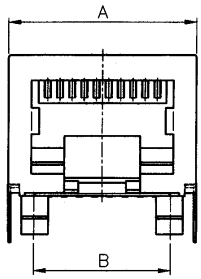

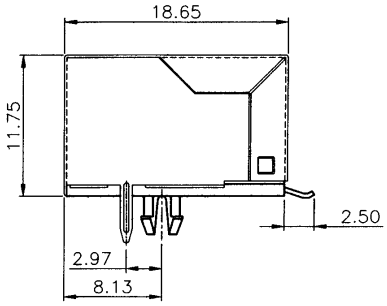

* Depopulation of contacts possible

Part Number	No. of Positions	A	B	C	D
TS3004S-6*1SMT	6	13.56	10.16	6.53	13.57
TS3004S-8*1SMT	8	15.74	11.43	8.89	15.54
TS3004S-10*1SMT	10	15.74	11.43	11.43	15.54

PART NUMBER TS3009S-881

MATERIALS AND FINISH

Shielding: Brass, Nickel plated
Housing: Engineering Thermoplatsic (UL94V-0)
Contact: Gold plating over Nickel (mating area)
Tin plating over Nickel (solder area)

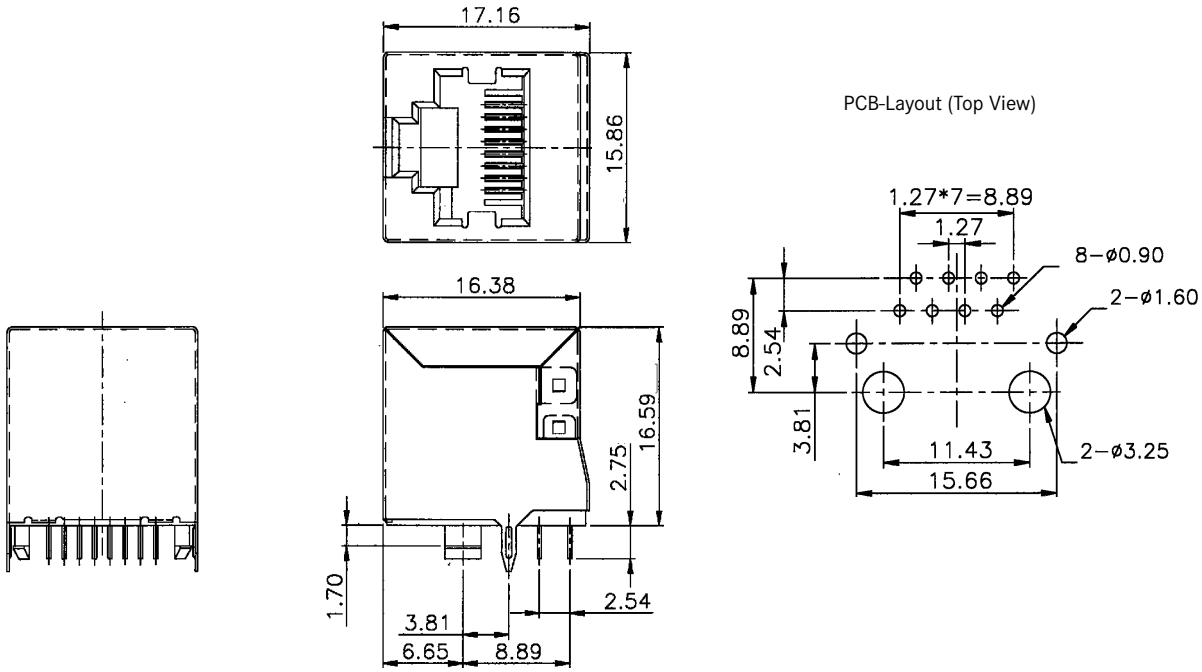

PART NUMBER TS3014S-**-1

MATERIALS AND FINISH

Shielding: Brass, Nickel plating
Housing: Thermoplastic, glass filled (UL 94V-0), colour black
Contact: Phosphor Bronze,
6µ"Gold plating over Nickel (mating area)
Tin plating over Nickel (solder area)

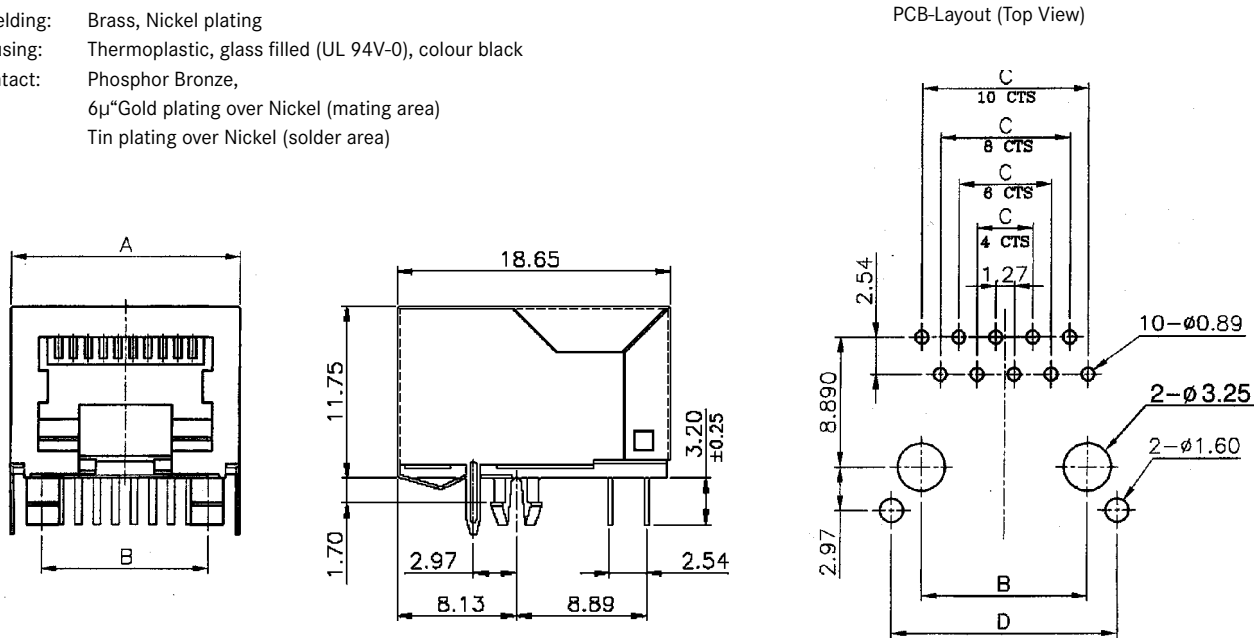

* Depopulation of contacts possible

Part Number	No. of Positions	A	B	C	D
TS3014S-6*-1	6	13.56	10.16	6.53	13.57
TS3014S-8*-1	8	15.74	11.43	8.89	15.54
TS3014S-10*-1	10	15.74	11.43	11.43	15.54

PART NUMBER TS3017S1-**21

MATERIALS AND FINISH

Shielding: Copper alloy, Nickel plated
Housing: Polyester, glass filled (UL 94V-0), colour black
Contact: Thickness 0.35mm Alloy C5210,
6µ"Gold plating over Nickel (mating area)
Tin plating over Nickel (solder area)

Standard Type PCB-Layout (Top View)

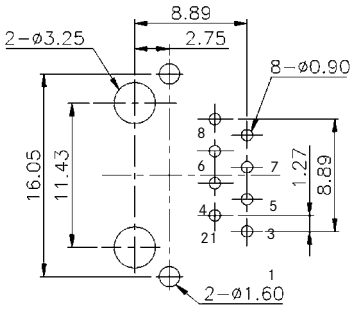

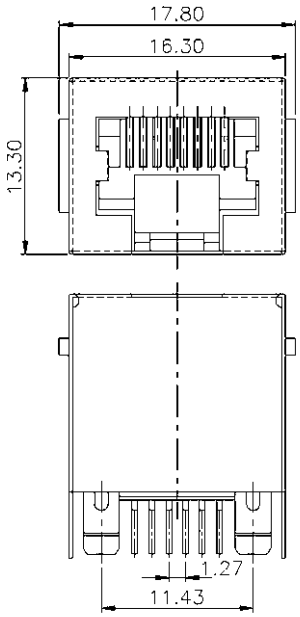

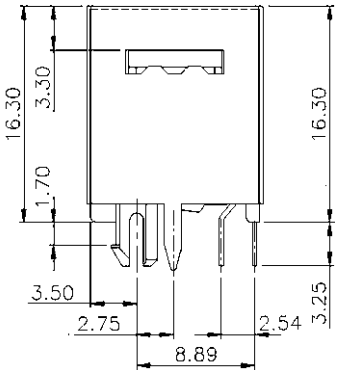

CAT5 Type PCB-Layout (Top View)

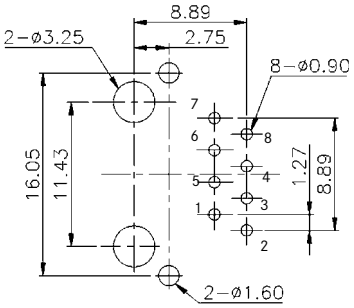

PART NUMBER TS3101S-**1

MATERIALS AND FINISH

Shielding: Copper alloy, Nickel plated
Housing: Polyester, glass filled (UL 94V-0), colour black
Contact: Thickness 0.35mm Alloy C5210,
6µ"Gold plating over Nickel (mating area)
Tin plating over Nickel (solder area)

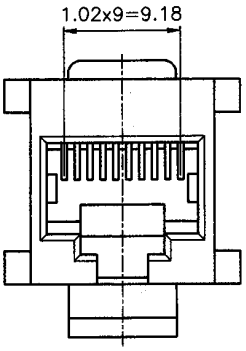

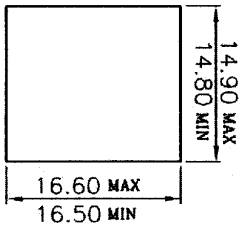

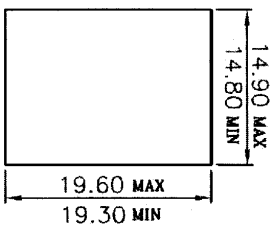

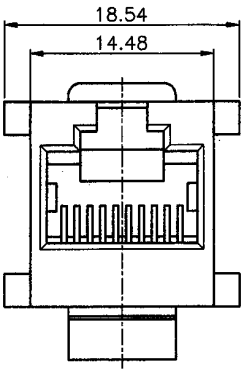

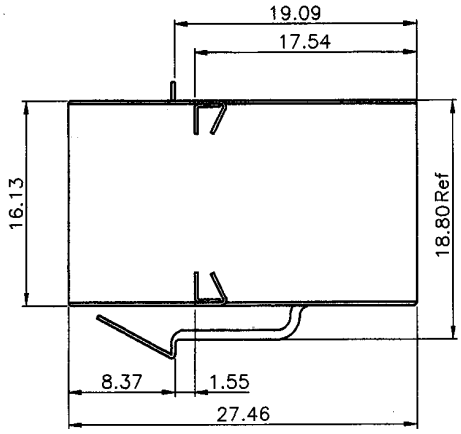

Single Panel - Latch clearance
Panel thickness 0.0062 inch

SPECIFICATIONS

Insulation Resistance:	500MΩ min. at 100V DC
Withstanding Voltage:	1,000Vrms min. 60Hz
Contact Resistance:	30mΩ max. at 10mA / 20mV max.
Operating Temp. Range:	–30°C to +70°C
Mating Cycles:	1,000 insertions

MATERIALS AND FINISH

Insulator:	PA9T (UL94V-0)
Contacts:	Phosphsor Bronze
Contact Plating:	Gold over Nickel
Solder Plating:	Tin over Nickel

FEATURES

- 2x1 and 2x4, 8 pins with 8 contacts, PCB edge-mount
- Tape and Reel packaging (60 pcs./ tray)

PART NUMBER

EDS04RJ45 - *X* - 8X8 - T9S

- Series No.
- 2x1 = Two Jacks in One Row
  2x4 = Two Jacks in Four Rows
- Contacts: 8 Pin / 8 Contacts
- Design No.

OUTLINE DIMENSIONS

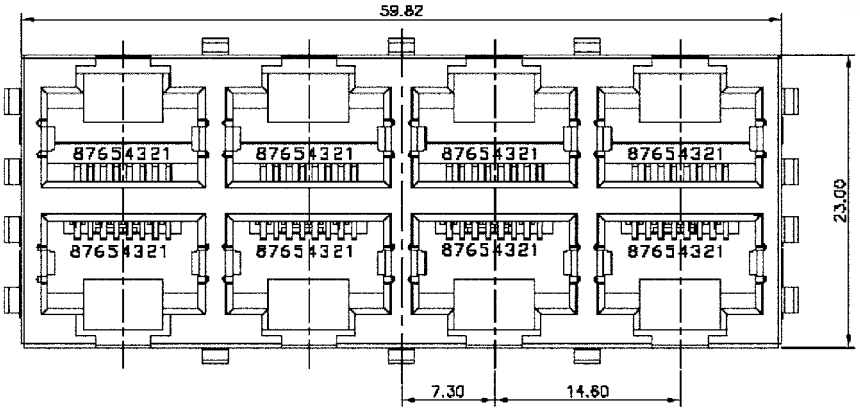

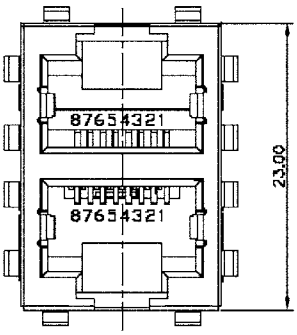

View A

View A

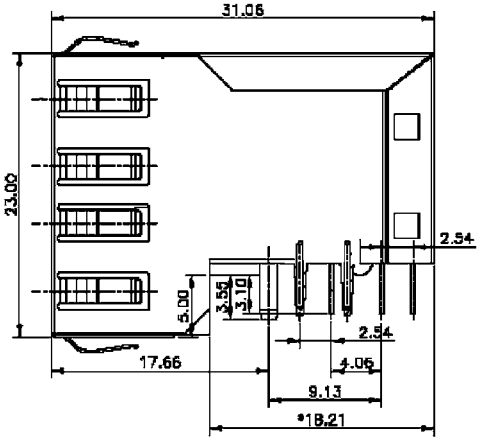

Top View

RECOMMENDED PCB LAYOUT

EDS04RJ45-2x4-2x8-T9S

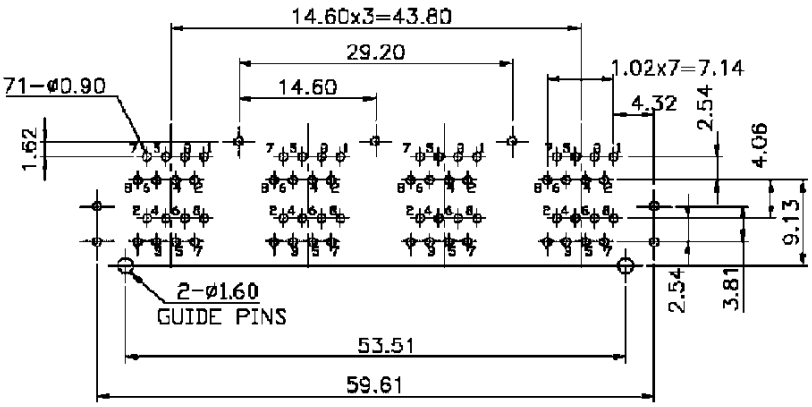

EDS04RJ45-2x1-2x8-T9S

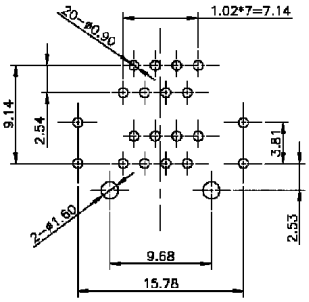

Trading Division

CABLES AND ASSEMBLIES

INTRODUCTION, YAMAICHI AND CABLE ASSEMBLY 297

FLAT CABLES 298
SERIES FLEX, TFC30, DK, TP-FLEX, FS-FLEX

FLAT / ROUND CABLES 305
SERIES SFX-S2, SFX-S

ROUND AND MULTI TWISTED PAIRS 307
SERIES 7/0.1, 7/0.127, UL20276

WE'LL MAKE CABLE ASSEMBLIES SIMPLE FOR YOU!

Our experience over the years covers development and distribution of standard as well as customised connectors, also in the Test Contactor industry. Yamaichi engagement in the area of cable assemblies from small to high volumes has now been clearly strengthened with our "All-in-One Service" concept. We offer not only standardised assemblies but also specific designs, customised harnesses and complex systems

STEP 1. CONCEPT

Which connector system, which cable, which kind of housing, etc...Many questions and lots of hidden details come along with cable assemblies. With our long time experience we want to support you with your needs.

STEP 2. DESIGN

Design concepts, feasability studies, FMEA´s, 3D drafts. Can be provided by our development departments in Munich and Tunesia for a quick turnaround.

STEP 3. MATERIAL SOURCING

We have built up a tight supplier network over many years. So customers benefit from synergies at work enabling positive prices and delivery times.

STEP 4. PRODUCTION

Experienced and ambitioned operators in a half automated production line together with a wide machine park enables us to react flexible and fast to your demands.

STEP 5. TEST / QUALITY

Our test equipment can compare to certification companies. We are able to simulate even the toughest industrial environments and we can “look inside” without destruction. Together with 100% test we ensure constant quality.

For further information and to discuss your individual demands please contact Yamaichi

SPECIFICATIONS

Conductor Resistance:	358Ω/km max.
Insulation Resistance:	1MΩ min. (km)
Dielectric Strength:	2,000V AC / minute
Flame Resistance:	VW-1

MATERIALS AND FINISH

Insulation: PVC
Conductor: 30 AWG (7/0.1mm) stranded Cu-wire

FEATURES

- 25MIL (0.635mm) pitch flat cable designed for termination with high density (1.27mm) IDC connectors
- Available in two versions, similar to the 50 MIL flat cable
  - B type is bonded throughout for standard applications
  - S type is bonded/unbonded at regular intervals resulting in greater flexibility if required
- UL Style No. 20028
- Halogen Free

PART NUMBER

FLEX - *2 ** - 7/0.1

Cable Series

Colour Arrangement:
B2 = Grey colour with a red edge for polarity and continuous bonding throughout
S2 = Grey colour with a red edge including regular 30mm bonded and 70mm unbonded sections

Number of Conductors

STANDARD CABLE LENGTH

61 meters per reel

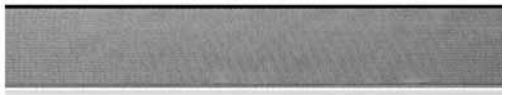

CABLE DIMENSIONS

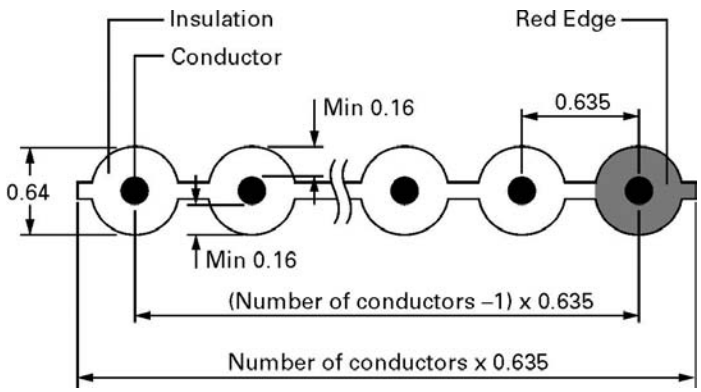

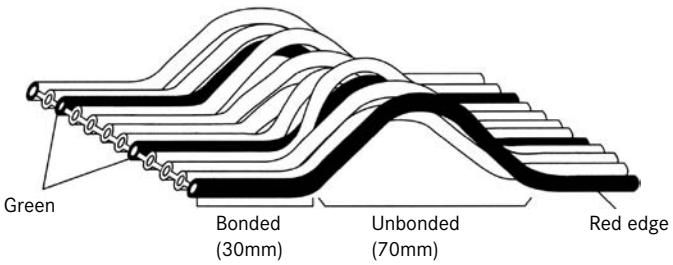

Part Number	No. of Conductors	Notes
FLEX-B2 10-7/0.1	10	no S2-type
FLEX-B2 16-7/0.1	16	no S2-type
FLEX-B2 20-7/0.1	20	
FLEX-*2 26-7/0.1	26	
FLEX-B2 30-7/0.1	30	
FLEX-B2 34-7/0.1	34	
FLEX-*2 40-7/0.1	40	
FLEX-*2 50-7/0.1	50	
FLEX-B2 60-7/0.1	60	
FLEX-B2 64-7/0.1	64	no S2-type
FLEX-*2 68-7/0.1	68	
FLEX-B2 80-7/0.1	80	
FLEX-B2 100-7/0.1	100	

SERIES TFC30 33MIL (0.847MM), HITACHI CABLE (150V, 105°C)

SPECIFICATIONS

Insulation Resistance:	5MΩ / km min. at 20°C
Withstanding Voltage:	1,500V AC / min.
Voltage Rating:	150V max.
Conductor Resistance:	362Ω / km max. at 20°C
Operating Temp. Range:	-20°C to +105°C

PART NUMBER

TFC30 - 96 (0.847) *

- Series No.
- No. of Conductors: 96
- Packing Sizes:
  Unmarked = In Rolls (61 meters)
  M = 1 meter

STANDARD CABLE LENGTH

see Part Number details

MATERIALS AND FINISH

Insulation:	PVC
Conductor:	30 AWG (7/0.1mm) stranded Cu-wire

FEATURES

- 33MIL, 0.847mm pitch flat cable designed for termination with DIN41612 IDC connectors (96 pos.)
- UL Style No. 2678

CABLE DIMENSIONS

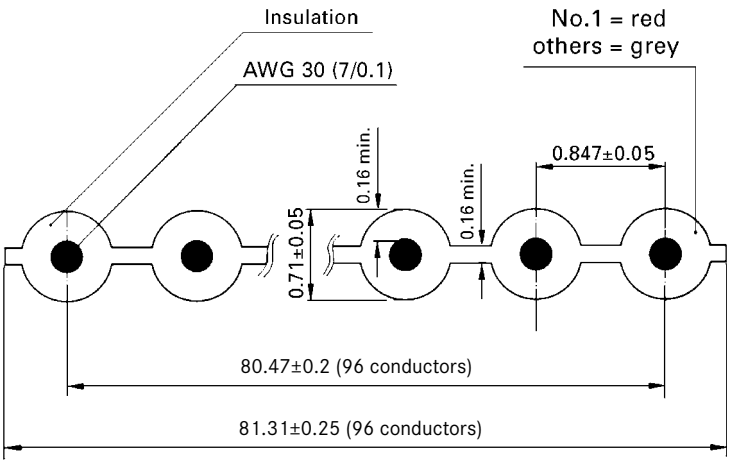

SPECIFICATIONS

Conductor Resistance:	237Ω/km max.
Insulation Resistance:	100MΩ min. (km)
Voltage Rating:	300V
Temperature range:	-20°C to +105°C
Dielectric Strength:	2,000V AC / minute
Flame Resistance:	VW-1

MATERIALS AND FINISH

Insulation:	PVC, grey
Conductor:	28 AWG (7/0.127mm) stranded copper wire

FEATURES

- 1.0mm pitch flat cable designed for termination with a high density 2.0mm IDC connector
- UL Style No. 2651, CSA

PART NUMBER

DK 10 - 1.0 *

- DK: Cable Series
- 10: Number of Conductors: 10 to 68
- 1.0: Pitch: 1.0mm
- *: Unmarked = 30.5 meters per Reel; M = 1 meter (on request)

STANDARD CABLE LENGTH

see Part Number details

CABLE DIMENSIONS

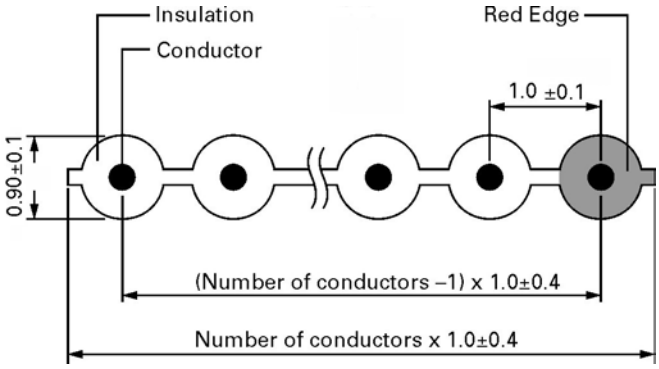

Part Number	No. of Conductors
DK10-1.0*	10
DK12-1.0*	12
DK14-1.0*	14
DK15-1.0*	15
DK16-1.0*	16
DK20-1.0*	20
DK25-1.0*	25
DK26-1.0*	26
DK34-1.0*	34
DK40-1.0*	40
DK44-1.0*	44
DK50-1.0*	50
DK60-1.0*	60
DK64-1.0*	64
DK68-1.0*	68

SPECIFICATIONS

Conductor Resistance:	216Ω/km max.
Insulation Resistance:	100MΩ min. (km)
Current Raring:	2A max.
Voltage Rating:	300V
Temperature Range:	-30°C to +105°C
Dielectric Strength:	2,000 V AC / minute
Flame Resistance:	VW-1

PART NUMBER

DK ** - *

- Cable Series
- Number of Conductors: 2 to 64
- Unmarked = 100 meters per Reel
  M = 1 meter (on request)

MATERIALS AND FINISH

Insulation:	PVC, colour grey with a red edge
Conductor:	28 AWG (7/0.127mm) stranded copper wire

STANDARD CABLE LENGTH

see Part Number details

FEATURES

- 1.27mm pitch flat cable with 28AWG (7/0.127mm) conductors
- Ribbed on both sides enabling IDC termination on either side of the cable
- UL Style No. 2651, CSA, VDE 0811

CABLE DIMENSIONS

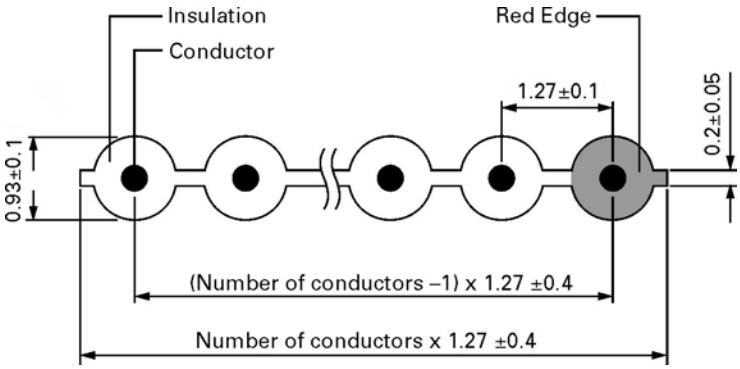

SPECIFICATIONS

Conductor Resistance:	222Ω/km max.
Insulation Resistance:	10MΩ min. (km)
Dielectric Strength:	1,500V AC / minute
Flame Resistance:	VW-1

MATERIALS AND FINISH

Insulation:	PVC
Conductor:	28 AWG (7/0.127mm) stranded copper wire

FEATURES

- Identical to 50 MIL (1.27 mm) OKIFLEX-B type except that it is intermittently bonded or unbonded at precise intervals
- Greater cable flexibility is achieved within the unbonded section
- UL Style No. 2651

PART NUMBER

FLEX - S* ** - 7/0.127 *030

Cable Series

Colour Arrangement:
S4 = 10 colours repeated brown, red, orange, yellow, green, blue, violet, grey, white, black
S = Grey colour with a red edge for polarity and coloured green every fifth conductor

*Number of Conductors from 10 to 64

Interval Style:
3030 = 30mm Unbonded / 30mm Bonded
7030 = 70mm Unbonded / 30mm Bonded

*minimum order quatity may be required

STANDARD CABLE LENGTH

61 meters per reel

Colour Arrangement S

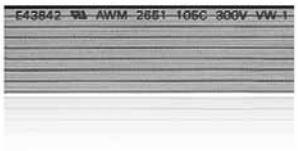

Colour Arrangement S4

CABLE DIMENSIONS

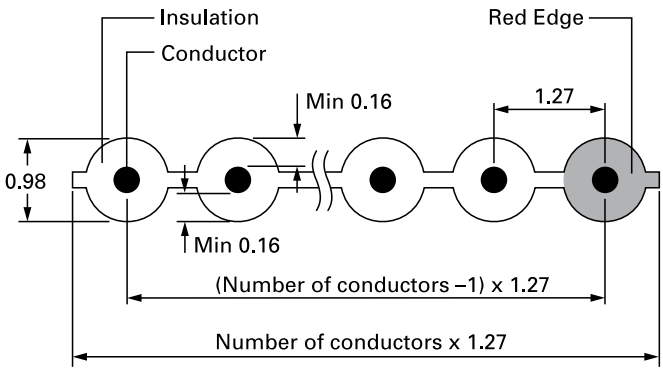

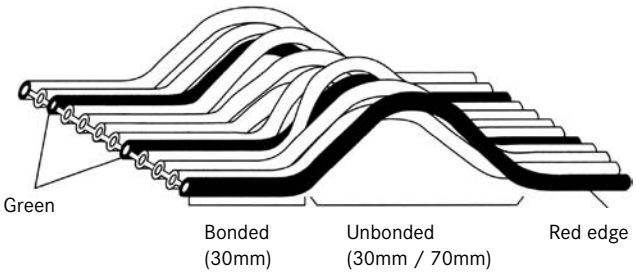

Trading Division

SPECIFICATIONS

Conductor Resistance: 222Ω/km max.
Insulation Resistance: 10MΩ min. (km)
Dielectric Strength: 1,500V AC / minute
Flame Resistance: VW-1

MATERIALS AND FINISH

Insulation: PVC
Conductor: 28 AWG (7/0.127mm) stranded copper wire

FEATURES

- Twisted pairs designed to prevent crosstalk
- Twisted pairs are unbonded resulting in greater flexibility
- Regular flat sections for IDC termination
- UL Style No. 20591

PART NUMBER

TPFLEX - N* **P - 7/0.127 - 250

Cable Series

Colour Arrangement:
N = Grey colour with a red edge for polarity and coloured green every fifth conductor
N4 = 10 colours repeated brown, red, orange, yellow, green, blue, violet, grey, white, black

Number of Pairs:
(1 Pair = 2 Conductors)

Interval Style:
250 = 50mm Bonded and Flat 200mm Unbonded & Twisted

STANDARD CABLE LENGTH

30.5 meters per reel

CABLE DIMENSIONS

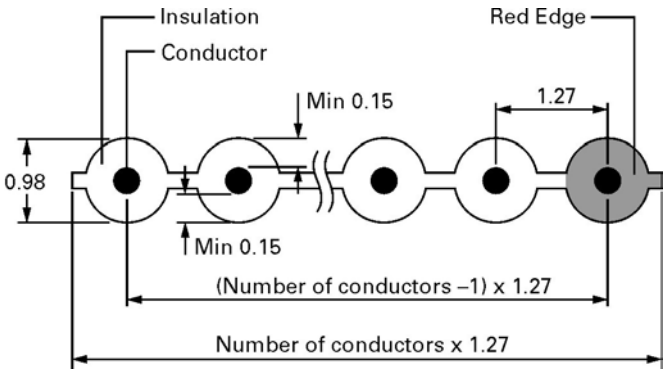

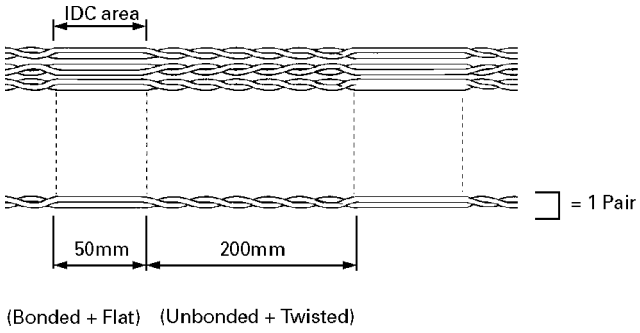

Part Number	No. of Conductors
TPFLEX-N 5P-7/0.127-250	10
TPFLEX-N* 8P-7/0.127-250	16
TPFLEX-N*10P-7/0.127-250	20
TPFLEX-N*13P-7/0.127-250	26
TPFLEX-N15P-7/0.127-250	30
TPFLEX-N17P-7/0.127-250	34
TPFLEX-N20P-7/0.127-250	40
TPFLEX-N25P-7/0.127-250	50
TPFLEX-N30P-7/0.127-250	60
TPFLEX-N32P-7/0.127-250	64

SPECIFICATIONS

Conductor Resistance:	222Ω/km max.
Insulation Resistance:	5MΩ min. (km)
Dielectric Strength:	1,500V AC / minute
Flame Resistance:	VW-1

MATERIALS AND FINISH

Insulation:	PVC
Conductor:	28 AWG (7/0.127mm) stranded copper wire
Shielding:	Aluminium foil together with a 28 AWG drain wire
Jacket:	PVC colour black

FEATURES

- Flat 50MIL (1.27mm) Cable, jacketed and shielded
- Thin PVC jacket designed for external equipment applications
- Aluminium shielding on each side which minimizes RFI / EMI
- UL Style No. 2912

PART NUMBER

FS-FLEX - B ** - 7/0.127 ALV

- Cable Series
- Number of Conductors
- Aluminium Shield

STANDARD CABLE LENGTH

61 meters per coil

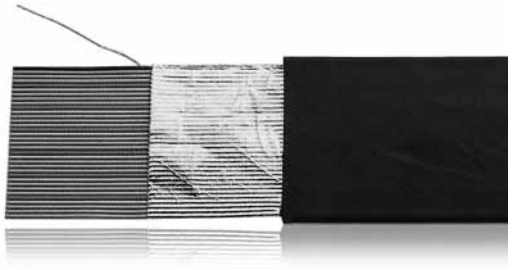

CABLE DIMENSIONS

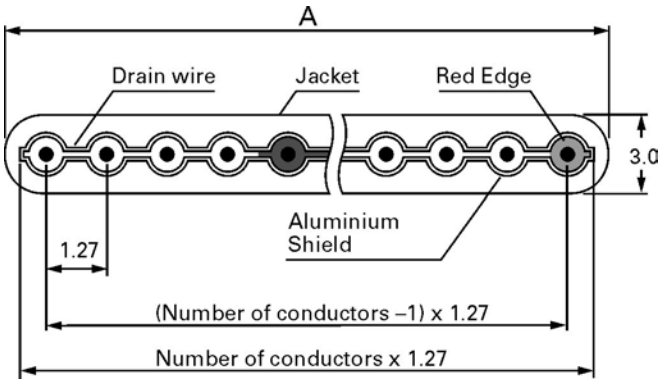

Part Number	No. of Conductors	A
FS-FLEX-B 8-7/0.127 ALV	8	13.6
FS-FLEX-B 10-7/0.127 ALV	10	16.0
FS-FLEX-B 14-7/0.127 ALV	14	21.2
FS-FLEX-B 16-7/0.127 ALV	16	22.6
FS-FLEX-B 20-7/0.127 ALV	20	28.7
FS-FLEX-B 25-7/0.127 ALV	25	35.1
FS-FLEX-B 26-7/0.127 ALV	26	36.3
FS-FLEX-B 26-7/0.127 ALV	26	36.3
FS-FLEX-B 30-7/0.127 ALV	30	40.1
FS-FLEX-B 34-7/0.127 ALV	34	46.5
FS-FLEX-B 36-7/0.127 ALV	36	49.0
FS-FLEX-B 40-7/0.127 ALV	40	54.0
FS-FLEX-B 50-7/0.127 ALV	50	66.8
FS-FLEX-B 60-7/0.127 ALV	60	79.5
FS-FLEX-B 64-7/0.127 ALV	64	84.6

SPECIFICATIONS

Conductor Resistance:	358Ω/km max.
Insulation Resistance:	5MΩ min. (km)
Dielectric Strength:	1,500V AC / minute
Flame Resistance:	VW-1

MATERIALS AND FINISH

Insulation:	PVC
Conductor:	30 AWG (7/0.1mm) stranded copper wire
Shielding:	Braided copper together with a 28 AWG drain wire
Jacket:	PVC, colour warm grey

FEATURES

- High Density/Half Pitch 25MIL (0.635mm) flat cable formed in an 'S' shape within a PVC jacket for external wiring
- Designed to accept High Density IDC connectors
- Bonded at 30mm, unbonded at 70mm
- Shielded versions for RFI / EMI noise reduction
- UL Style No. 20266

PART NUMBER

SFX - S2 ** - 7/0.1 3030 - SV

- Cable Series
- Number of Conductors
- Shield Requirements:
  SV = With Shield (Standard)

STANDARD CABLE LENGTH

61 meters per coil

CABLE DIMENSIONS

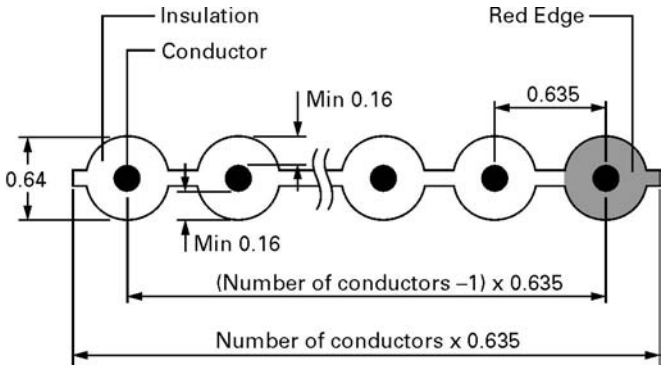

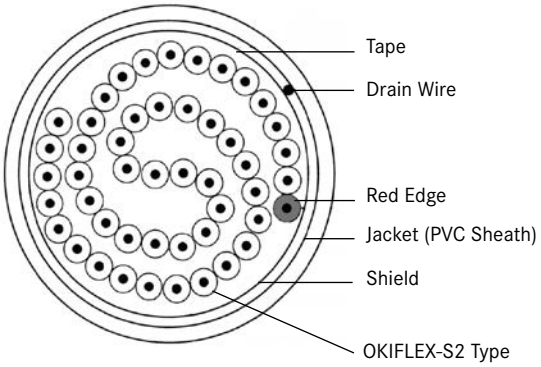

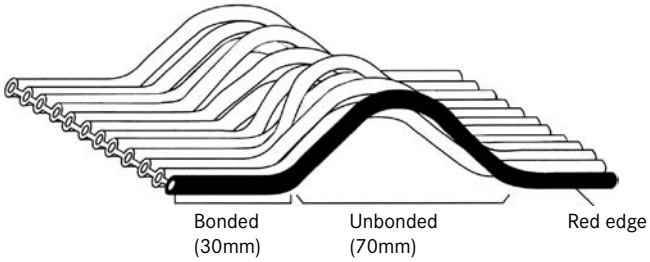

[1] For the following versions please contact Yamaichi, a minimum order quantity may be required

Part Number	No. of Conductors	PVC Sheath Outer Dia.
SFX-S2 20-7/0.1 3030-SV	20	6.3
SFX-S2 26-7/0.1 3030-SV	26	7.0
[1]SFX-S2 34-7/0.1 3030-SV	34	7.3
SFX-S2 40-7/0.1 3030-SV	40	7.6
SFX-S2 50-7/0.1 3030-SV	50	8.1
[1]SFX-S2 60-7/0.1 3030-SV	60	9.6
SFX-S2 64-7/0.1 3030-SV	64	10.1
[1]SFX-S2 80-7/0.1 3030-SV	80	10.6
SFX-S2 100-7/0.1 3030-SV	100	11.0

SPECIFICATIONS (WITH SHIELD)

Conductor Resistance:	222Ω/km max.
Insulation Resistance:	5MΩ min. (km)
Dielectric Strength:	1,500V AC / minute
Flame Resistance:	VW-1

PART NUMBER

SFX - S ** - 7/0.127 3030 - SV

- Cable Series
- No. of Conductors (Grey wire with red edge and green every fifth contact)
- Shield Requirements: SV = with Shield

Standard Cable Length
100 meters per coil

MATERIALS AND FINISH

Insulation:	PVC
Conductor:	28 AWG (7/0.127mm) stranded copper wire
Shielding:	Braided copper together with a 28 AWG drain wire
Jacket:	PVC, colour warm grey

FEATURES

- Flat 50MIL (1.27mm) Cable formed in an 'S' shape within a round PVC jacket for external wiring
- Bonded/unbonded at 30mm regular intervals
- UL Style No. 20266

CABLE DIMENSIONS

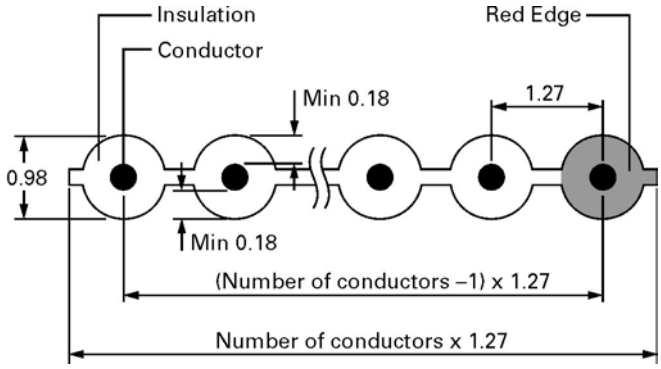

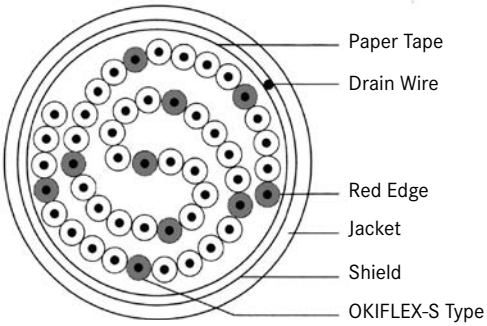

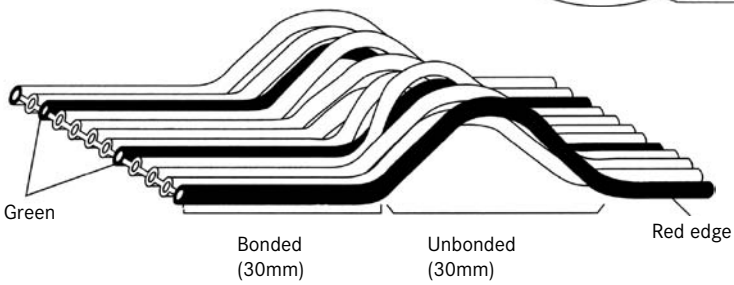

Following versions available on request, minimum order quantity may be required

Part Number	No. of Conductors	PVC Sheath Outer Dia.
SFX-S 10-7/0.127 3030-SV	10	6.6
SFX-S 14-7/0.127 3030-SV	14	7.4
SFX-S 16-7/0.127 3030-SV	16	8.4
SFX-S 20-7/0.127 3030-SV	20	8.5
SFX-S 26-7/0.127 3030-SV	26	9.6
SFX-S 30-7/0.127 3030-SV	30	10.4
SFX-S 34-7/0.127 3030-SV	34	10.9
SFX-S 36-7/0.127 3030-SV	36	11.4
SFX-S 40-7/0.127 3030-SV	40	11.8
SFX-S 50-7/0.127 3030-SV	50	13.3
SFX-S 60-7/0.127 3030-SV	60	13.3
SFX-S 64-7/0.127 3030-SV	64	13.6

SERIES 7/0.1 AWG 30 (7/0.1MM) MULTI PAIR CABLE (30V, 80°C)

SPECIFICATIONS (WITH SHIELD)

Conductor Resistance:	362W/km max.
Insulation Resistance:	1MΩ min. (km)
Dielectric Strength:	350 V AC / min.
Flame Resistance:	VW-1

PART NUMBER

7/0.1 **P HRV16 - *

- 7/0.1: Cable Series
- **P: Number of Pairs (1 Pair = 2 Conductors)
- *: Shield Requirements: V= Without Shield, SV= With Shield

STANDARD CABLE LENGTH

100 meters per coil

MATERIALS AND FINISH

Insulation:	PVC
Conductor:	30 AWG (7/0.1mm) stranded copper wire
Shielding:	Aluminium foil and a 28 AWG drain wire
Jacket:	PVC, colour warm grey

FEATURES

- High Density Multi twisted-pair cable with 30AWG conductors in a round jacket
- Twisted pair effective against Crosstalk
- Single and double shield available for RFI / EMI reduction
- UL Style No. 20276

CABLE DIMENSIONS

Single Shield

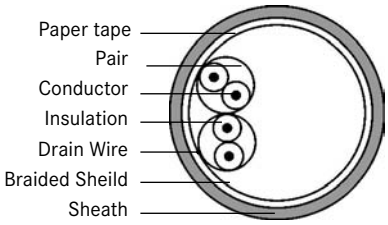

Without Shield

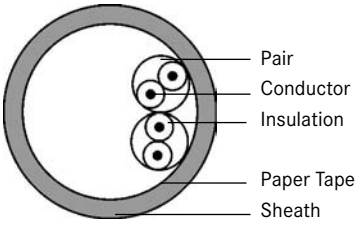

20 Pairs

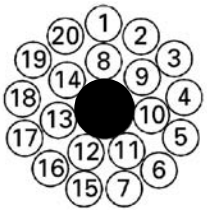

32 Pairs

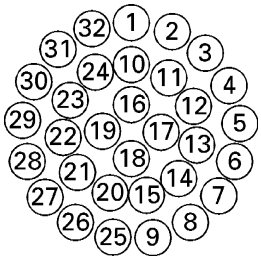

Part Number	No. of Conductors	PVC Sheath Outer Dia.	PVC Insulation Outer Dia.
7/0.1 5P HRV16-SV	10	5.4	0.62
7/0.1 8P HRV16-SV	16	6.2	0.62
7/0.1 10P HRV16-SV	20	6.2	0.62
7/0.1 13P HRV16-SV	26	6.9	0.62
7/0.1 17P HRV16-SV	34	7.4	0.62
7/0.1 20P HRV16-SV	40	7.8	0.62
7/0.1 25P HRV16-*	50	8.3	0.62
7/0.1 30P HRV16-SV	60	8.8	0.62
7/0.1 34P HRV16-*	68	9.3	0.62
7/0.1 40P HRV16-SV	80	10.2	0.62
7/0.1 50P HRV16-SV	100	10.6	0.62

SPECIFICATIONS (WITH SHIELD)

Conductor Resistance:	222Ω/km max.
Insulation Resistance:	1MΩ min. (km)
Dielectric Strength:	500V AC / minute
Capacitance:	138pF/m approx. (at 1KHz)
Impedance:	50Ω approx.
Propagation Delay:	4.8ns/m approx.
Near-End Crosstalk:	3.8% approx.
Flame Resistance:	VW-1

PART NUMBER

7/0.127 40P VX10 - *

Cable Series

Number of Pairs
(1 Pair = 2 Conductors)

Shield Requirements:
SV = With Cu -Shield
ALSV = With Double Shield
(Aluminium Foil and Braided Copper)

MATERIALS AND FINISH

Insulation:	Irradiated PVC
Conductor:	28 AWG (7/0.127mm) stranded copper wire
Shielding:	Aluminium foil and/or Braided copper and a 28 AWG drain wire
Jacket:	PVC, colour warm grey

STANDARD CABLE LENGTH

100 meters per coil

FEATURES

- High Density Multi twisted-pair cable with 28AWG conductors in a round PVC jacket
- Irradiated PC thin insulation enables 50MIL (1.27mm) flat ends to accept SCSI type High Density IDC connectors
- Braided shielding minimize RFI / EMI. Special double shielding available (= ALSV)
- UL Style No. 20276

CABLE DIMENSIONS

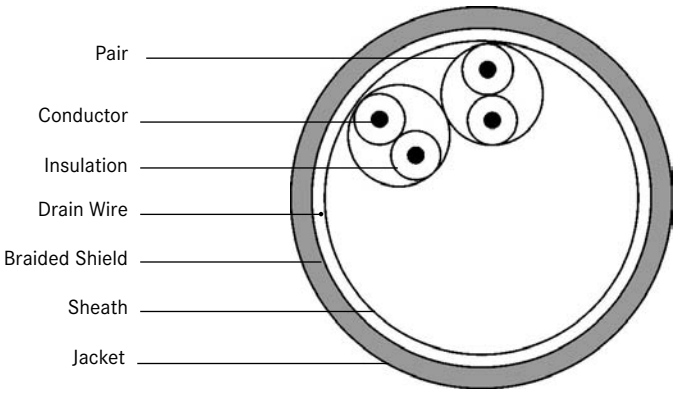

[1] For the following versions please contact Yamaichi, minimum order quantity may be required

Part Number	No. of Conductors	PVC Sheath Outer Dia.	PVC Insulation Outer Dia.
7/0.127 5P VX10-ALSV	10	5.2	0.58
[1] 7/0.127 5P VX10-SV	10	5.2	0.58
7/0.127 10P VX10-ALSV	20	6.1	0.58
[1] 7/0.127 10P VX10-SV	20	6.1	0.58
7/0.127 13P VX10-ALSV	26	6.5	0.58
[1] 7/0.127 13P VX10-SV	26	6.5	0.58
[1] 7/0.127 18P VX10-*	36	7.0	0.58
7/0.127 20P VX10-SV	40	7.0	0.58
[1] 7/0.127 20P VX10-ALSV	40	7.2	0.58
7/0.127 25P VX10-ALSV	50	8.0	0.58
[1] 7/0.127 25P VX10-SV	50	5.2	0.58
[1] 7/0.127 30P VX10-*	60	8.2	0.58
[1] 7/0.127 32P VX10-*	64	8.3	0.58
[1] 7/0.127 40P VX10-*	80	9.5	0.58
[1] 7/0.127 50P VX10-*	100	9.9	0.58

SPECIFICATIONS (WITH SHIELD)

Conductor Resistance:	246Ω/km max.
Insulation Resistance:	10MΩ min. (km)
Dielectric Strength:	300V AC / minute
Flame Resistance:	VW-1SC

PART NUMBER

UL20276-SB(MA) 25P X 28AWG

Cable Series

Number of Pairs (1 Pair = 2 Conductors)

MATERIALS AND FINISH

Insulation:	Irradiated PVC
Conductor:	28 AWG (7/0.127mm) stranded copper wire
Shielding:	Braided copper
Jacket:	PVC, sand beige

STANDARD CABLE LENGTH

- 200 meters per coil of conductors (pairs) 10P, 14P, 18P, 25P and 34P
- 100 meters per coil for conductors (pairs) 40P and 50P

FEATURES

- High Density Multi twisted-pair cable with 28AWG conductors in a round PVC jacket
- Irradiated PC thin insulation enables 50MIL (1.27mm) flat ends to accept SCSI type High Density IDC connectors
- Braided shielding minimize RFI / EMI
- UL Style No. 20276

CABLE DIMENSIONS

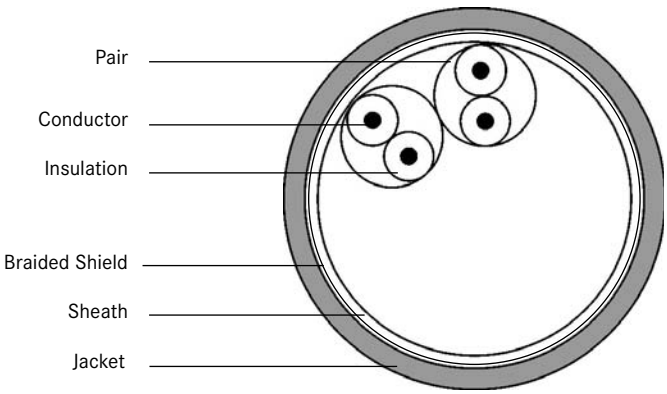

[1] For the following versions please contact Yamaichi, minimum order quantity may be required

Part Number	No. of Conductors	PVC Sheath Outer Dia.	PVC Insulation Outer Dia.
UL20276-SB(MA)14Px28AWG	28	6.5	0.58
UL20276-SB(MA)18Px28AWG	36	7.0	0.58
UL20276-SB(MA)25Px28AWG	50	7.9	0.58
UL20276-SB(MA)34Px28AWG	68	8.8	0.58
[1] UL20276-SB(MA)40Px28AWG	80	9.3	0.58
[1] UL20276-SB(MA)50Px28AWG	100	10.2	0.58

PRODUCTION SOCKETS

PACKAGES

SERIES IC149 AND ICP ADAPTER INTRODUCTION 313

AVAILABLE SOCKETS OVERVIEW

- QFP SOCKET CROSS REFERENCE
- SOCKET OUTLINE DIMENSIONS
- ADAPTER AND EXTENDER FOR EMULATION ADAPTER

SOCKETS AND ADAPTERS 318

SERIES IC149, AND ICP

PLCC - SMT 331

SERIES IC160

SOP - SMT 334

SERIES IC179

ARRAYS

SPGA - TH INTERSTIAL 336

SERIES YED210

PGA - TH SOLDER DIP 337

SERIES YED122

QFP-PRODUCTION USE SOCKET AND EMULATION-ADAPTER

YAMAICHI's IC149-Series is available in many different formats, from 44 pins to 240 pins. It is designed to fit most of the common semiconductors from various manufacturers.

The PC-Board-Layout for this SMT-Socket-Series virtually corresponds to that of the semiconductor. Since the space required for this Socket is the same as the semiconductoritself, there is no need to change the PC-Board-Layout after finishing the experimental stage.

Once the Socket is no longer required for trials or testing, it can be removed without the necessity to redesign the PC-Board-Layout.

The insertion and fixing of the IC can be easily achieved by bolting the engaging top frame. To secure the Socket before soldering, it is also available with positioning pins.

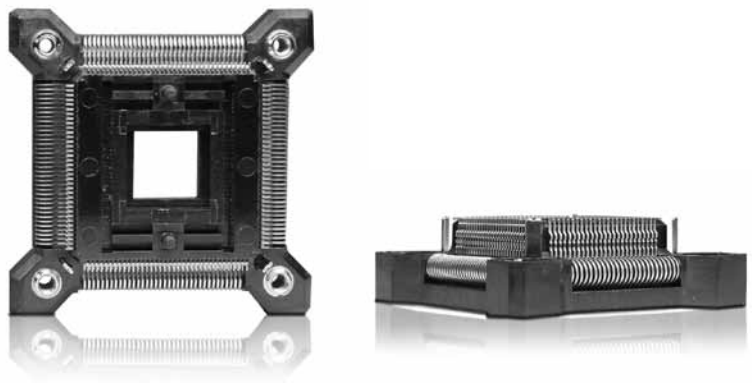

IC149 - Socket

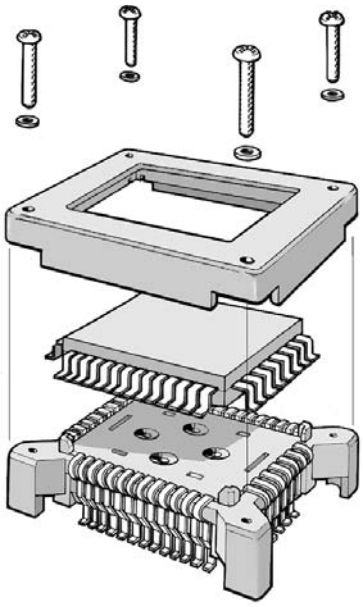

Another advantage of the IC149-Series is the YAMAICHI ICP-Emulation-Adapter, available for pin counts from 44 to 160 pins.

Instead of the IC, the Adapter is bolted to the Socket.
The Adapter has through hole pins, disentangled in a 3 or 4 row rough pitch for connection to a printed circuit board.

By using this Adapter a connection between Socket and Emulator or programming device can be easily achieved.

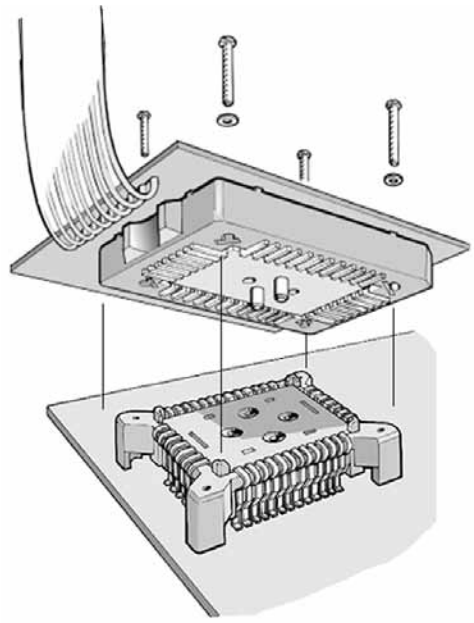

IC149 - Socket with Emulation-Adapter

SOCKET PART NUMBER	IC - PACKAGE	IC-BODY SIZE	IC-DIMENSIONS (TOTAL)	ADAPTER PART NO.	PAGE NO.
IC149-044-*52-B5	QFP44 0.8 pitch	10 x 10	12.20 x 12.20	ICP-044-5	318
IC149-044-*49-B5	QFP44 0.8 pitch	14 x 14	17.2 x 17.2	ICP-044-2	318
IIC149-064-*69-B5	QFP64 0.5 pitch	10 x 10	12.0 x 12.0	–	319
IC149-064-*75-B5	QFP64 0.5 pitch	10.4 x 10.4	12.0 x 12.0	ICP-064-6	319
IC149-064-*08-B5	QFP64 0.8 pitch	14 x 14	17.2 x 17.2	ICP-064-2	320
IC149-064-*01-B5	QFP64 1.0 pitch	14 x 20	17.6 ~20.1 x 23.6~26.1	–	320
IC149-080-*31-B5	QFP80 0.5 pitch	12 x 12	13.6 x 13.6	ICP-080-6	321
IC149-080-*30-B5	QFP80 0.5 pitch	12 x 12	14 x 14	ICP-080-6	321
IC149-080-*51-B5	QFP80 0.65 pitch	14 x 14	16 x 16	ICP-080-7	322
IC149-080-*17-B5	QFP80 0.65 pitch	14 x 14	17.2 x 17.2	ICP-080-4	322
IC149-080-*21-B5	QFP80 0.8 pitch	14 x 20	17.2 x 23.2	ICP-080-5	323
IC149-080-*12-B5	QFP80 0.8 pitch	14 x 20	18.8 x 24.8	ICP-080-3	323
IC149-100-*25-B5*[1)]	QFP100 0.5 pitch	14 x 14	16 x 16	ICP-100-5	324
IC149-100-*54-B5*[1)]	QFP100 0.5 pitch	14 x 14	16 x 16	ICP-100-5	324
IC149-100-028-B5	BQFP100 0.635 pitch	19.13 x 19.13	22.94 x 22.94	ICP-100-6	325
IC149-100-*14-B5	QFP100 0.65 pitch	14 x 20	17.2 x 23.2	ICP-100-4-4	325
IC149-112-*42-B5	QFP112 0.65 pitch	20 x 20	23.2 x 23.2	ICP-112-2	326
IC149-120-*43-B5	QFP120 0.4 pitch	14 x 14	16 x 16	ICP-120-2	326
IC149-128-*80-B5	QFP128 0.8 pitch	28 x 28	31.2 x 31.2	ICP-128-2	327
IC149-132-*15-B5	QFP132 0.635 pitch	22.36 x 22.36	27.43 x 27.43	–	327
IC149-144-*45-B5*[1)]	QFP144 0.5 pitch	20 x 20	22 x 22	ICP-144-1	328
IC149-160-050-B5	QFP160 0.5 pitch	24 x 24	26 x 26	–	328
IC149-160-*23-B5	QFP160 0.65 pitch	28 x 28	32 x 32	ICP-160-1	329
IC149-176-*66-B5	QFP176 0.5 pitch	24 x 24	26 x 26	–	329
IC149-208-*61-B5	QFP208 0.5 pitch	28 x 28	30.6 x 30.6	–	330
IC149-240-*67-B5	QFP240 0.5 pitch	32 x 32	34.6 x 34.6	–	330

Explanation: * in the ordering code to be replaced by 0 = without positioning pin or 1 = with positioning pin.

[1)] IC149-100-*25-B51 and IC149-100-*54-B51 are without SMT fixing metal

**Socket variations are for reference only. To ensure for a suitable socket when ordering it is advisable to first contact Yamaichi

IC - DESCRIPTION			SOCKET VARIATIONS AND ORDERING CODES**		
IC-PACKAGE	IC-BODY SIZE	IC-DIMENSIONS (TOTAL)	PRODUCTION-USE IC149	TEST & BURN-IN CLAMSHELL	TEST & BURN-IN OPEN TOP
QFP44 0.8 pitch	10 x 10	12.20 x 12.20	IC149-044-*52-B5	IC51-0444-825	–
QFP44 0.8 pitch	14 x 14	17.2 x 17.2	IC149-044-*49-B5	–	–
QFP64 0.5 pitch	10 x 10	12.0 x 12.0	IC149-064-069-B5	IC51-0644-807	IC201-0644-003
QFP64 0.5 pitch	10.4 x 10.4	12.0 x 12.0	IC149-064-075-B5	–	–
QFP64 0.8 pitch	14 x 14	17.2 x 17.2	IC149-064-*08-B5	IC51-0644-824-1	–
QFP64 1.0 pitch	14 x 20	17.6~20.1 x 23.6~26.1	IC149-064-*01-B5	IC51-0644-820-1	IC201-0644-019
QFP80 0.5 pitch	12 x 12	13.6 x 13.6	IC149-080-*31-B5	–	IC201-0804-020
QFP80 0.5 pitch	12 x 12	14 x 14	IC149-080-*30-B5	IC51-0804-808	IC201-0804-014
QFP80 0.65 pitch	14 x 14	16 x 16	IC149-080-*51-B5	IC51-0804-795	–
QFP80 0.65 pitch	14 x 14	17.2 x 17.2	IC149-080-*17-B5	IC51-0804-956-2	IC201-0804-012
QFP80 0.8 pitch	14 x 20	17.2 x 23.2	IC149-080-*21-B5	IC51-819 KS-12720	IC201-0804-032
QFP80 0.8 pitch	14 x 20	18.8 x 24.8	IC149-080-*12-B5	IC51-0804-819-1	IC201-0804-005
QFP100 0.5 pitch	14 x 14	16 x 16	IC149-100-*25-B5	IC51-1004-809	IC201-1004-008
BQFP100 0.635 pitch	19.13 x 19.13	22.94 x 22.94	IC149-100-028-B5	IC51-1004-827	–
QFP100 0.65 pitch	14 x 20	17.2 x 23.2	IC149-100-*14-B5	IC51-814 KS-12033	IC201-1004-028
QFP100 0.65 pitch	14 x 20	17.6~20.1 x 23.6~26.1	IC149-100-*54-B5	IC51-1004-809	IC201-1004-016
QFP112 0.65 pitch	20 x 20	23.2 x 23.2	IC149-112-*42-B5	IC51-1124-1036-2	–
QFP120 0.4 pitch	14 x 14	16 x 16	IC149-120-*43-B5	IC51-1204-1812	–
QFP128 0.5 pitch	14 x 20	16 x 22	IC149-128-*80-B5	IC51-1289-976-2	–
QFP132 0.635 pitch	22.36 x 22.36	27.43 x 27.43	IC149-132-*15-B5	–	
QFP144 0.5 pitch	20 x 20	22 x 22	IC149-144-*45-B5	IC51-1444-1354 / or -7	IC201-1444-026 / or -034
QFP160 0.5 pitch	24 x 24	32 x 32	IC149-160-050-B5	IC51-1604-1350	–
QFP160 0.65 pitch	28 x 28	26 x 26	IC149-160-*23-B5	IC51-1604-845-1	–
QFP176 0.5 pitch	24 x 24	32 x 32	IC149-176-*66-B5	IC51-1764-1505	IC234-1764-005
QFP208 0.5 pitch	28 x 28	30.6 x 30.6	IC149-208-*61-B5	IC51-2084-1052-x	IC217-2084-001
QFP240 0.5 pitch	32 x 32	34.6 x 34.6	IC149-240-*67-B5	IC51-2404-1655-2	IC217-2404-007

SPECIFICATIONS AND DRAWINGS ARE SUBJECT TO ALTERATION WITHOUT PRIOR NOTICE – DIMENSIONS IN MILLIMETER

SPECIFICATIONS

Contact Resistance:
30mΩ max. at 10mA and 20mV

Dielectric Withstanding Voltage:
$100V_{eff}$ to $700V_{eff}$ for 1 minute

Insulation Resistance:
500MΩ at 150V DC

Operating Temperature Range:
-25°C to +85°C

Temperature for Reflow-soldering:
220°C for 60 seconds (VPS)
220°C to 250°C for 60 seconds (IR)

Insulation Housing:
Polyphenylenesulfide (PPS) glass filled UL94V-0

Contacts:
Beryllium Copper (BeCu)

Plating Indication:
Mating Face = Au 0.3µm min. over 2.5 ~ 4.5µm Ni
Solder Face = Au 0.05µm min. over 2.5 ~ 4.5µm Ni

Mating Cycles:
20 insertions maximum

Maximum Allowable Torque:
- for 1-time screw connection: max 0.147 Nm
- for repetitive screw connection: min 0.078 Nm
  max 0.098 Nm

OUTLINE SOCKET DIMENSIONS

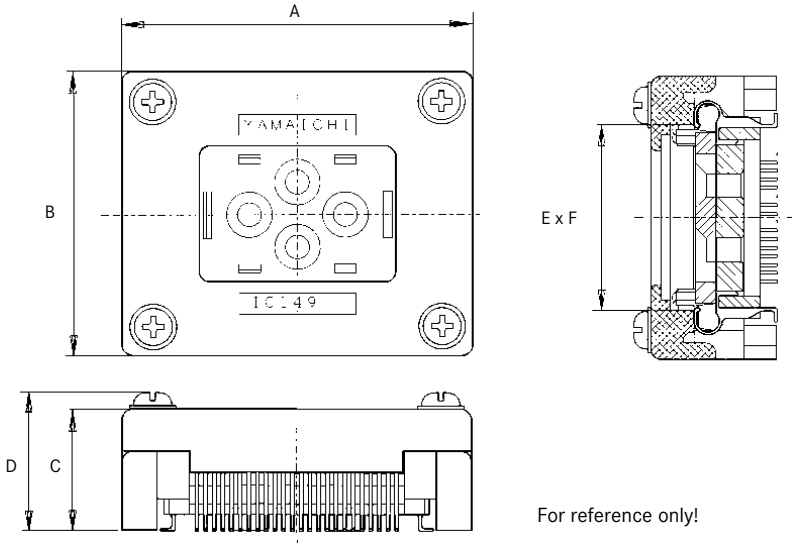

For reference only!

Remarks

1. Ensure a clean contact area. Fluxes, dust and other impurifications may cause corrosion and contact problems.
2. This Socket is not for automatic production. It is particulary suitable for the development of software stored in ROM and for testing LSI-IC's.
3. Careful attention must be taken when fixing the Socket, since it is entirely made from thermoplastic material. If the max. torque is exceeded, the Socket will be damaged beyond repair.
4. If using the Socket with an Adapter, please use the gold-plated Socket version.

SOCKET DIMENSIONS

Part Number	A	B	C	D	E x F
IC149-044-*52-B5	24.20	24.20	11.00	12.60	11.50 x 11.50
IC149-044-*49-B5	28.00	28.00	11.00	12.60	16.20 x 16.20
IC149-064-*69-B5	25.00	25.00	11.00	12.60	10.50 x 10.50
IC149-064-*75-B5	25.00	25.00	13,20	14.80	10.70 x 10.70
IC149-064-*01-B5	30.15	23.65	8.60	–	23.00 x 17.00
IC149-064-*08-B5	26.00	26.00	8.50	10.10	16.40 x 16.40
IC149-080-*12-B5	32.20	26.60	11.50	13.10	23.00 x 17.00
IC149-080-*17-B5	26.00	26.00	8.10	9.70	16.30 x 16.30
IC149-080-*21-B5	32.20	26.60	8.50	10.10	22.40 x 16.40
IC149-080-*30-B5	25.00	25.00	11.00	13.20	13.24 x 13.24
IC149-080-*31-B5	24.00	24.00	11.00	13.20	12.84 x 12.84
IC149-080-*51-B5	28.00	28.00	11.00	12.60	15.30 x 15.30
IC149-100-*05-B5	30.15	23.65	8.60	–	23.00 x 17.00
IC149-100-*14-B5	32.20	26.60	8.50	10.10	22.40 x 16.40
IC149-100-*25-B5*	26.00	26.00	11.00	13.20	15.24 x 15.24
IC149-100-028-B5	32.00	32.00	11.15	12.75	21.20 x 21.20
IC149-100-*54-B5*	27.00	27.00	13.20	15.40	15.30 x 15.30
IC149-112-*42-B5	32.00	32.00	11.15	12.75	22.40 x 22.40
IC149-120-*43-B5	28.00	28.00	13.20	14.60	15.30 x 15.30
IC149-128-*80-B5	43.90	43.90	12.30	12.60	30.20 x 30.20
IC149-132-*15-B5*	36.00	36.00	9.16	11.36	26.85 x 26.85
IC149-144-*45-B5	34.20	34.20	12.30	12.60	21.14 x 21.14
IC149-160-*23-B5	40.00	40.00	9.90	11.50	31.01 x 31.01
IC149-160-050-B5	39.00	39.00	12.30	12.60	25.30 x 25.30
IC149-176-*66-B5	39.00	39.00	12.30	12.60	25.30 x 25.30
IC149-208-*61-B5	43.60	43.60	12.30	12.60	29.90 x 29.90
IC149-240-*67-B5	47.70	47.70	12.30	12.60	34.00 x 34.00

SPECIFICATIONS

Contact Resistance:
30mΩ max. at 10mA and 20mV

Dielectric Withstanding Voltage:
700V AC for 1 minute

Insulation Resistance:
500MΩ at 150V DC

Operating Temperature Range:
-25°C to +85°C

Insulation Housing:
PES, glass filled UL94V-0

Contacts:
Phosphor Bronze

Plating:
Au 0.3µm min. over 2.5 ~ 4.5µm Ni

Mating Cycles:
100 times minimum

Maximum Allowable Torque:
- for 1-time screw connection: max 0.147 Nm
- for repetitive screw connection: min 0.078 Nm
  max 0.098 Nm

OUTLINE ADAPTER DIMENSIONS

For reference only!

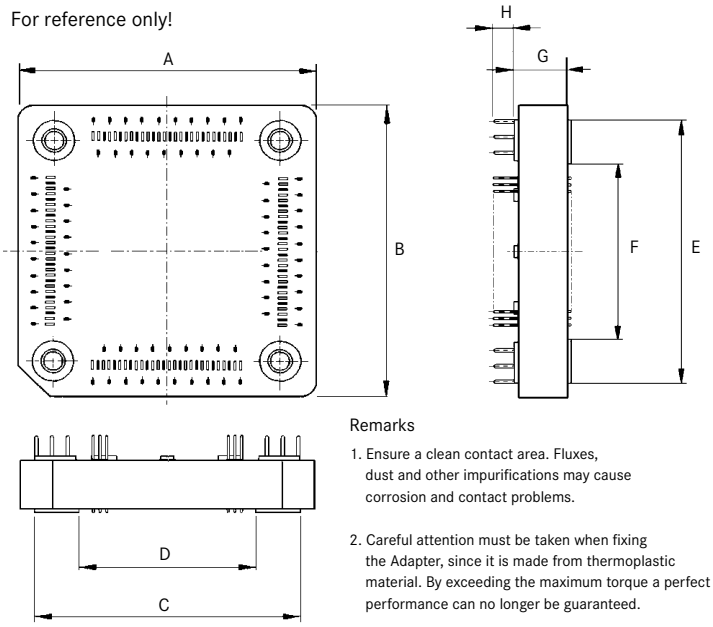

Remarks

1. Ensure a clean contact area. Fluxes, dust and other impurifications may cause corrosion and contact problems.
2. Careful attention must be taken when fixing the Adapter, since it is made from thermoplastic material. By exceeding the maximum torque a perfect performance can no longer be guaranteed.

ADAPTER DIMENSIONS

Part Number	A	B	C	D	E	F	G	H
ICP-044-2	29.90	29.90	25.00	15.00	25.00	15.00	8.08	2.4
ICP-044-5	25.10	25.10	22.20	12.20	22.20	12.20	8.08	2.4
ICP-064-2	28.00	28.00	25.53	15.00	25.53	5.90	6.20	2.4
ICP-064-6	25.00	25.00	–	–	–	–	8.08	2.4
ICP-080-3	36.62	30.62	32.42	21.90	26.42	15.00	6.20	2.4
ICP-080-4	29.32	29.32	25.53	15.00	25.53	15.90	6.20	2.4
ICP-080-5	36.62	30.62	32.42	21.90	26.42	–	6.20	2.4
ICP-080-6	27.00	27.00	14.50	–	14.50	–	8.08	2.4
ICP-080-7	28.00	28.00	16.50	–	16.50	15.90	8.08	2.4
ICP-100-4-1	36.62	30.62	32.41	21.90	26.42	15.90	5.50	3.0
ICP-100-4-4	36.62	30.62	32.41	21.90	26.42	–	5.50	3.0
ICP-100-5	29.00	29.00	16.50	–	16.50	21.28	8.08	2.4
ICP-100-6	34.50	34.50	31.81	21.28	31.81	21.00	5.50	3.1
ICP-112-2	35.00	35.00	31.53	21.00	31.53	–	6.20	2.4
ICP-120-2	28.00	28.00	16.50	–	16.50	–	8.08	2.4
ICP-128-2	43.90	43.90	–	–	–	–	8.08	2.4
ICP-144-1	35.00	35.00	22.50	–	22.50	29.88	8.08	2.4
ICP-160-1	44.20	44.20	40.41	29.88	40.41	–	5.50	3.1

EXTENDER FOR EMULATION-ADAPTER

For additional height we offer a separate extender, which can be stacked on top of the ICP-Emulation-Adapter

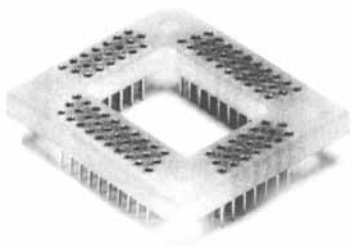

PART NUMBER: EXT 4.2-ICP-***-*

(extends the height of ICP by 4.2mm)

Contact Plating: Au over Ni

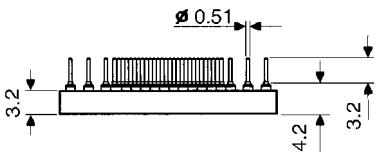

PART NUMBER: EXT 8.8-ICP-***-*

(extends the height of ICP by 8.8mm)

Contact Plating: Au over Ni

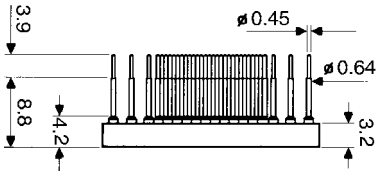

44 PINS - QFP/TQFP (11 X 11 PINS) 0.8 MM PITCH

IC - Dimensions

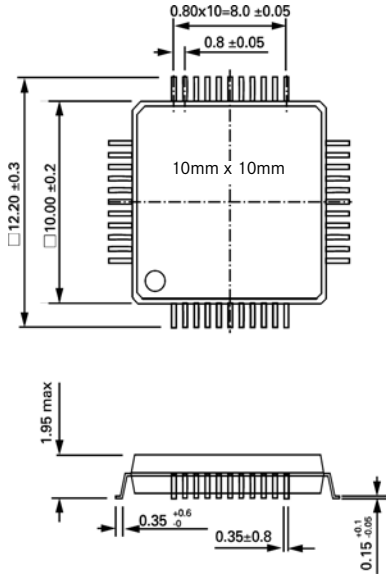

Socket PCB-Layout

Top View from Socket

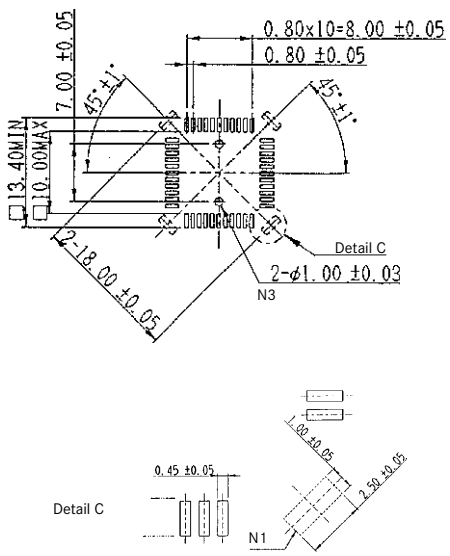

Adapter PCB-Layout

View from Soldering Side

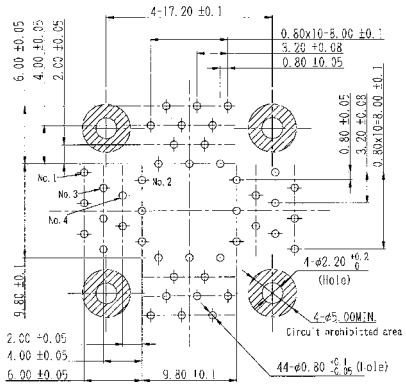

Part Number		Part Number for Emulation -Adapter
IC149-044-052-B5	(without positioning pins)	ICP-044-5
IC149-044-152-B5	(with positioning pins)	ICP-044-5

44 PINS - QFP/TQFP (11 X 11 PINS) 0.8 MM PITCH

IC - Dimensions

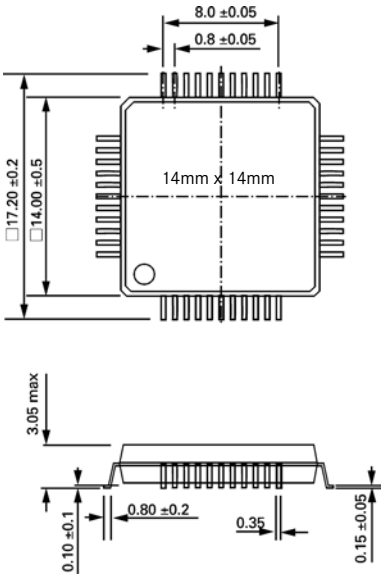

Socket PCB-Layout

Top View from Socket

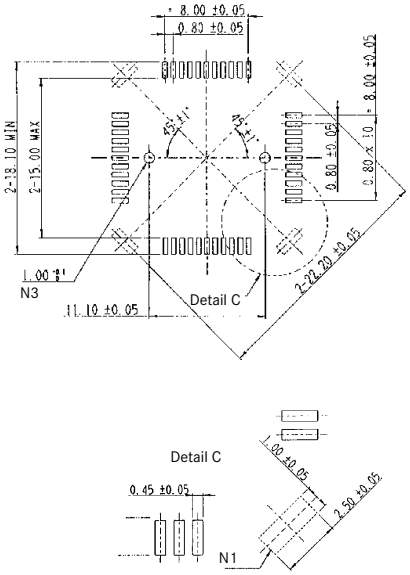

Adapter PCB-Layout

View from Soldering Side

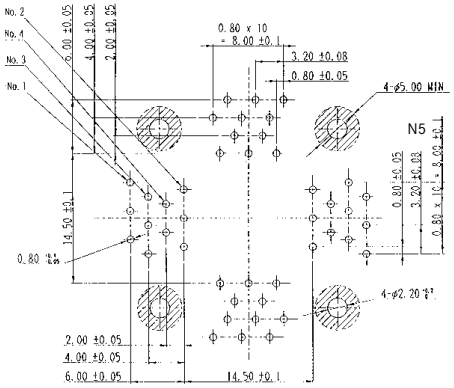

Part Number		Part Number for Emulation -Adapter
IC149-044-049-B5	(without positioning pins)	ICP-044-2
IC149-044-149-B5	(with positioning pins)	ICP-044-2

Notes:
N1: Metal soldering Tab Clip. Socket may be stabilized by soldering (Reflow) in these 4 areas.
N3: These holes are only necessary for use with positioning pins.
N5: No conduits within this hatched area.

64 PINS - QFP/TQFP (16 X 16 PINS) 0.5 MM PITCH

IC - Dimensions

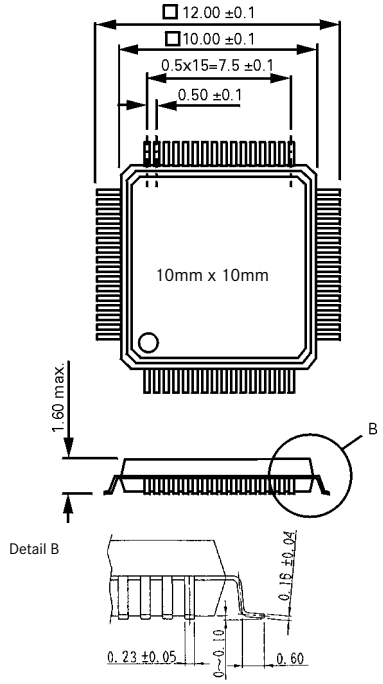

Socket PCB-Layout

Top View from Socket

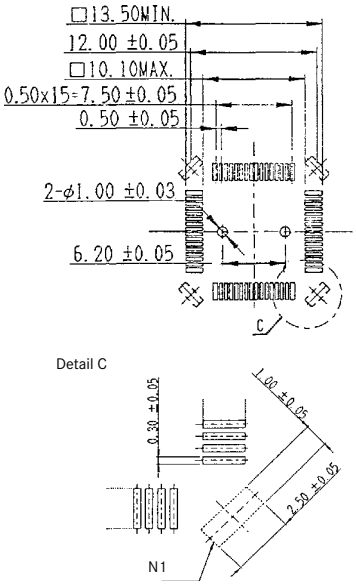

Adapter PCB-Layout

View from Soldering Side

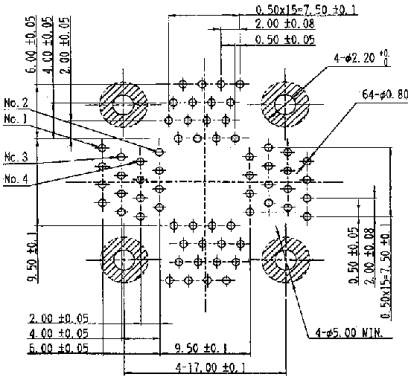

Part Number		Part Number for Emulation -Adapter
IC149-064-069-B5	(without positioning pins)	Not available for this socket
IC149-064-169-B5	(with positioning pins)	Not available for this socket

64 PINS - QFP/TQFP (16 X 16 PINS) 0.5 MM PITCH

IC - Dimensions

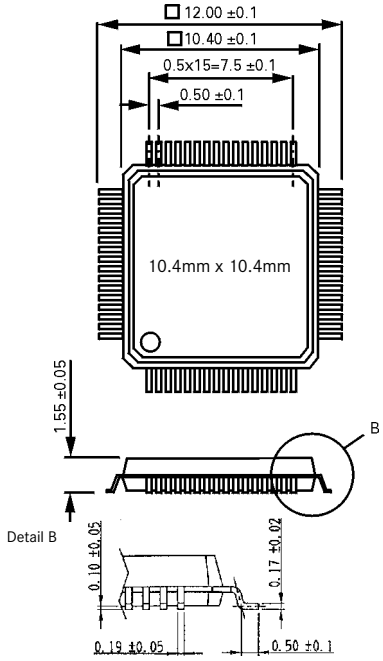

Socket PCB-Layout

Top View from Socket

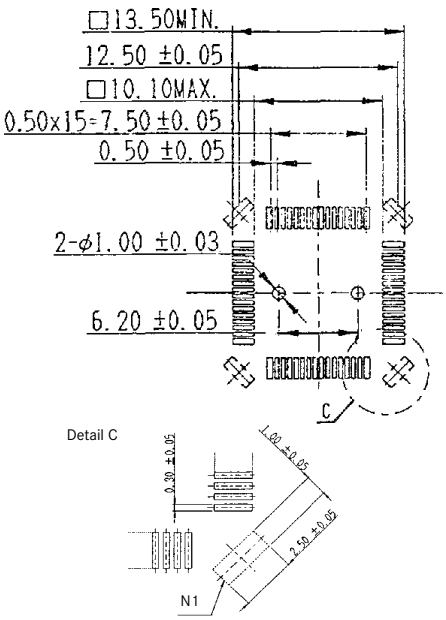

Adapter PCB-Layout

View from Soldering Side

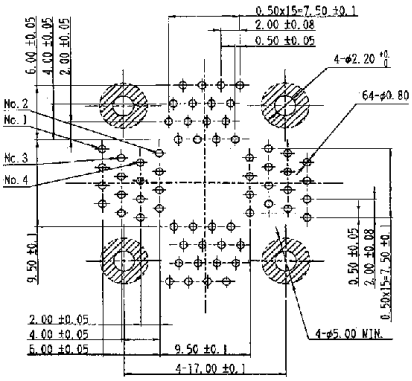

Part Number		Part Number for Emulation -Adapter
IC149-064-075-B5	(without positioning pins)	ICP-064-6
IC149-064-175-B5	(with positioning pins)	ICP-064-6

Notes:
N1: Metal soldering Tab Clip. Socket may be stabilized by soldering (Reflow) in these 4 areas.

64 PINS - QFP/TQFP (16 X 16 PINS) 0.8 MM PITCH

IC - Dimensions

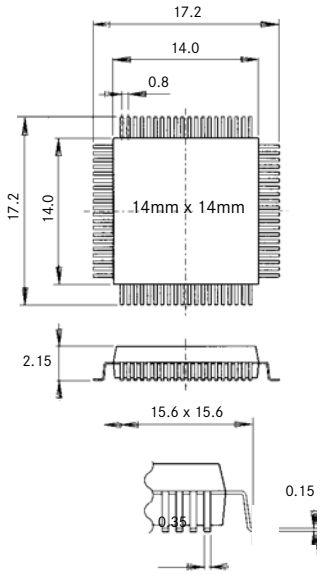

Socket PCB-Layout

Top View from Socket

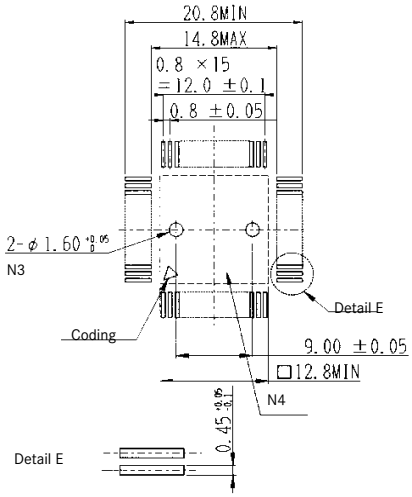

Adapter PCB-Layout

View from Soldering Side

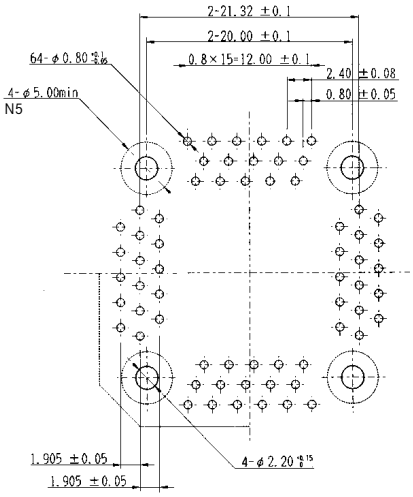

Part Number		Part Number for Emulation -Adapter
IC149-064-008-B5	(without positioning pins)	ICP-064-2
IC149-064-108-B5	(with positioning pins)	ICP-064-2

64 PINS - QFP/TQFP (13 X 19 PINS) 1.0 MM PITCH - CLIPPED COVER

IC - Dimensions

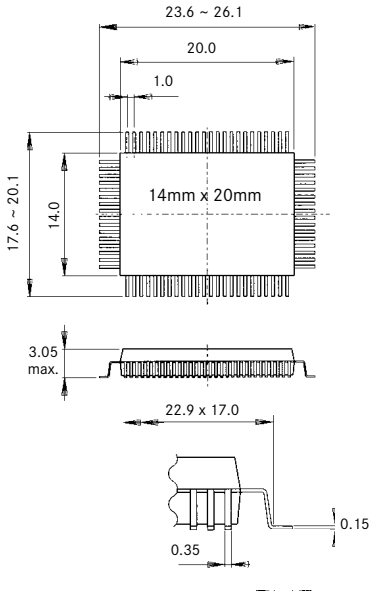

Socket PCB-Layout

Top View from Socket

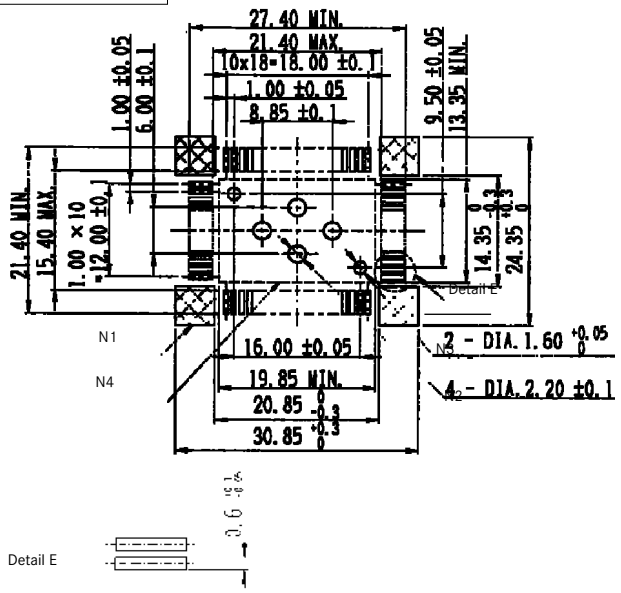

Part Number		Part Number for Emulation -Adapter
IC149-064-001-B5		Not available for this socket
IC149-064-101-B5	(with positioning pins)	Not available for this socket

Notes:
N1: Metal soldering Tab Clip. Socket may be stabilized by soldering (Reflow) in these 4 areas.
N3: These holes are only necessary for use with positioning pins.
N4: The Socket may be glued to the PC Board within this area.
N5: No conduits within this hatched area.

80 PINS - QFP/TQFP (20 X 20 PINS) 0.5 MM PITCH

IC - Dimensions

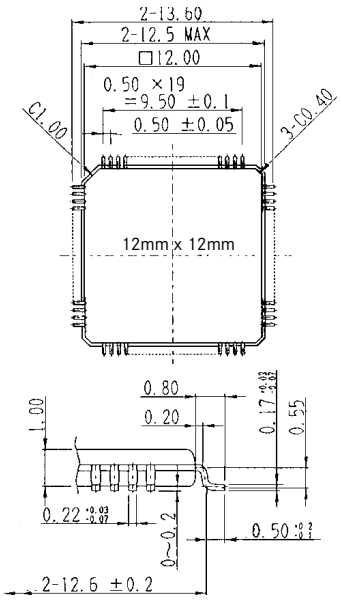

Socket PCB-Layout

Top View from Socket

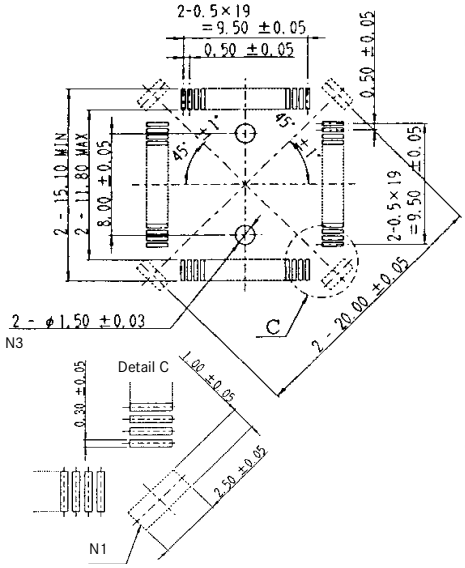

Adapter PCB-Layout

View from Soldering Side

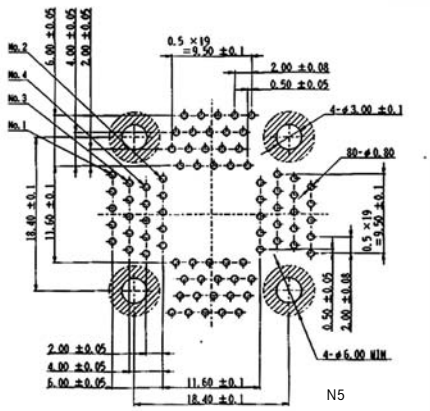

Part Number		Part Number for Emulation -Adapter
IC149-080-031-B5	(without positioning pins)	ICP-080-6
IC149-080-131-B5	(with positioning pins)	ICP-080-6

80 PINS - QFP/TQFP (20 X 20 PINS) 0.5 MM PITCH

IC - Dimensions

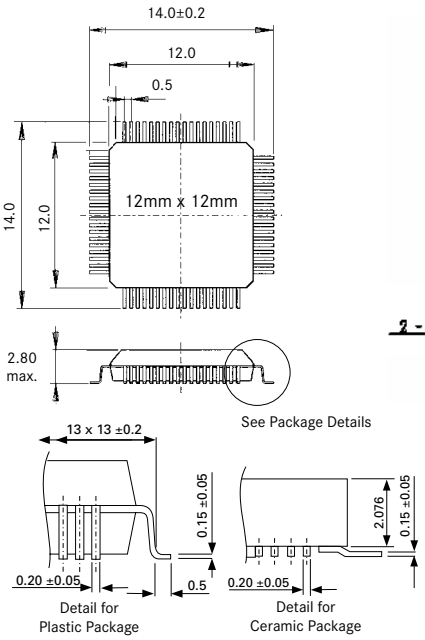

Socket PCB-Layout

Top View from Socket

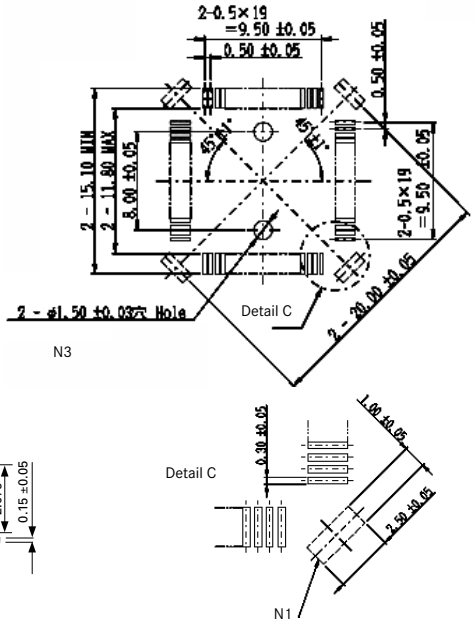

Adapter PCB-Layout

View from Soldering Side

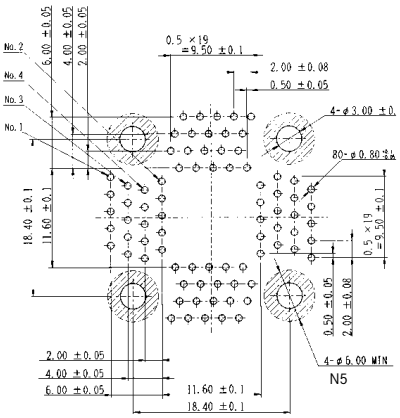

Part Number		Part Number for Emulation -Adapter
IC149-080-030-B5	(without positioning pins)	ICP-080-6
IC149-080-130-B5	(with positioning pins)	ICP-080-6

Notes:
N1: Metal soldering Tab Clip. Socket may be stabilized by soldering (Reflow) in these 4 areas.
N3: These holes are only necessary for use with positioning pins.
N4: The Socket may be glued to the PC Board within this area.
N5: No conduits within this hatched area.

80 PINS - QFP/TQFP (20 X 20 PINS) 0.65 MM PITCH

IC - Dimensions

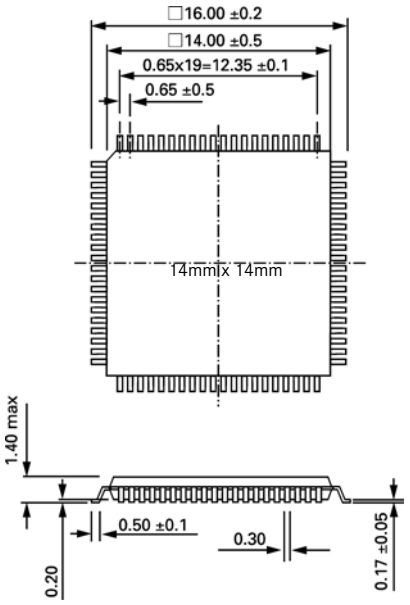

Socket PCB-Layout

Top View from Socket

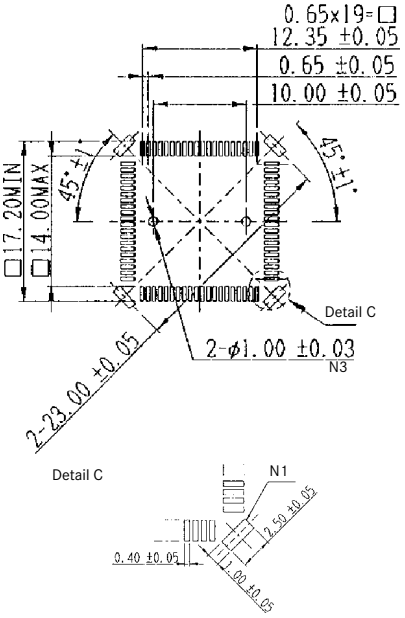

Adapter PCB-Layout

View from Soldering Side

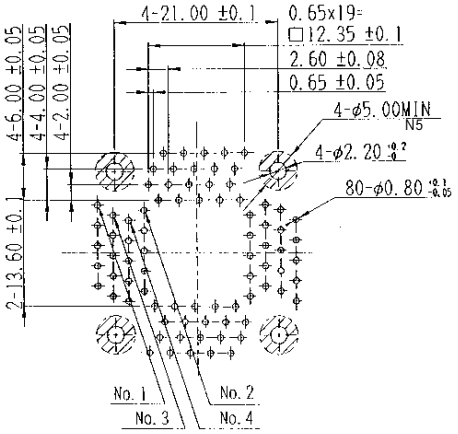

Part Number		Part Number for Emulation -Adapter
IC149-080-051-B5	(without positioning pins)	ICP-080-7
IC149-080-151-B5	(with positioning pins)	ICP-080-7

80 PINS - QFP/TQFP80 (20 X 20 PINS) 0.65 MM PITCH

IC - Dimensions

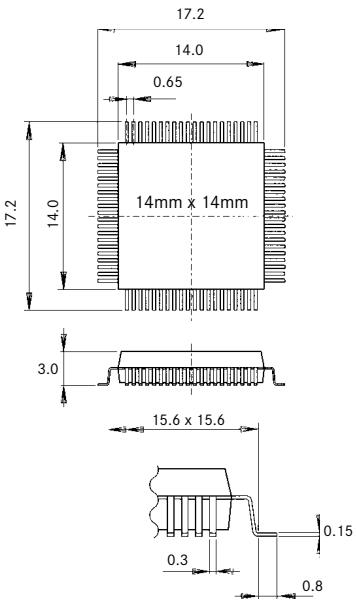

Socket PCB-Layout

Top View from Socket

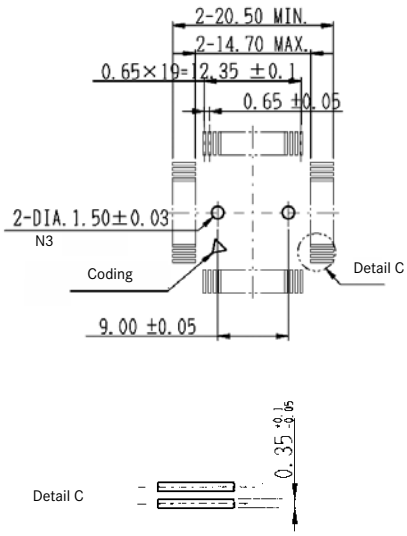

Adapter PCB-Layout

View from Soldering Side

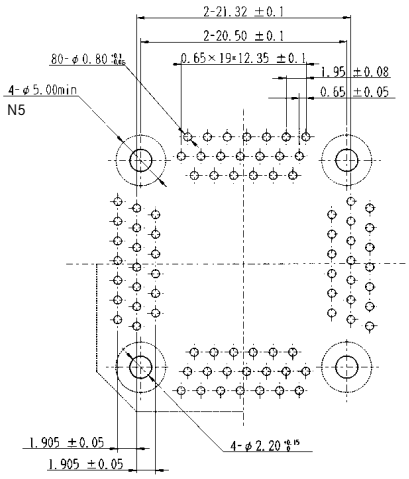

Part Number		Part Number for Emulation -Adapter
IC149-080-017-B5	(without positioning pins)	ICP-080-4
IC149-080-117-B5	(with positioning pins)	ICP-080-4

Notes:
N1: Metal soldering Tab Clip. Socket may be stabilized by soldering (Reflow) in these 4 areas.
N3: These holes are only necessary for use with positioning pins.
N5: No conduits within this hatched area.

80 PINS - QFP/TQFP80 (16 X 24 PINS) 0.8 MM PITCH

IC - Dimensions

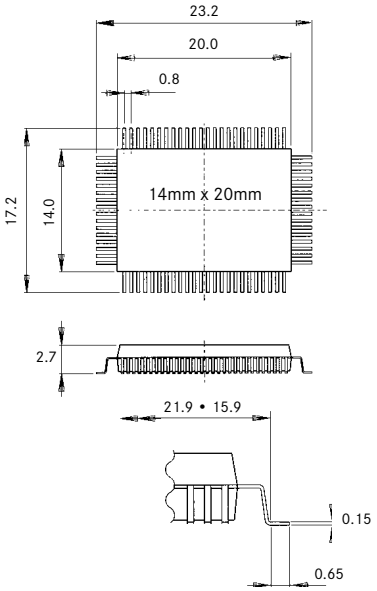

Socket PCB-Layout

Top View from Socket

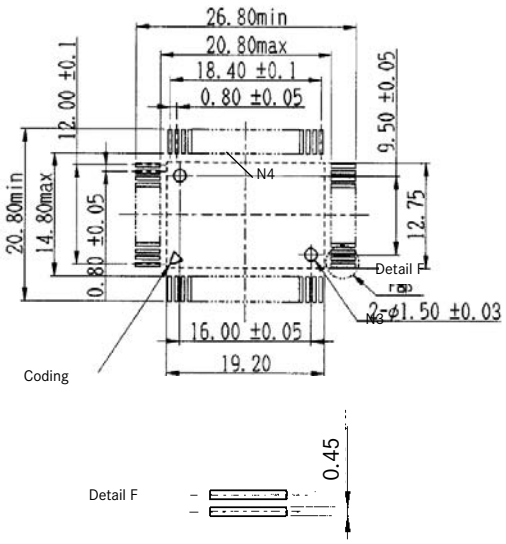

Adapter PCB-Layout

View from Soldering Side

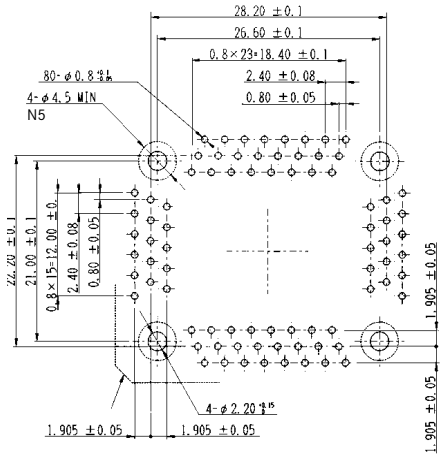

Part Number		Part Number for Emulation -Adapter
IC149-080-021-B5	(without positioning pins)	ICP-080-5
IC149-080-121-B5	(with positioning pins)	ICP-080-5

80 PINS - QFP/TQFP80 (16 X 24 PINS) 0.8 MM PITCH

IC - Dimensions

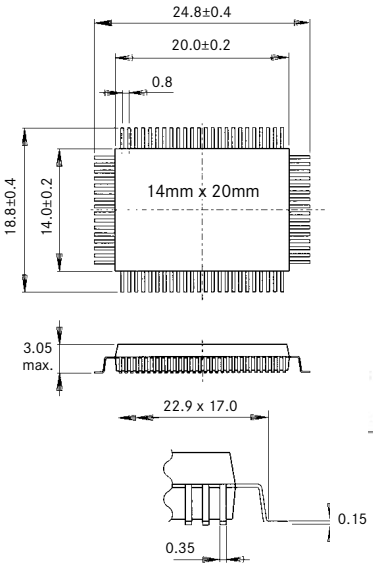

Socket PCB-Layout

Top View from Socket

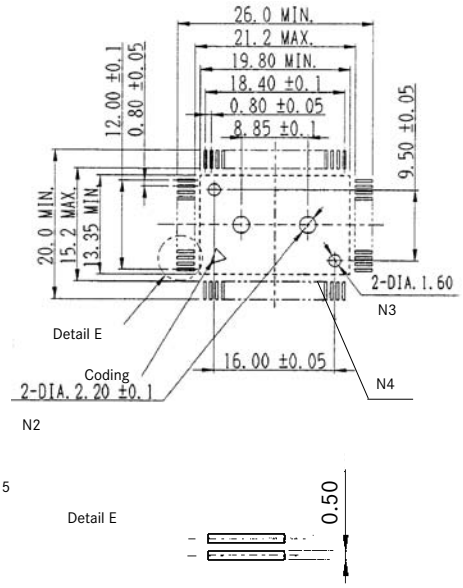

Adapter PCB-Layout

View from Soldering Side

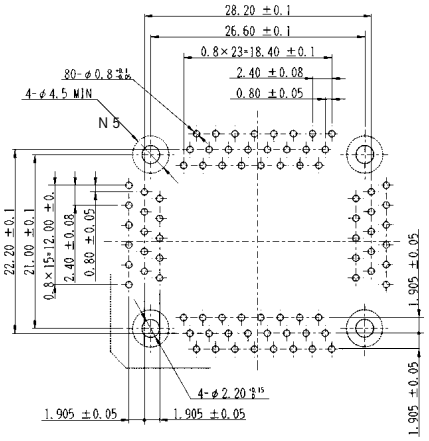

Part Number		Part Number for Emulation -Adapter
IC149-080-012-B5	(without positioning pins)	ICP-080-3
IC149-080-112-B5	(with positioning pins)	ICP-080-3

Notes:
N2: These holes are only necessary when fixing the Socket with screws.
N3: These holes are only necessary for use with positioning pins.
N4: The Socket may be glued to the PC Board within this area.
N5: No conduits within this hatched area.

100 PINS - QFP/TQFP100 (25 X 25 PINS) 0.5 MM PITCH

IC - Dimensions

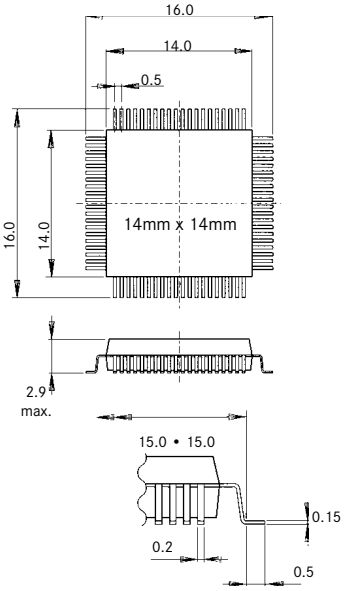

Socket PCB-Layout

Top View from Socket

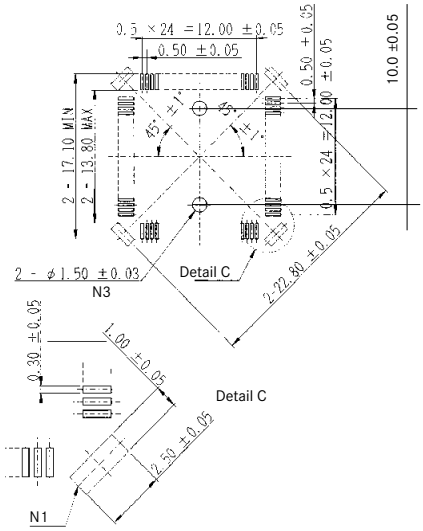

Adapter PCB-Layout

View from Soldering Side

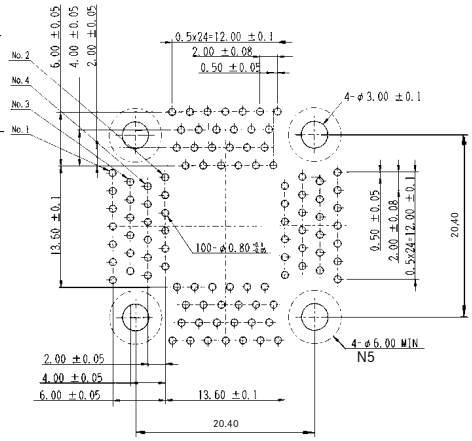

Info: Socket height = 13.20mm

Part Number				Part Number for Emulation -Adapter
IC149-100-025-B5	(without positioning pins)	IC149-100-025-B51	(without SMT fixing metal)	ICP-100-5
IC149-100-125-B5	(with positioning pins)	IC149-100-125-B51	(without SMT fixing metal)	ICP-100-5

100 PINS - QFP/TQFP100 (25 X 25 PINS) 0.50 MM PITCH

IC - Dimensions

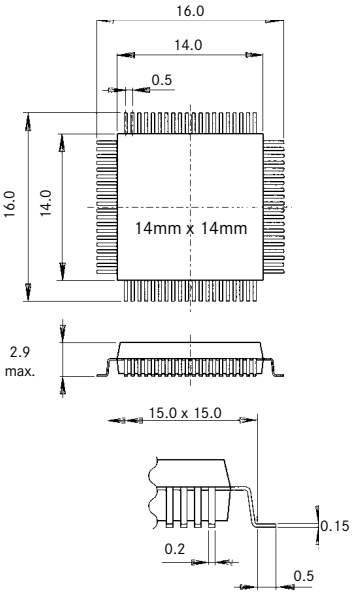

Socket PCB-Layout

Top View from Socket

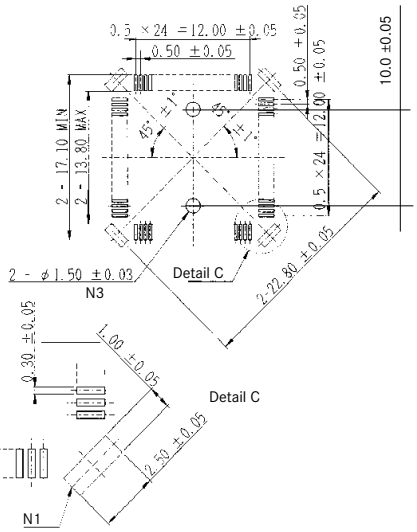

Adapter PCB-Layout

View from Soldering Side

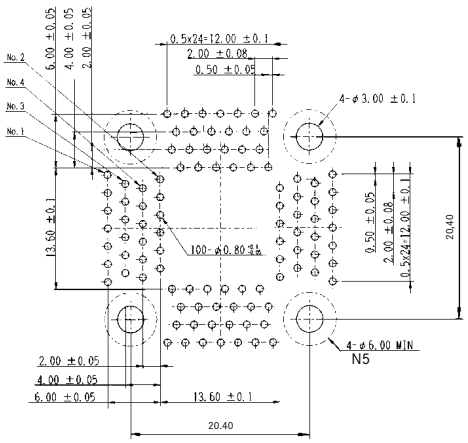

Info: Socket height = 15.40mm

Part Number				Part Number for Emulation -Adapter
IC149-100-054-B5	(without positioning pins)	IC149-100-054-B51	(without SMT fixing metal)	ICP-100-5
IC149-100-154-B5	(with positioning pins)	IC149-100-154-B5	(without SMT fixing metal)	ICP-100-5

Notes:
N1: Metal soldering Tab Clip. Socket may be stabilized by soldering (Reflow) in these 4 areas.
N3: These holes are only necessary for use with positioning pins.
N5: No conduits within this hatched area.

100 PINS - BQFP100 (25 X 25 PINS) 0.635 MM PITCH

IC - Dimensions

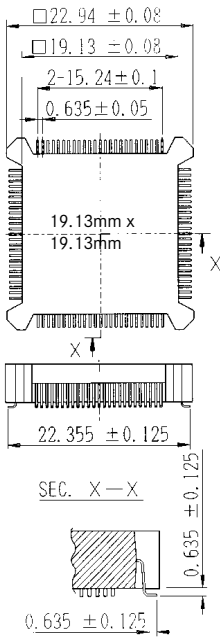

Socket PCB-Layout

Top View from Socket

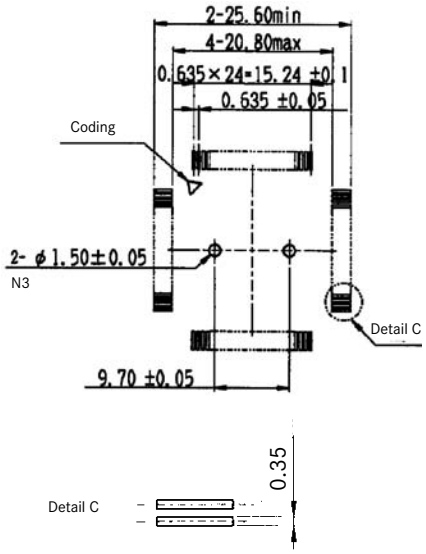

Adapter PCB-Layout

View from Soldering Side

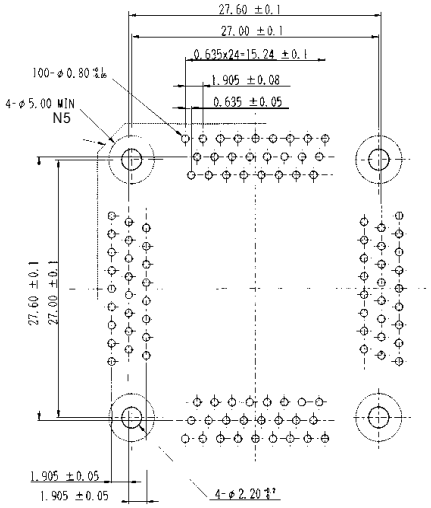

Part Number		Part Number for Emulation -Adapter
IC149-100-028-B5	(without positioning pins)	ICP-100-6

100 PINS - QFP/TQFP100 (20 X 30 PINS) 0.65 MM PITCH

IC - Dimensions

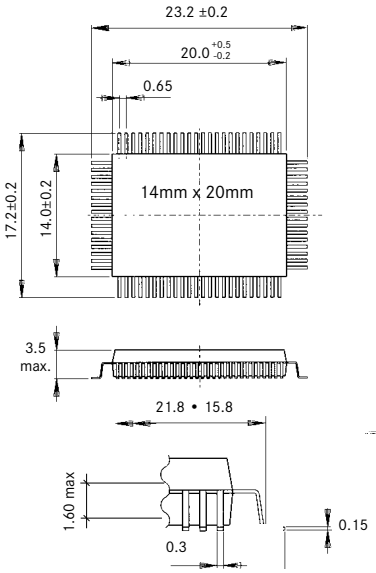

Socket PCB-Layout

Top View from Socket

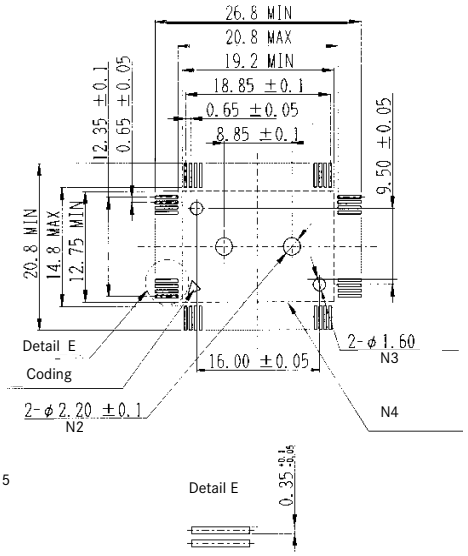

Adapter PCB-Layout

View from Soldering Side

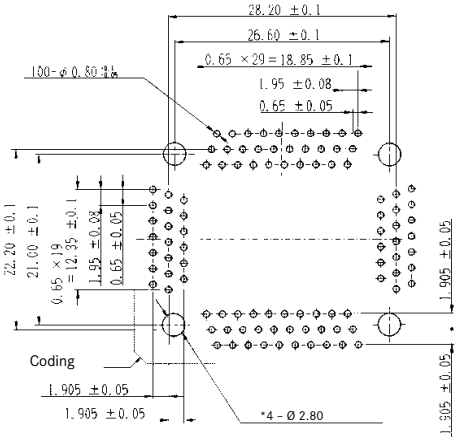

Note:
PC Board thickness from 1.2 – 3.4 mm

Part Number		Part Number for Emulation -Adapter
IC149-100-014-B5	(without positioning pins)	ICP-100-4-4 (see note) with 4 x M2.0 – 12.0 mm
IC149-100-114-B5	(with positioning pins)	ICP-100-4-4 (see note) with 4 x M2.0 – 12.0 mm

Notes:
N2: These holes are only necessary when fixing the Socket with screws.
N3: These holes are only necessary for use with positioning pins.
N4: The Socket may be glued to the PC Board within this area.
N5: No conduits within this hatched area.

112 PINS - QFP/TQFP112 (28 X 28 PINS) 0.65 MM PITCH

IC - Dimensions

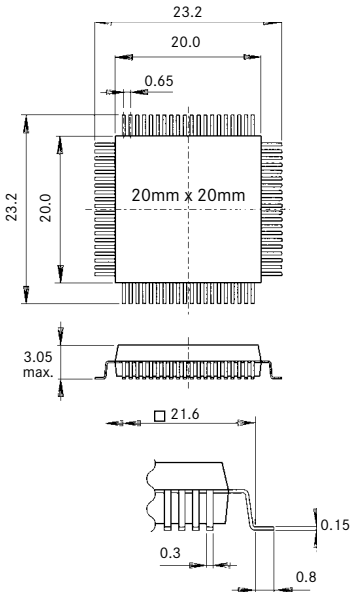

Socket PCB-Layout

Top View from Socket

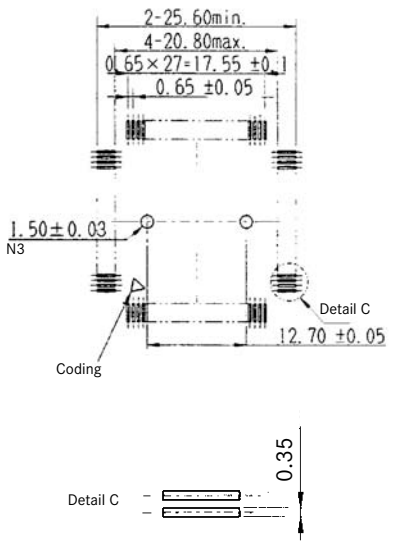

Adapter PCB-Layout

View from Soldering Side

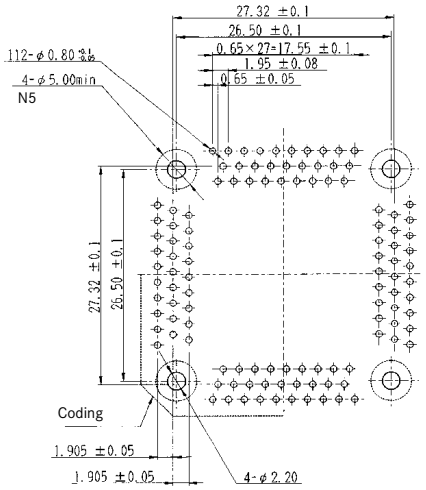

Part Number		Part Number for Emulation -Adapter
IC149-112-042-B5	(without positioning pins)	ICP-112-2
IC149-112-142-B5	(with positioning pins)	ICP-112-2

120 PINS - QFP/TQFP120 (30 X 30 PINS) 0.4 MM PITCH

IC - Dimensions

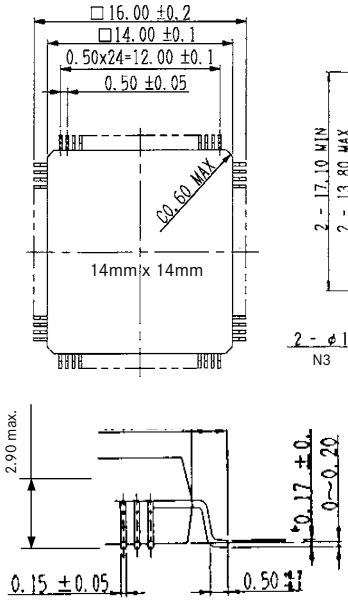

Socket PCB-Layout

Top View from Socket

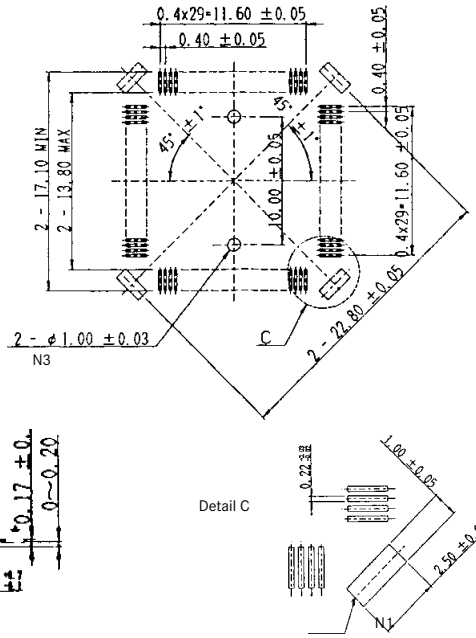

Adapter PCB-Layout

View from Soldering Side

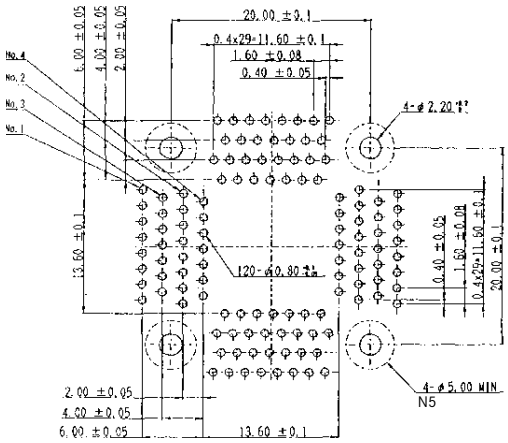

Part Number		Part Number for Emulation -Adapter
IC149-120-043-B5	(without positioning pins)	ICP-120-2
IC149-120-143-B5	(with positioning pins)	ICP-120-2

Notes:
N1: Metal soldering Tab Clip. Socket may be stabilized by soldering (Reflow) in these 4 areas.
N2: These holes are only necessary when fixing the Socket with screws.
N3: These holes are only necessary for use with positioning pins.
N5: No conduits within this hatched area.

128 PINS - QFP/TQFP120 (32 X 32 PINS) 0.8 MM PITCH

IC - Dimensions

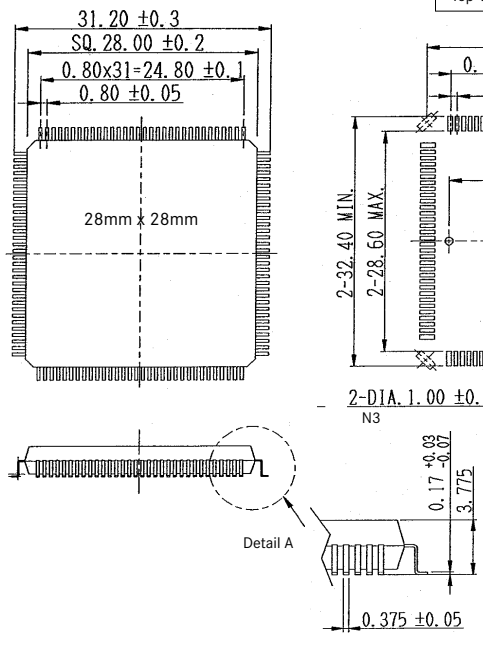

Socket PCB-Layout

Top View from Socket

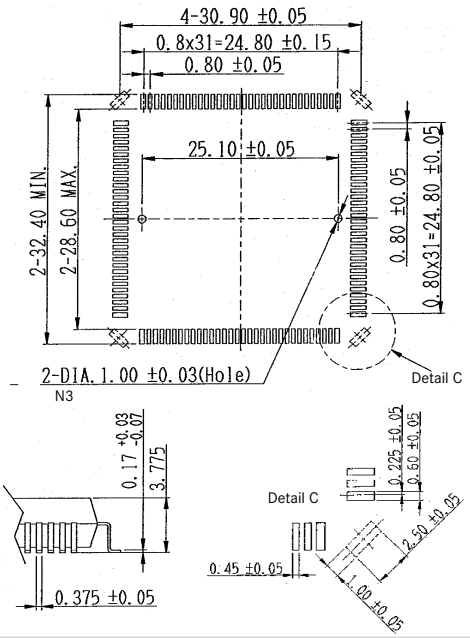

Adapter PCB-Layout

View from Soldering Side

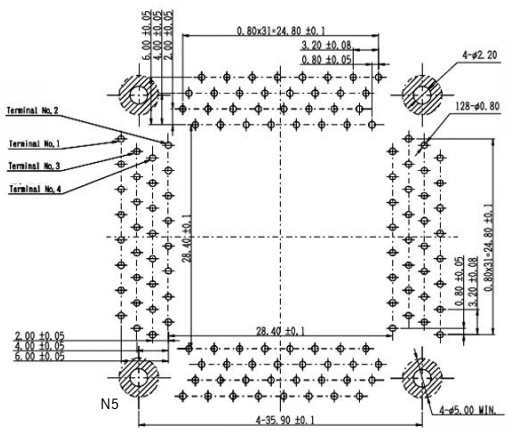

Part Number		Part Number for Emulation -Adapter
IC149-128-080-B5	(without positioning pins)	ICP-128-2
IC149-128-180-B5	(with positioning pins)	ICP-128-2

132 PINS - QFP/TQFP132 (33 X 33 PINS) 0.635 MM PITCH

IC - Dimensions

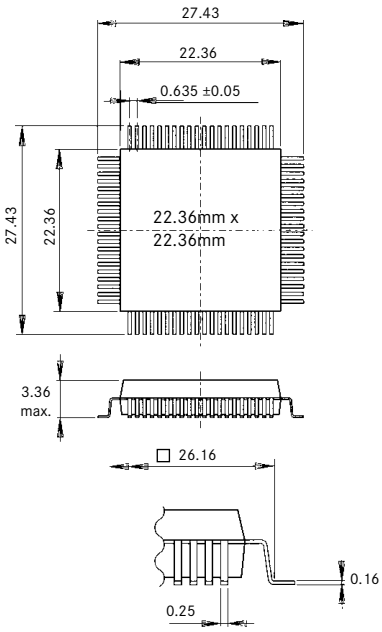

Socket PCB-Layout

Top View from Socket

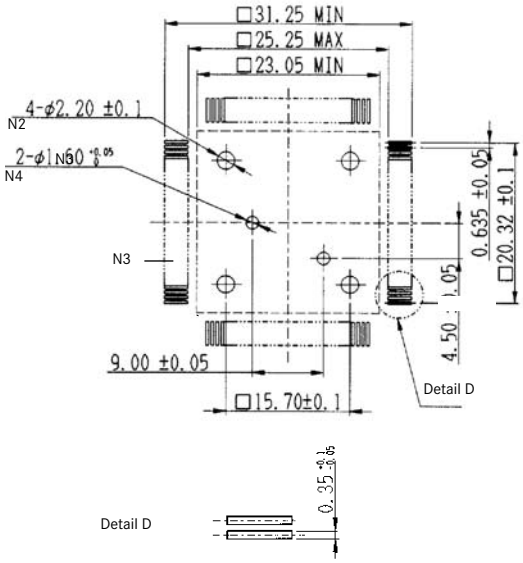

Part Number		Part Number for Emulation -Adapter
IC149-132-015-B5	(without positioning pins)	Not available for this socket
IC149-132-115-B5	(with positioning pins)	Not available for this socket

Notes:
N2: These holes are only necessary when fixing the Socket with screws.
N3: These holes are only necessary for use with positioning pins.
N4: The Socket may be glued to the PC Board within this area.
N5: No conduits within this hatched area.

144 PINS - QFP/TQFP144 (36 X 36 PINS) 0.5 MM PITCH

IC - Dimensions

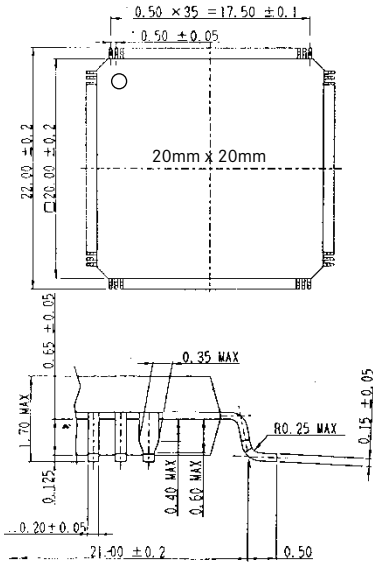

Socket PCB-Layout

Top View from Socket

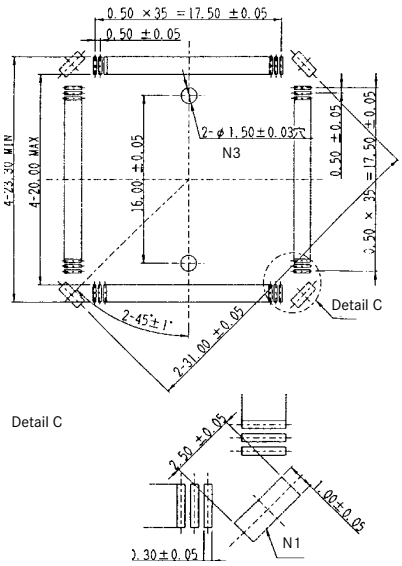

Adapter PCB-Layout

View from Soldering Side

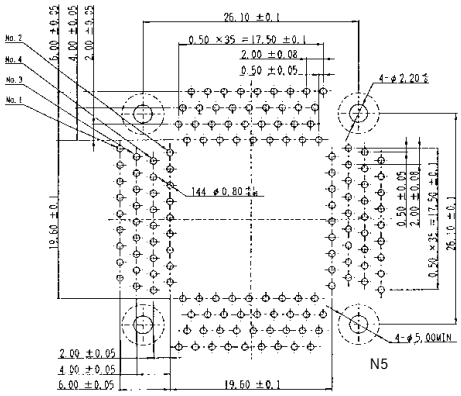

Part Number				Part Number for Emulation -Adapter
IC149-144-045-B5	(without positioning pins)	IC149-144-045-B51	(without SMT fixing metal)	ICP-144-1
IC149-144-145-B5	(with positioning pins)			ICP-144-1

160 PINS - QFP/TQFP160 (40 X 40 PINS) 0.5 MM PITCH

IC - Dimensions

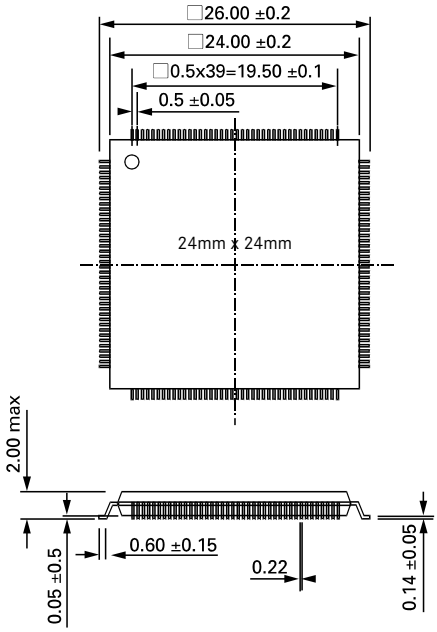

Socket PCB-Layout

Top View from Socket

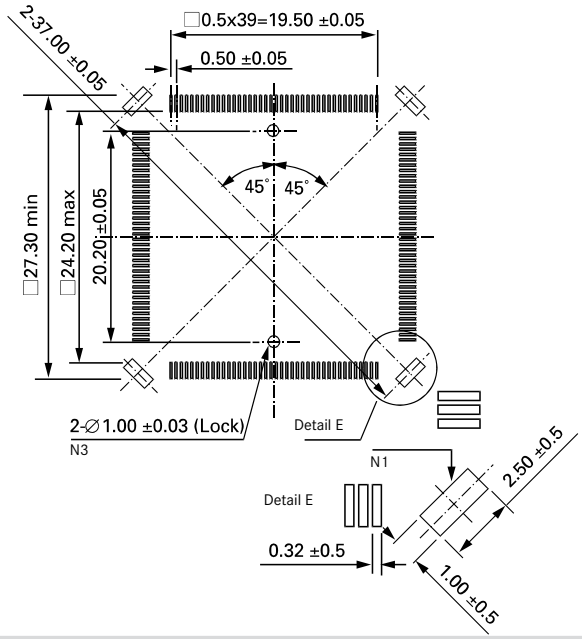

Part Number				Part Number for Emulation -Adapter
IC149-160-050-B5	(without positioning pins)	IC149-100-054-B51	(without SMT fixing metal)	Not available for this socket

Notes:
N1: Metal soldering Tab Clip. Socket may be stabilized by soldering (Reflow) in these 4 areas.
N3: These holes are only necessary for use with positioning pins.
N5: No conduits within this hatched area.

160 PINS - QFP/TQFP160 (40 X 40 PINS) 0.65 MM PITCH

IC - Dimensions

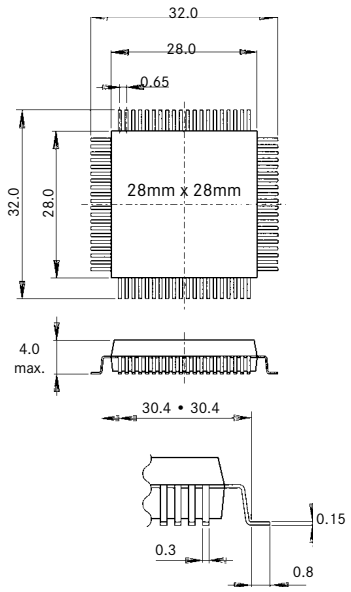

Socket PCB-Layout

Top View from Socket

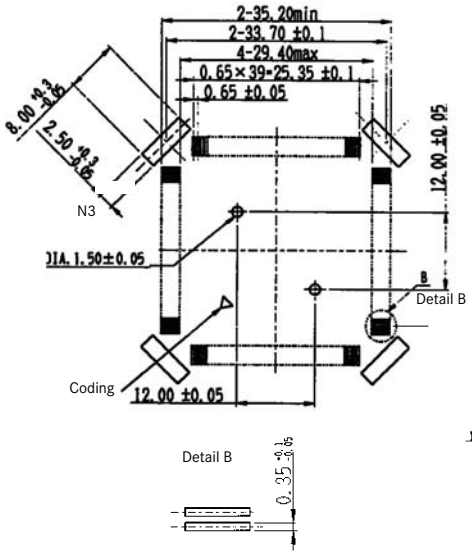

Adapter PCB-Layout

View from Soldering Side

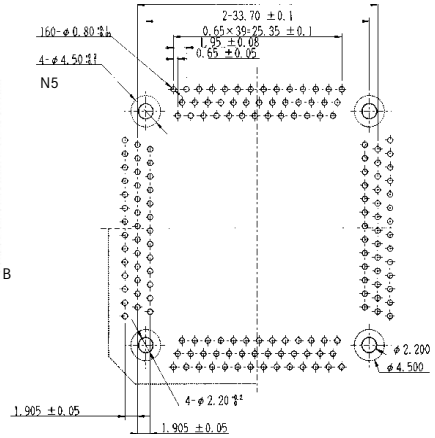

Part Number		Part Number for Emulation -Adapter
IC149-160-023-B5	(without positioning pins)	ICP-160-1
IC149-160-123-B5	(with positioning pins)	ICP-160-1

176 PINS - QFP/TQFP176 (44 X 44 PINS) 0.5 MM PITCH

IC - Dimensions

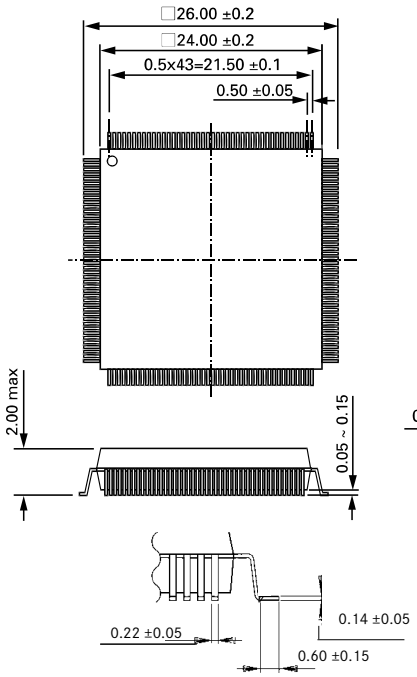

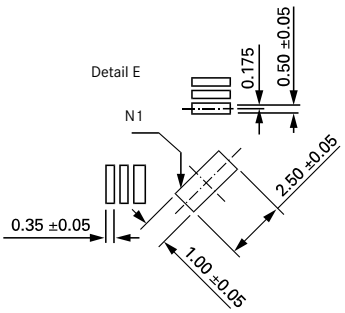

Socket PCB-Layout

Top View from Socket

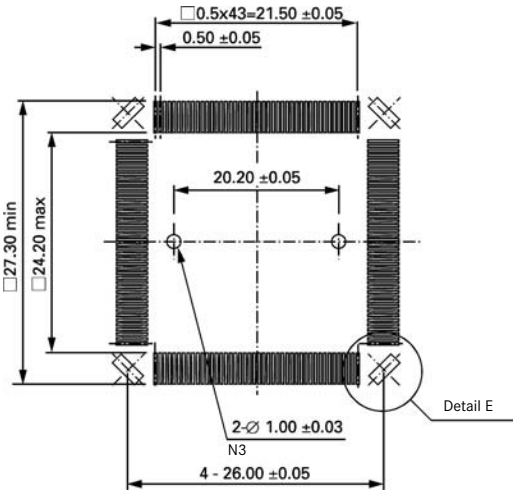

Part Number		Part Number for Emulation -Adapter
IC149-176-066-B5	(without positioning pins)	Not available for this socket
IC149-176-166-B5	(with positioning pins)	Not available for this socket

Notes:
N1: Metal soldering Tab Clip. Socket may be stabilized by soldering (Reflow) in these 4 areas.
N3: These holes are only necessary for use with positioning pins.
N5: No conduits within this hatched area.

208 PINS - QFP/TQFP208 (52 X 52 PINS) 0.5 MM PITCH

IC - Dimensions

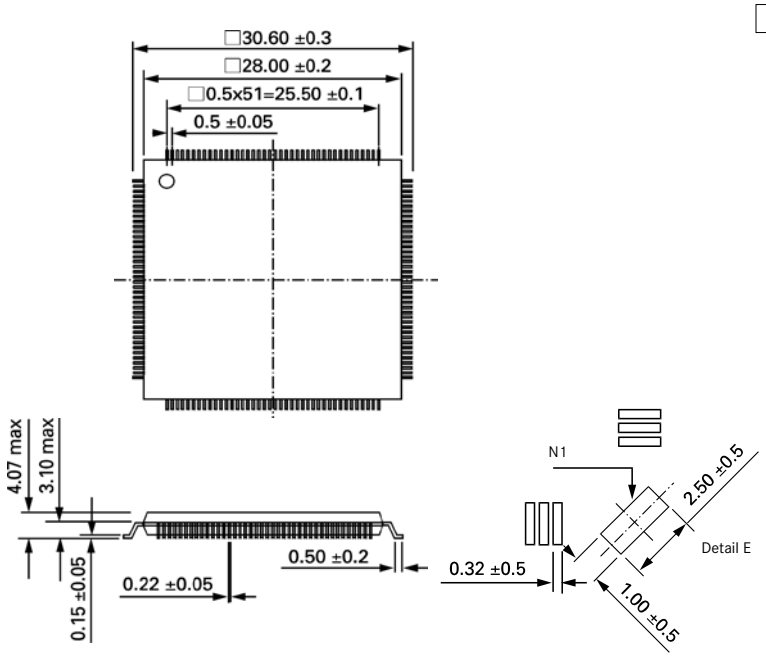

Socket PCB-Layout

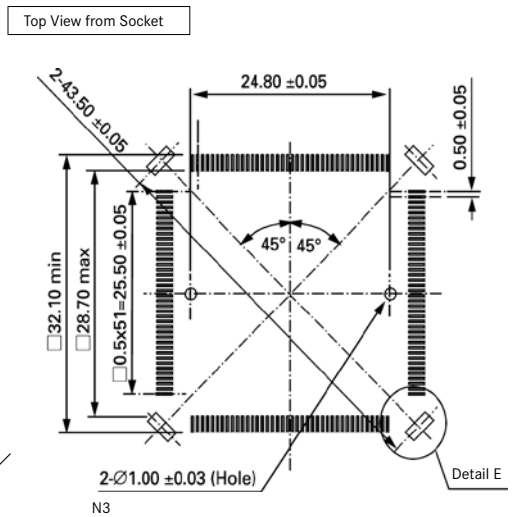

Part Number		Part Number for Emulation -Adapter
IC149-208-061-B5	(without positioning pins)	Not available for this socket
IC149-208-161-B5	(with positioning pins)	Not available for this socket

240 PINS - QFP/TQFP240 (60 X 60 PINS) 0.5 MM PITCH

IC - Dimensions

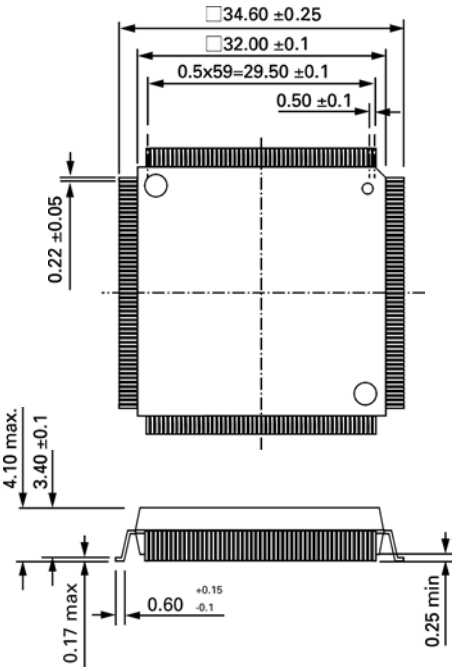

Socket PCB-Layout

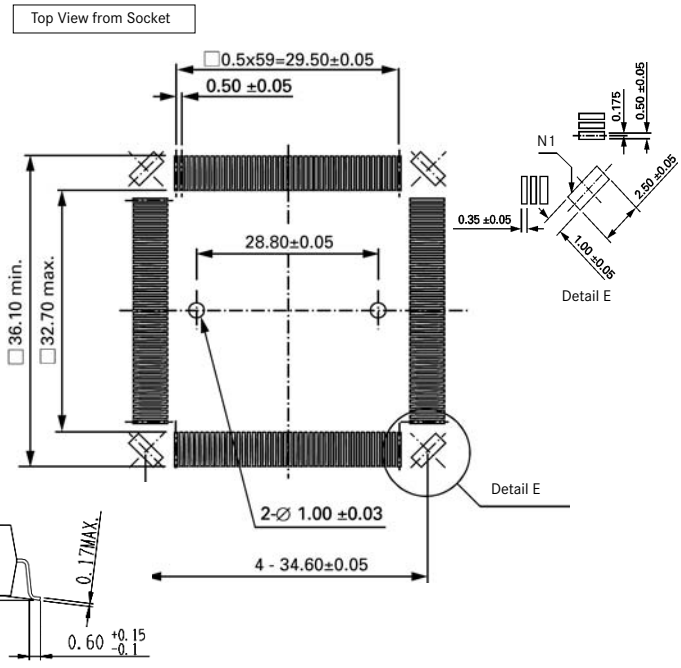

Part Number		Part Number for Emulation -Adapter
IC149-240-067-B5	(without positioning pins)	Not available for this socket
IC149-240-167-B5	(with positioning pins)	Not available for this socket

Notes:
N1: Metal soldering Tab Clip. Socket may be stabilized by soldering (Reflow) in these 4 areas.
N3: These holes are only necessary for use with positioning pins.

SPECIFICATIONS

Insulation Resistance:	500MΩ min. at 500V DC
Withstanding Voltage:	250V AC for 1 minute
Contact Resistance:	30mΩ max. at 10mA / 20mV
Current Rating:	1A max.
Operating Temperature Range:	-55°C ~ +85°C
Soldering Temperature:	220°C max. at 60 secs. max / 260° Peak
Insertion/Extraction Force:	0.147 N / Pin min., 1.47 N / Pin max.
Mating Cycles:	20 insertions max.

MATERIALS AND FINISH

Housing: PA, glass filled, UL94V-0 rated
Contact: Copper Alloy, SnBi (3.0 ~ 7.0μm) plating

FEATURES

- Low profile design (5.0 and 4.6mm height)
- 2 different terminal styles available
- Designed for automatic mounting (SMT type)

INFO
For PLCC DIP (TH) versions (1C160Z-****400)
Please contact Yamaichi

PART NUMBER

IC160Z – 020 4 – ** 0 1

- Series No.
- No. of Contact Pins
- No. of Sides with Contacts
- Terminal Style
  24 = Inside Leads (Type 1)
  30 = Outside Leads (Type 2)
- 0 = Without Positioning Pin
  1 = With Positioning Pin
- Packaging:
  Unmarked =Tray
  1 = Embossed Tape
  2 = Tube

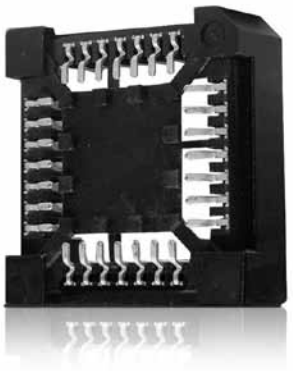

AVAILABLE BODY FORMS

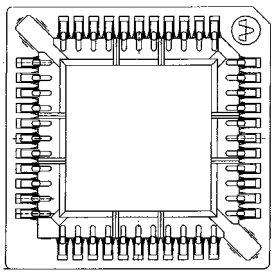

Square

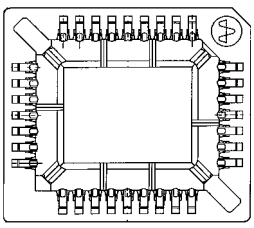

Rectangle

Height Dimension Square Form
(both terminal types)

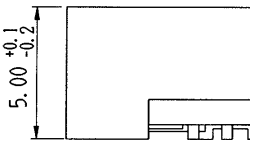

Height Dimension Rectangle Form
(both terminal types)

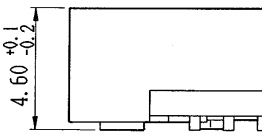

AVAILABLE TERMINAL TYPES

IC160Z-0**4-24** (Type1)

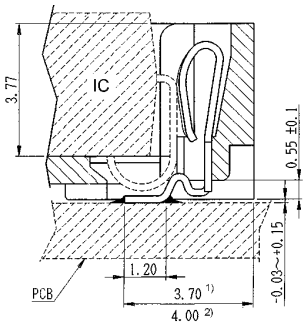

1) For pins 20, 28, 44
2) For pins 52, 68, 84

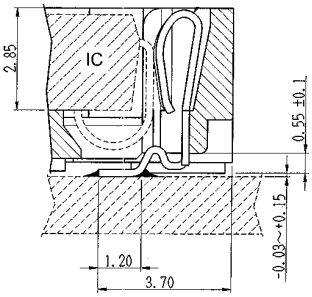

For pins 32 only

IC160Z-0**4-30** (Type 2)

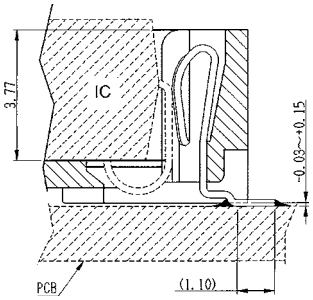

For pins 20, 28, 44, 52, 68, 84

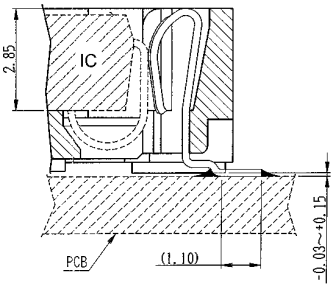

For pins 32 only

OUTLINE SOCKET DIMENSIONS TERMINAL TYPE 1

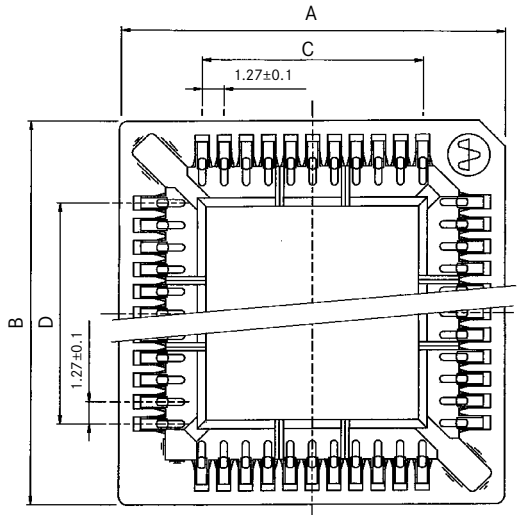

OUTLINE SOCKET DIMENSIONS TERMINAL TYPE 2

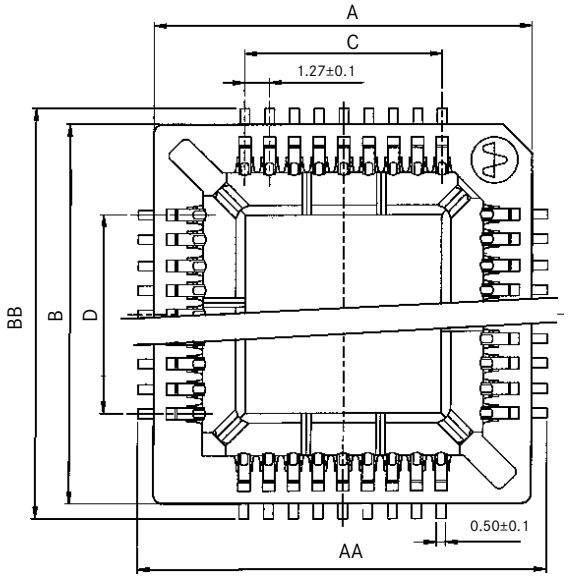

RECOMMENDED PCB LAYOUT

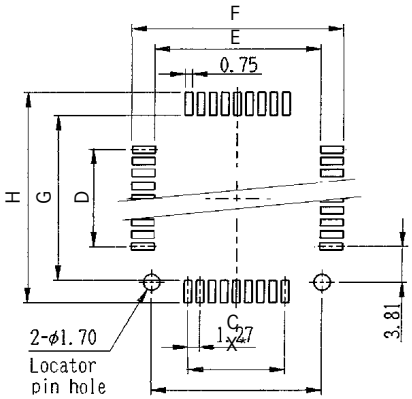

Top View from Socket

*Dimensions for X

IC160Z-0324-301	=	17.78
IC160Z-0324-3011	=	17.78
IC160Z-0444-301	=	20.32
IC160Z-0444-3011	=	20.32

All other part numbers have no pin locator holes

Part Number	Pin Count	A	AA	B	BB	C	D	E	F	J	H
IC160Z-0204-240	20	14.46	-	14.46	-	5.08	5.08	6.27	10.27	6.27	10.27
IC160Z-0204-2401	20	14.46	-	14.46	-	5.08	5.08	6.27	10.27	6.27	10.27
IC160Z-0204-300	20	14.46	16.06	14.46	16.06	5.08	5.08	12.26	17.06	12.26	17.06
IC160Z-0204-3001	20	14.46	16.06	14.46	16.06	5.08	5.08	12.26	17.06	12.26	17.06
IC160Z-0284-240	28	17.00	-	17.00	-	7.62	7.62	8.81	12.81	8.81	12.81
IC160Z-0284-2401	28	17.00	-	17.00	-	7.62	7.62	8.81	12.81	8.81	12.81
IC160Z-0284-3001	28	17.00	18.60	17.00	18.60	7.62	7.62	14.80	19.60	14.80	19.60
IC160Z-0324-240	32	19.50	-	17.00	-	10.16	7.62	11.35	15.35	8.81	12.81
IC160Z-0324-2401	32	19.50		17.00	-	10.16	7.62	11.35	15.35	8.81	12.81
IC160Z-0324-2402	32	19.50	-	17.00	-	10.16	7.62	11.35	15.35	8.81	12.81
IC160Z-0324-300	32	19.50	21.10	17.00	18.60	10.16	7.62	17.30	22.10	14.80	19.60
IC160Z-0324-301	32	19.50	21.10	17.00	18.60	10.16	7.62	17.30	22.10	14.80	19.60
IC160Z-0444-240	44	22.08	-	22.08	-	12.70	12.70	13.89	17.89	13.89	17.89
IC160Z-0444-2401	44	22.08	-	22.08	-	12.70	12.70	13.89	17.89	13.89	17.89
IC160Z-0444-300	44	22.08	23.68	22.08	23.68	12.70	12.70	19.88	24.68	19.88	24.68
IC160Z-0444-301	44	22.08	23.68	22.08	23.68	12.70	12.70	19.88	24.68	19.88	24.68
IC160Z-0684-240	68	30.30	-	30.30	-	20.32	20.32	21.51	25.51	21.51	25.51
IC160Z-0684-2401	68	30.30	-	30.30	-	20.32	20.32	21.51	25.51	21.51	25.51
IC160Z-0684-300	68	30.30	31.30	30.30	31.30	20.32	20.32	27.50	32.30	27.50	32.30
IC160Z-0844-240	84	35.58	-	35.58	-	25.40	25.40	26.59	30.59	26.59	30.59
IC160Z-0844-2401	84	35.58	-	35.58	-	25.40	25.40	26.59	30.59	26.59	30.59
IC160Z-0844-300	84	35.58	36.38	35.58	36.38	25.40	25.40	32.58	37.38	32.58	37.38
IC160Z-0844-3001	84	35.58	36.38	35.58	36.38	25.40	25.40	32.58	37.38	32.58	37.38

OUTLINE IC DIMENSIONS

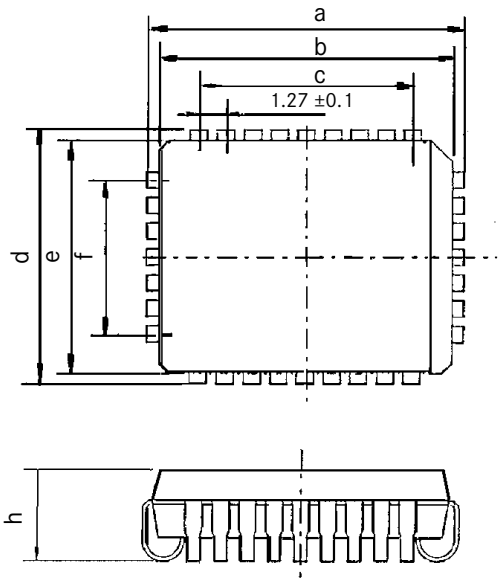

Pin Count	a	b	c	d	e	f	g
20	9.70 ~ 10.04	8.89 ~ 9.05	4.88 ~ 5.18	9.70 ~ 10.04	8.89 ~ 9.05	4.88 ~ 5.18	4.12 ~ 4.80
28	12.25 ~ 12.65	11.35 ~ 11.64	7.42 ~ 7.72	12.25 ~ 12.65	11.35 ~ 11.64	7.42 ~ 7.72	4.12 ~ 4.80
32	14.81 ~ 15.11	13.89 ~ 14.05	10.01 ~ 10.31	12.24 ~ 12.60	11.35 ~ 11.58	7.47 ~ 7.77	2.54 ~ 3.81
44	17.34 ~ 17.78	16.40 ~ 16.80	12.55 ~ 12.85	17.34 ~ 17.78	16.40 ~ 16.80	12.55 ~12.85	4.12 ~ 4.80
52	19.90 ~ 20.20	19.05 ~ 19.21	15.04 ~ 15.34	19.90 ~ 20.20	19.05 ~ 19.21	15.04 ~ 5.34	4.12 ~ 4.80
68	24.98 ~ 25.40	24.10 ~ 24.33	20.12 ~ 20.42	24.98 ~ 25.40	24.10 ~ 24.33	20.12 ~ 20.42	4.09 ~ 4.83
84	30.03 ~ 30.43	29.18 ~ 29.42	25.20 ~ 25.50	30.03 ~ 30.43	29.18 ~ 29.42	25.20 ~ 25.50	4.19 ~ 4.83

PACKING UNITS

	20 pins	28 pins	30 pin	44 pins	52 pins	68 pins	84 pins
Pieces/Tray	60	50	50	40	32	24	18
Pieces/Reel	500	500	500	400	400	250	150
Pieces/Tube	-	-	25	-	-	-	-

SPECIFICATIONS AND DRAWINGS ARE SUBJECT TO ALTERATION WITHOUT PRIOR NOTICE - DIMENSIONS IN MILLIMETER

SPECIFICATIONS

Voltage Rating:	75V
Current Rating:	1 A
Insulation Resistance:	500MΩ min. at 500V DC
Withstanding Voltage:	250 V AC for 1 minute
Contact Resistance:	30mΩ max. at 10mA / 20mV
Operating Temperature:	-55°C ~ +85°C
Soldering Temperature:	220°C max. for 2 minutes max. (VPS) 250°C max. for 1 minute max. (IR)
Mating Cycles:	10 insertions max.

PART NUMBER

IC179Z – 28 450 - 5 0 0 1

- Series No.
- No. of Contact Pins
- IC Row Spacing (MIL)
- Design Number
- 0 = Without Dummy Cover
- 0= Without Positioning Pin
1= With Positioning Pin
- Unmarked = Tray Packaging
1 = Tape & Reel Packaging

MATERIALS AND FINISH

Insulation, Cover:	Polyphenylenesulphide (PPS), UL94V-0
Contacts:	Beryllium Copper (BeCu), SnBi (3.0 ~ 7.0µm) plating

FEATURES

- SMT type SOP production socket
- Same pattern as IC
- Low profile design: for 28 and 32 pins, height = 3.9 mm
for 44 pins, height = 4.3 mm

OUTLINE SOCKET DIMENSIONS

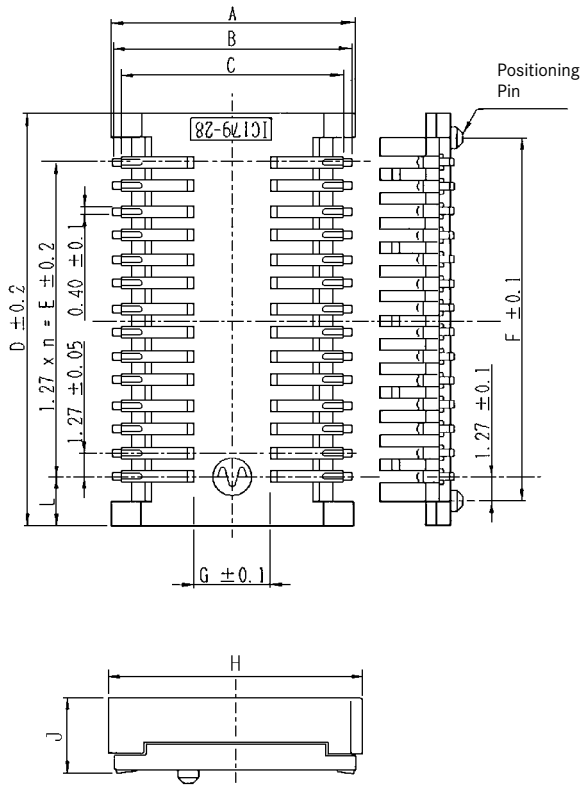

CONTACT POSITION DETAIL

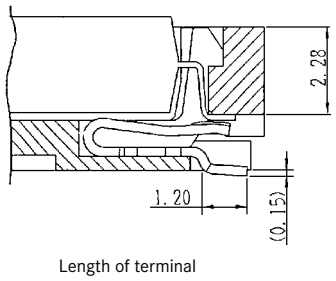

RECOMMENDED PCB LAYOUT

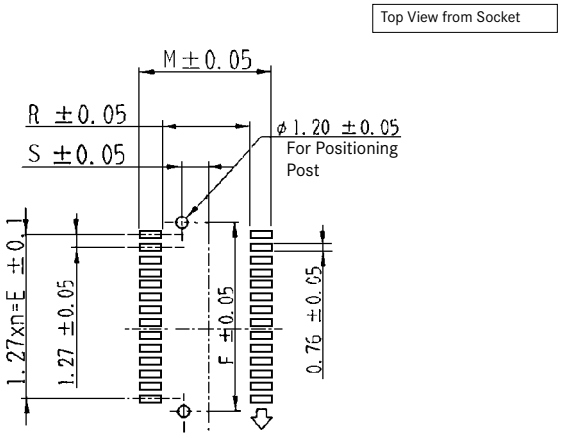

APPLICABLE SOCKET DIMENSIONS

Part Number	Pin Count	A	B	C	D	1.27 x n = E	F	G	H	J	M	R	S
IC179Z-28450-500	28	12.80	12.60	11.66	21.60	1.27x13=16.51	19.05	4.0	13.50	3.9	13.60	9.20	2.54
IC179Z-28450-501	28	12.80	12.60	11.66	21.60	1.27x13=16.51	19.05	4.0	13.50	3.9	13.60	9.20	2.54
IC179Z-32525-500	32	15.10	15.00	13.90	24.25	1.27x15=19.05	21.59	6.3	17.10	3.9	15.90	11.50	3.81
IC179Z-32525-501	32	15.10	15.00	13.90	24.25	1.27x15=19.05	21.59	6.3	17.10	3.9	15.90	11.50	3.81
IC179Z-44600-500	44	17.00	16.90	15.80	34.75	1.27x21=26.67	29.21	8.2	22.00	4.3	17.80	13.40	5.08
IC179Z-44600-5001	44	17.00	16.90	15.80	34.75	1.27x21=26.67	29.21	8.2	22.00	4.3	17.80	13.40	5.08
IC179Z-44600-501	44	17.00	16.90	15.80	34.75	1.27x21=26.67	29.21	8.2	22.00	4.3	17.80	13.40	5.08

RECOMMENDED IC DIMENSIONS

Part Number	Pin Count	Si	T	U	V	W (max.)
IC179Z-28450-5**(*)	28	11.50 -12.25	8.00 - 9.00	18.70	0.60 -1.20	2.70
IC179Z-32525-5**(*)	32	13.80 -14.60	10.50 -11.50	21.60	0.60 -1.20	3.10
IC179Z-44600-5**(*)	44	15.64 -16.44	12.30 -13.40	30.50	0.60 -1.20	3.10

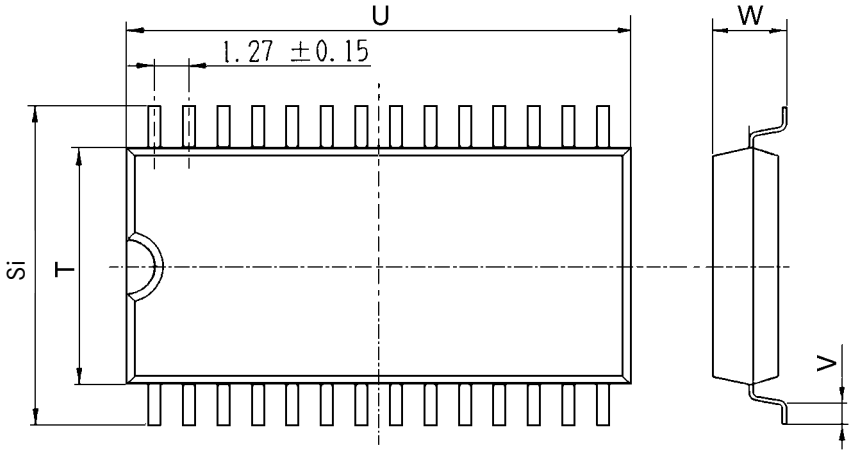

SPECIFICATIONS

Insulation Resistance:	$10^{12}\Omega$ min.
Withstanding Voltage:	1,000 VRMS for 1 minute
Contact Resistance:	10mΩ max. at 10mA / 20mV
Current Rating:	1A max.
Operating Temperature Range:	-55°C ~ +125°C
Acceptable Pin Diameter:	0.46 ±0.05
Mating Cycles:	100 insertions min.

MATERIALS AND FINISH

Housing: PCT, 30% glass filled Polyester, UL94V-0

Contact: Inner clip – Beryllium Copper (BeCu), Au over Ni (2-3µm)
Outer sleeve – Machined Brass, Sn (5µm) over Ni (2-3µm)

FEATURES

- Custom specific pin counts with grids to 41x41
- Pin-Grid-Array precision-IC-Sockets, with displaced contacts, for picking up of ICs with high packing density.
- Contacts with 6-finger-clip, for low insertion and withdrawal forces

PART NUMBER

YED210 - 321 37 - 0 B S 4

- Series No.
- No. of Contact Pins
- Grid
- Design No.
- Inner Contact Plating B = Gold
- Outer Sleeve Plating S = Solder
- Terminal Style

OUTLINE SOCKET DIMENSIONS (GRID 37 X 37)

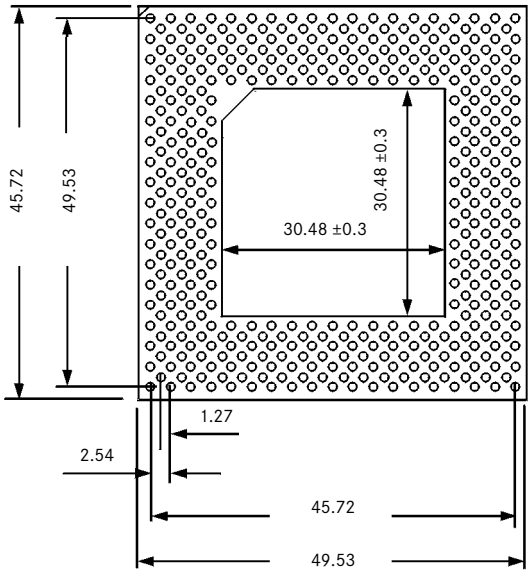

CONTACT POSITION DETAIL

Without Stand-off pins (Standard)

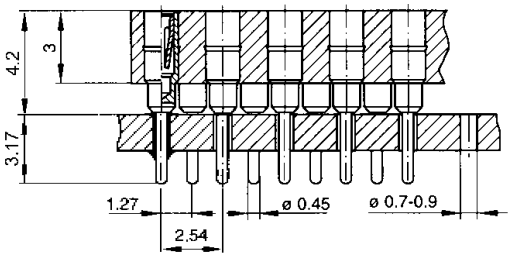

With Stand-off pins

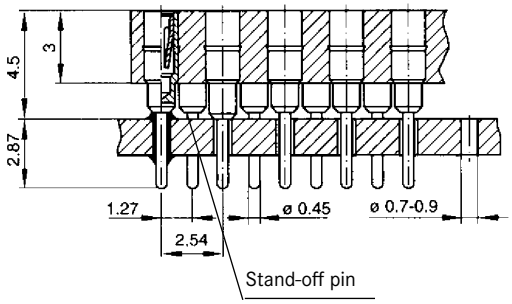

Trading Division

SPECIFICATIONS

Insulation Resistance:	$10^{12}\Omega$ min.
Withstanding Voltage:	1,000VRMS for 1 minute
Contact Resistance:	10mΩ max. at 10mA / 20mV
Current Rating:	1A max.
Operating Temperature Range:	-55°C ~ +125°C
Acceptable Pin Diameter:	0.46 ±0.05
Mating Cycles:	100 insertions min.

MATERIALS AND FINISH

Housing: PCT, 30% Polyester, glass filled UL94V-0

Contact: Inner clip – Beryllium Copper (BeCu), Au over Ni (2-3µm)
Outer sleeve – Machined Brass, Sn over Ni (2-3µm)

FEATURES

- Round tail production PGA sockets with Solder Dip or Wire Wrap terminals
- Best solder ability due to stand-offsINFO
- Low insertion and extraction force, due to 6 contacting leaves per pin
- Any contact pattern available
- Grid sizes >22 x 22 on request

PART NUMBER

YED122 – 064 10 – 0 B S *

- Series No.
- No. of Contact Pins
- Grid
- Design No.
- Inner Contact Plating B = Gold
- Outer Sleeve Plating S = Sn over Ni
- Terminal Structure
  1 = Straight Wire Wrapping Type (L=6.6mm)
  2 = Straight Wire Wrapping Type (L=9.5mm)
  4 = Straight Solder Dip Type (L=2.9mm)

OUTLINE SOCKET DIMENSIONS

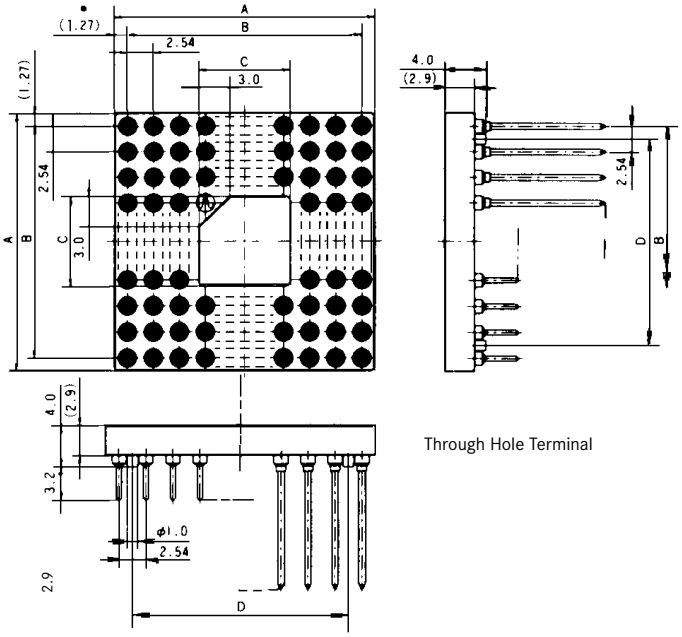

Through Hole Terminal

CONTACT POSITION DETAIL

Through Hole Terminal

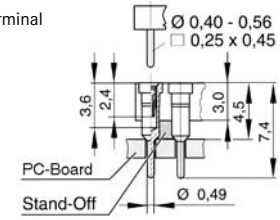

Wire Wrapping Terminal

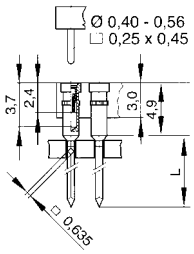

*Overview of contact patterns available on www.yamaichi.eu

Part Number	Pin Count	A	B	C	D
*5 x 5	25	12.62	2.54x 4=10.16	–	–
6 x 6	36	15.16	2.54x 5=12.70	–	–
7 x 7	49	17.70	2.54x 6=15.24	–	–
8 x 8	49	20.24	2.54x 7=17.78	10.16	–
9 x 9	56	22.78	2.54x 8=20.32	12.70	–
10 x 10	84	25.32	2.54x 9=22.86	10.16	20.32
11 x 11	96	27.86	2.54x10=25.40	12.70	22.86
12 x 12	128	30.40	2.54x11=27.94	8.89	25.40
13 x 13	144	32.94	2.54x12=30.48	11.43	27.94
14 x 14	160	35.48	2.54x13=33.02	13.97	30.48
15 x 15	200	38.02	2.54x14=35.56	11.43	33.02
17 x 17	240	43.10	2.54x16=40.64	17.78	38.10
18 x 18	288	45.64	2.54x17=43.18	15.24	40.64
19 x 19	336	48.18	2.54x18=45.72	11.43	43.18
20 x 20	364	50.72	2.54x19=48.26	13.97	45.72
21 x 21	441	53.26	2.54x 20=50.80	–	–
22 x 22	484	55.80	2.54x21=53.34	–	–

1. General

1.1 Our conditions of sale and delivery (in what follows "terms of business") apply exclusively to all of our business relationships with entrepreneurs, as understood in § 14 BGB - German Civil Code - (in what follows "purchasers"), as of 1st January 2011, whether entered into for the first time, ongoing or to be entered into in the future.They are also valid even in the event that when the respective business relationship is concluded they are not then referred to again.
1.2 Terms of our contractual partners that differ from our own terms of business will not be recognised unless we have expressly agreed to their validity in writing.

2. Offers, orders, conclusion of a contract

2.1 Our offers are in principle non-binding and subject to confirmation unless they are explicitly designated as binding offers. The sending of our price list(s) is not to be regarded as an offer. The technical information, details of use and product descriptions contained in our brochures and other sales documents contain no offer to sign a guarantee agreement as it is outlined in § 443 BGB**.
2.2 Ordering a product and/or service includes the binding offer on the part of the purchaser to purchase that product or service. We are entitled to accept the contractual offer implicit in the order within two weeks of receiving the order. The acceptance of the offer can be made by us either in writing or by means of the delivery/execution to/for the purchaser of the product/service ordered. We reserve the right to refuse orders and to do so without written declaration or providing more detailed reasons for such decisions. If in doubt, no response from us after the expiry of the deadline for acceptance should be taken as rejection.
2.3 If the order is made electronically we will confirm receipt of the order immediately. The confirmation of receipt itself still does not constitute any binding acceptance of the order; however it can be conjoined with a declaration of acceptance on our part.
2.4 In the case of verbally agreed contracts the scope of service of our deliveries will be determined through our written affirmation of the contract.

3. Delivery

3.1 Partial deliveries or services rendered in part are permissible and oblige our contractual partner to pay the proportional price unless the partial delivery or service is unacceptable to them.
3.2. For supply contracts on demand the whole set of orders counts as having been ordered by the purchaser one calendar month after the expiry of the deadline agreed for the order or, if there is no agreed deadline, three calendar months after the contract is signed.
3.3. If the purchaser is entitled to the division of the on call contingents and does not conduct the division within one calendar month of the expiry of the respectively agreed order deadline or, if such a deadline has not been set, one month after requested by us, we may divide, deliver and charge for the complete set of orders at our discretion.
3.4 Our deliveries are made "ex works Munich" as long as nothing else has been explicitly agreed upon. In the case of a delivery "ex works" the seller's and purchaser's duties regarding the method of delivery are determined according to the International Commercial Terms (INCOTERMS® 2010) in their current amendment.
3.5 The delivery and service deadlines stated by us are non-binding and subject to confirmation; they can be affected by delay in supply or production, or disruptions to operations. In the case of subsequent contractual amendments or supplementations, the delivery deadlines and dates will begin anew or be postponed correspondingly, even if they had already been confirmed by us beforehand. This holds insofar as in each respective case no differing agreement has been reached with the purchaser.
3.6 Should we default on delivery for reasons for which we are responsible, our liability will be limited to the foreseeable and direct average damage.

4. Default on acceptance

4.1 Should the purchaser default on acceptance or violate other cooperation obligations we are authorised, regardless of our duties in accordance with clauses 3.2 and 3.3, to withdraw from the contract at our discretion and to demand the damages accruing to us through the default or violation, including additional expenses.
4.2 In the case of default on acceptance, the risk of accidental loss or accidental deterioration of the delivered object shall devolve onto the purchaser as of the moment at which they defaulted on acceptance.

5. Prices and payments

5.1 Our prices are to be understood as being principally in net cash in Euros, ex works/warehouse Munich, plus dispatch and packaging costs, insofar as nothing else is agreed in writing. Regulatory charges, customs duties and taxes are to be paid separately in the respective amounts applicable at the time of invoicing.
5.2 In the case of a single order with a net value of less than €100.00 we are entitled to add an additional small-order surcharge of €30.00 to our prices.
5.3 Our prices are valid for six weeks from the day the contract is signed. The agreed prices only apply to the respective completed order.
5.4 Price changes are admissible if there are more than six weeks between the signing of the contract and the agreed delivery date. If, after that period and until the completion of the delivery, the wages, material costs or cost prices (listed prices) rise in line with real market conditions or the exchange rates change, we will be entitled to raise the price appropriately, according to the increase in costs.
5.5 The first three deliveries will only be made if paid for in cash on delivery. For further follow-up deliveries our invoices are to be paid in full in net cash within 30 days of the date on which the invoice or an equivalent statement of payment is issued.
5.6 Payment deadlines are recognised as having been complied with if we have the amount at our disposal within the deadline. Our representatives and/or commissaries must only be paid by way of discharge if they provide evidence of a written authorisation of collection.
5.7 Should the purchaser default on their payment obligation, either in whole or in part, they must from this point onwards – notwithstanding our other further rights - pay default interest in the amount of 5% per year above the base interest rate set by the European Central Bank, insofar as we do not provide evidence of greater damages.
5.8 For each written warning regarding an invoice which is made after entering into default, we are entitled to demand a fixed processing fee of €5.00.
5.9 Offsetting or retention on the part of the purchaser is precluded unless the offsetting or retention claim is undisputed or established to be legally binding. We are entitled to avert the exercise of the right of retention by providing security, even without a guarantee.
5.10 If the purchaser ceases payments, has excessive debts, is subject to an application to open insolvency proceedings, or comes into default on the redemption of due drafts or cheques, our total claims will be due immediately. The same applies in the case of any other substantial decline in the purchaser's financial standing. In these cases we are entitled to demand sufficient security and to withdraw from the contract.

6. Retention of title

6.1 The goods remain our property until the fulfilment of all claims existing between ourselves and the purchaser (goods subject to retention of title), even if individual goods have already been paid for. A pledge or chattel mortgage of the goods subject to retention of title is not permissible.
6.2 In the case of the resale or passing on of goods subject to retention of title – as permitted within the framework of proper business operations – the purchaser procedes to us, at that point in time and up until repayment of all claims due to us, all future claims accruing to them from the resale or passing on of the goods to their customers as security, without particular explanations being necessary at a later date. This also extends to outstanding balances, which arise within the framework of the existing current account relationships or with the termination of those kinds of relationships between the purchaser and their customers. If the goods subject to retention of title are resold or passed on together with other objects without a unit price having been agreed for the goods subject to retention of title, the purchaser cedes to us, with priority over any other claims, that part of the total asking price or the total price obtained by the passing on of the goods that corresponds to the price of the goods subject to retention of title invoiced by us. The purchaser is authorised to collect the assigned claims arising from the resale or passing on until this authorisation is revoked; they are however not entitled to use them in any other way e.g. by assignment. The purchaser must make the customer aware of the assignment on our request, as well as issue us with the documents necessary for asserting rights against their customers e.g. invoices, and provide us with all the necessary information. The purchaser shall bear all the costs of the collection and of any possible interventions.

Should the purchaser receive an exchange on the basis of the authorisation granted to them to collect the assigned claim, the property listed in these papers is transferred to us with the recognised right of security. The handing over of the objects of exchange will be replaced by the agreement that the purchaser will take charge of them for us and then immediately deliver them to us with endorsement. If the equivalent value of the claim assigned to us in cheques is paid to the purchaser or to one of their financial institutions, they are obligated to disclose receipt immediately and to then make the payment. Ownership of the cheques is transferred to us, according to our recognised rights, as soon as the purchaser receives them. The handing over of the papers will be replaced by the agreement that the purchaser will take charge of them for us and then immediately deliver them to us with endorsement.

6.3 If the purchaser processes the goods subject to retention of title, transform them or amalgamate them with other objects, this processing, transformation or amalgamation takes place on our behalf. We will immediately become the owner of the objects produced by means of the processing, transformation or amalgamation. Should this not be possible on legal grounds, we and the purchaser agree that we will be the owner of the new objects at every step of the processing, transformation or amalgamation. The purchaser will keep the new objects safe for us with due professional care and diligence. The objects resulting from the processing, transformation or amalgamation count as goods subject to retention of title. In the case of processing, transformation or amalgamation with other objects not belonging to us, we are entitled to co-ownership of the new objects in the ratio of the value of the processed, transformed or amalgamated goods subject to retention of title to the value of the new goods. In the case of sale or rental of the new objects, the purchaser herewith cedes to us their claim deriving from the sale or rental to their customers with all subsidiary rights as security, without further explanations being required at a later date. However, the transfer only applies in the amount that corresponds to the value of the processed, transformed or amalgamated goods subject to retention of title invoiced by us. The share of the claim assigned to us takes priority over the other claim.

6.4 Should the goods subject to retention of title be amalgamated with properties or movables by the purchaser, the purchaser also cedes to us the claim which is otherwise due to them as
salary for the amalgamation with all subsidiary rights as security, without further particular explanations being required.

6.5 If the purchaser defaults on their payment obligation or on the redemption of due exchanges or cheques, either in whole or in part, or excessive debts or suspensions of payment arise, or an insolvency application is filed, we are authorised to immediately take back all goods still under retention of title. We can also make the further rights resulting from the retention of title immediately applicable. The same applies to any other substantial decline in the financial standing of the purchaser.
The purchaser shall grant us or one of our commissaries access to their entire business premises during business hours. Demand for issuance or appropriation does not constitute withdrawal from the contract. We are entitled to utilise the goods subject to retention of title with due professional care and diligence and to pursue our own satisfaction, taking into account the open claims associated with the proceeds.

6.6 Should the value of the security exceed by more than 20% in total our claims against the purchaser resulting from the current business relationship, we are obliged on the request of the purchaser to release the security due to them at their discretion.

7. Claims of the purchaser in relation to defects

7.1 Only our description of the product or that of the manufacturer counts as an agreement on the quality of the goods. Public statements, promotion or advertising on the part of the manufacturer do not constitute contractual information regarding the quality of the goods.

7.2 The purchaser is obligated to fulfil their duties of inspection and notification of defects, as owed in accordance with § 377 HGB – German Code of Commercial Law. Goods delivered by us count as having been approved in conformity with the contract if we do not receive a written notification from the purchaser within 14 days of receipt of the goods, or at the latest 18 days after their delivery ex works, in which is concretely disclosed what complaints are being raised. Quantity differences of less than 5% in mass-produced articles do not constitute entitlement to a claim of defect. Insofar as nothing else is agreed in writing, our deliveries will each be performed to the standard existing at the time the order is made.

7.3 The claims are restricted at our discretion to removal of the defect or delivery of a defect-free item (a supplementary performance). In the case of failure regarding the supplementary performance, the purchaser has the right to depreciate or to withdraw from the contract at their discretion.

7.4 Further claims of the purchaser, in particular those following from damages consequential to a defect, are in principle precluded. This does not apply in the case of malice, gross negligence or breach of fundamental contractual obligations by us, or in the case of injury of life, body or health. The right of the purchaser to withdraw from the contract remains unaffected.

7.5 Liability for defects which can be attributed to unsuitable or inappropriate use, defective assembly – in particular under non-observance of the installation instructions – or start-up by the purchaser or a third party, natural wear and tear, defective or negligent handling, unsuitable operating components or replacement materials, or chemical, electrochemical, electrical, electronic or weather influences is excluded, insofar as the fault cannot be attributed to us.

7.6 The warranty period for material defects ad defects of title is one year.

7.7 The purchaser will not receive guarantees in the legal sense from us. Manufacturers' warranties remain unaffected by this.

8. Liability

We will assume liability for claims for damages made by the purchaser as follows:

a) Liability for personal injury is determined according to legal provisions.
b) Liability for property damage is restricted to €250,000.00 per event and €500,000.00 in total.
c) Liability for financial losses including direct losses and loss of profit is excluded.

The limitations on liability under b) and the disclaimer of liability under c) do not apply insofar as mandatory liability applies for damages to privately used objects in accordance with the law concerning product liability, or in cases of malice, gross negligence or breach of fundamental contractual obligations, or the lack of guaranteed characteristics for damages that are typical and reasonably foreseeable for this type of contract.

9. Other issues, place of fulfilment, place of jurisdiction

9.1 Ancillary verbal agreements only count as part of the contract if they are confirmed by us in writing.

9.2 Should a clause of these contractual conditions be completely or partially void and/or ineffective, the remaining conditions will not be affected. Rather, an ineffective condition should be replaced by another which is as near as possible to the economic intention.

9.3 If the purchaser is a businessman, Munich is the exclusive place of jurisdiction. The same place of jurisdiction applies if at the time of instigation of a lawsuit the purchaser has no general place of jurisdiction in the Federal Republic of Germany. The purchaser is, however, entitled to call upon any responsible court which can be deemed legally responsible.

9.4 The laws of the Federal Republic of Germany apply. The Hague Convention of 1st July 1964, concerning uniform laws regulating international purchases, and the treaty of the United Nations of 11th April 1980, concerning contracts of international sale of movable objects, do not apply.

Valid as of: 12th July 2011

Auf unser Verlangen hat der Besteller die Abtretung dem Kunden bekannt zu geben und uns die zur Geltendmachung der Rechte gegen den Kunden erforderlichen Unterlagen, z.B. Rechnungen, auszuhändigen und die erforderlichen Auskünfte zu erteilen. Alle Kosten der Einziehung und etwaiger Interventionen trägt der Besteller. Erhält der Besteller aufgrund der ihm erteilten Ermächtigung zur Einziehung der abgetretenen Forderung Wechsel, so geht das Eigentum an diesen Papieren mit dem verbrieften Recht sicherungshalber auf uns über. Die Übergabe des Wechsels wird durch die Vereinbarung ersetzt, dass der Besteller sie für uns in Verwahrung nimmt und sie dann unverzüglich indossiert an uns abliefert. Für den Fall, dass der Gegenwert der an uns abgetretenen Forderung in Schecks bei dem Besteller oder bei einem Geldinstitut des Bestellers eingehen sollte, ist dieser zur unverzüglichen Meldung der Eingänge und zur Abführung verpflichtet. Das Eigentum an den Schecks geht mit dem verbrieften Recht auf uns über, sobald sie der Besteller erhält. Die Übergabe der Papiere wird durch die Vereinbarung ersetzt, dass der Besteller sie für uns in Verwahrung nimmt und sie dann unverzüglich indossiert an uns abliefert.

6.3. Verarbeitet der Besteller die Vorbehaltsware, bildet er sie um oder verbindet er sie mit anderen Gegenständen, so erfolgt die Verarbeitung, Umbildung oder Verbindung für uns. Wir werden unmittelbar Eigentümer der durch die Verarbeitung, Umbildung oder Verbindung hergestellten Sache. Sollte dies aus rechtlichen Gründen nicht möglich sein, so sind der Besteller und wir uns darüber einig, das wir in jedem Zeitpunkt der Verarbeitung, Umbildung oder Verbindung Eigentümer der neuen Sache werden. Der Besteller verwahrt für uns die neue Sache mit der Sorgfalt eines ordentlichen Kaufmanns. Die durch Verarbeitung, Umbildung oder Verbindung entstandene Sache gilt als Vorbehaltsware. Bei Verarbeitung, Umbildung oder Verbindung mit anderen, nicht uns gehörenden Gegenständen, steht uns Miteigentum an der neuen Sache in Höhe des Anteils zu, der sich aus dem Verhältnis des Wertes der verarbeiteten, umgebildeten oder verbundenen Vorbehaltsware zum Wert der neuen Sache ergibt. Für den Fall der Veräußerung oder Vermietung der neuen Sache tritt der Besteller an uns hiermit seinen Anspruch aus der Veräußerung oder Vermietung gegen seinen Kunden mit allen Nebenrechten sicherungshalber ab, ohne dass es noch späterer weiterer Erklärungen bedarf. Die Abtretung gilt jedoch nur in Höhe des Betrages, der dem von uns in Rechnung gestellten Wert der verarbeiteten, umgebildeten oder verbundenen Vorbehaltsware entspricht. Der an uns abgetretene Forderungsanteil hat den Vorrang vor der übrigen Forderung.

6.4. Wird die Vorbehaltsware vom Besteller mit Grundstücken oder beweglichen Sachen verbunden, so tritt der Besteller auch seine Forderung, die ihm als Vergütung für die Verbindung zusteht, mit allen Nebenrechten sicherungshalber an uns ab, ohne dass es weiterer besonderer Erklärungen bedarf.

6.5. Kommt der Besteller mit seiner Zahlungspflicht oder der Einlösung fälliger Wechsel oder Schecks ganz oder teilweise in Verzug, liegt eine Überschuldung oder Zahlungseinstellung vor oder ist ein Insolvenzantrag gestellt, so sind wir berechtigt, sämtliche noch unter Eigentumsvorbehalt stehenden Waren sofort an uns zu nehmen; ebenso können wir die weiteren Rechte aus dem Eigentumsvorbehalt sofort geltend machen. Dasselbe gilt bei einer sonstigen wesentlichen Verschlechterung der wirtschaftlichen Verhältnisse des Bestellers. Der Besteller gewährt uns bzw. einem von uns Beauftragten während der Geschäftsstunden Zutritt zu seinen sämtlichen Geschäftsräumen. Das Verlangen der Herausgabe oder die Inbesitznahme stellt keinen Rücktritt vom Vertrag dar. Wir sind berechtigt, die Vorbehaltsware mit der Sorgfalt eines ordentlichen Kaufmanns zu verwerten und uns unter Anrechnung auf die offenen Ansprüche aus deren Erlös zu befriedigen.

6.6. Übersteigt der Wert der Sicherung unsere Ansprüche gegen den Besteller aus der laufenden Geschäftsbeziehung insgesamt um mehr als 20 %, so sind wir auf Verlangen des Bestellers verpflichtet, ihm zustehende Sicherungen nach seiner Wahl freizugeben.

7. Ansprüche des Bestellers bei Mängeln

7.1. Als Beschaffenheit der Ware gilt grundsätzlich nur unsere oder die Produktbeschreibung des Herstellers vereinbart. Öffentliche Äußerungen, Anpreisungen oder Werbung des Herstellers stellen daneben keine vertragsgemäße Beschaffenheitsangabe der Ware dar.

7.2. Der Besteller ist verpflichtet, seinen nach § 377 HGB geschuldeten Untersuchungs- und Rügepflichten nachzukommen. Von uns gelieferte Ware gilt als vertragsgerecht genehmigt, wenn wir nicht binnen 14 Tagen nach Erhalt der Ware, spätestens jedoch 18 Tagen nach deren Auslieferung ab Werk, eine schriftliche Anzeige des Bestellers erhalten, in der konkret mitgeteilt wird, welche Rügen erhoben werden. Mengendifferenzen bei Massenartikeln von weniger als 5% berechtigen nicht zur Mängelrüge. Sofern nichts anderes schriftlich vereinbart ist, werden unsere Lieferungen jeweils in dem bei Bestellung bestehenden Standard vorgenommen.

7.3. Die Ansprüche sind nach unserer Wahl auf Beseitigung des Mangels oder Lieferung einer mangelfreien Sache (Nacherfüllung) beschränkt. Bei Fehlschlagen der Nacherfüllung hat der Besteller das Recht, nach seiner Wahl zu mindern oder vom Vertrag zurückzutreten.

7.4. Weitergehende Ansprüche des Bestellers, insbesondere wegen Mangelfolgeschäden sind grundsätzlich ausgeschlossen. Dies gilt nicht bei Vorsatz, grober Fahrlässigkeit oder Verletzung wesentlicher Vertragspflichten durch uns sowie im Fall der Verletzung des Lebens, des Körpers oder der Gesundheit. Das Recht des Bestellers zum Rücktritt vom Vertrag bleibt unberührt.

7.5. Eine Haftung für Mängel, die durch ungeeignete oder unsachgemäße Verwendung, fehlerhafte Montage – insbesondere unter Nichtbeachtung der Installationsanweisung - bzw. Inbetriebsetzung durch den Besteller oder Dritte, natürliche Abnutzung, fehlerhafte oder nachlässige Behandlung, ungeeignete Betriebsmittel, Austauschwerkstoffe, chemische, elektrochemische, elektrische, elektronische oder Witterungseinflüsse zurückgehen, ist ausgeschlossen, sofern sie nicht auf unser Verschulden zurückzuführen sind.

7.6. Die Gewährleistungsfrist für Sach- und Rechtsmängel beträgt 1 Jahr.

7.7. Garantien im Rechtssinne erhält der Besteller von uns nicht. Herstellergarantien bleiben hiervon unberührt.

8. Haftung

Wir haften für Schadenersatzansprüche des Bestellers wie folgt:

a) Die Haftung für Personenschäden richtet sich nach den gesetzlichen Bestimmungen.
b) Die Haftung für Sachschäden ist auf € 250.000,00 je Schadenereignis und € 500.000,00 insgesamt beschränkt.
c) Die Haftung für Vermögensschäden einschließlich mittelbarer Schäden und entgangenen Gewinn ist ausgeschlossen.

Die Haftungsbeschränkungen unter b) und der Haftungsausschluss unter c) gelten nicht, soweit bei Schäden an privat genutzten Sachen nach dem Produkthaftungsgesetz oder in Fällen des Vorsatzes oder der groben Fahrlässigkeit oder der Verletzung wesentlicher Vertragspflichten oder des Fehlens zugesicherter Eigenschaften für vertragstypisch vorhersehbare Schäden zwingend gehaftet wird.

9. Sonstiges, Erfüllungsort, Gerichtsstand

9.1. Mündliche Nebenabreden gelten nur dann als Vertragsbestandteil, wenn sie durch uns schriftlich bestätigt werden.

9.2. Sollte eine Klausel dieser Vertragsbedingungen ganz oder teilweise nichtig und/oder unwirksam sein, so werden die übrigen Bestimmungen hiervon nicht berührt. Eine unwirksame Bestimmung soll vielmehr durch eine ersetzt werden, die dem wirtschaftlich Gewollten am nächsten kommt.

9.3. Ist der Besteller Kaufmann, so ist München ausschließlicher Gerichtsstand. Der gleiche Gerichtsstand gilt, wenn der Besteller im Zeitpunkt der Einleitung eines gerichtlichen Verfahrens keinen allgemeinen Gerichtsstand in der Bundesrepublik Deutschland hat. Der Besteller ist jedoch berechtigt, jedes gesetzlich zuständige Gericht anzurufen.

9.4. Es gilt das Recht der Bundesrepublik Deutschland. Die Haager Konventionen vom 01.07.1964 betreffend einheitlicher Gesetze über den internationalen Kauf und das Übereinkommen der Vereinten Nationen vom 11.04.1980 über Verträge über den internationalen Kauf beweglicher Sachen finden keine Anwendung.

Stand: 12.07.2011

1. Allgemeines

1.1. Unsere Verkaufs- und Lieferbedingungen (nachfolgend Geschäftsbedingungen) gelten ausschließlich für alle unsere Geschäftsbeziehungen, die wir ab dem 01.01.2011 erstmalig, laufend und zukünftig mit Unternehmern im Sinne von § 14 BGB (nachfolgend Besteller) eingehen und zwar auch dann, wenn bei dem jeweiligen Abschluss nicht nochmals auf sie hingewiesen wird.
1.2. Von unseren Geschäftsbedingungen abweichende Bedingungen unseres Vertragspartners erkennen wird nicht an, es sei denn, wir haben ihrer Geltung ausdrücklich schriftlich zugestimmt.

2. Angebote, Bestellungen, Vertragsabschluss

2.1. Unsere Angebote sind grundsätzlich unverbindlich und freibleibend, es sei denn, sie sind ausdrücklich als verbindliche Angebote gekennzeichnet. Die Zusendung unserer Preisliste(n) ist nicht als Angebot anzusehen. Die in unserer Werbung und/oder in unseren Prospekten und sonstigen Verkaufsunterlagen enthaltenen technischen Daten, Verwendungszweckangaben und Produktabbildungen beinhalten kein Angebot auf Abschluss eines Garantievertrages im Sinne von § 443 BGB.
2.2. Die Bestellung einer Ware und/oder Leistung beinhaltet das verbindliche Angebot des Bestellers, die Ware/Leistung erwerben zu wollen. Wir sind berechtigt, das in der Bestellung liegende Vertragsangebot innerhalb von zwei Wochen nach Bestelleingang anzunehmen. Die Angebotsannahme kann von uns schriftlich oder durch Auslieferung/Ausführung der bestellten Ware/Leistung an den Besteller erfolgen. Wir behalten uns vor, Bestellungen nicht anzunehmen, auch ohne schriftliche Äußerung oder nähere Begründung. Unser Schweigen nach Ablauf der Annahmefrist gilt im Zweifel als Ablehnung.
2.3. Erfolgt die Bestellung auf elektronischem Wege, werden wir den Zugang der Bestellung umgehend bestätigen. Die Zugangsbestätigung stellt noch keine verbindliche Annahme der Bestellung dar, jedoch kann die Zugangsbestätigung unsererseits mit der Annahmeerklärung verbunden werden.
2.4. Im Falle von mündlich vereinbarten Verträgen wird der Leistungsumfang unserer Lieferungen durch unsere schriftliche Vertragsbestätigung festgelegt.

3. Lieferung

3.1. Teillieferungen oder Teilleistungen sind zulässig und verpflichten unseren Vertragspartner zur Zahlung der anteiligen Vergütung, es sei denn, dass die Teillieferung oder -leistung für ihn unzumutbar wäre.
3.2. Bei Lieferaufträgen auf Abruf gilt die gesamte Bestellmenge einen Kalendermonat nach Ablauf der für den Abruf vereinbarten Frist oder mangels einer vereinbarten Frist drei Kalendermonate nach Vertragsschluss als vom Besteller abgerufen.
3.3. Ist der Besteller zur Einteilung von Abrufkontingenten berechtigt und nimmt er die Einteilung nicht innerhalb von einem Kalendermonat nach Ablauf der jeweils vereinbarten Abruffrist oder mangels einer solchen Frist einen Monat nach Aufforderung durch uns nicht vor, dürfen wir die bestellte Gesamtmenge nach unserer Wahl einteilen, liefern und berechnen.
3.4. Unsere Lieferungen erfolgen „ab Werk München“ (EXW), sofern nicht ausdrücklich etwas anderes vereinbart ist. Die Verkäufer- und Käuferpflichten der Art und Weise der Lieferung bestimmen sich im Falle einer Lieferung „ab Werk“ nach den International Commercial Terms (INCOTERMS® 2010) in ihrer derzeitigen Fassung.
3.5. Die von uns angegebenen Liefer- und Leistungsfristen sind unverbindlich und freibleibend; sie können sich durch Verzögerung bei der Zulieferung, Produktion oder Störungen im Betriebsablauf verändern. Bei nachträglichen Vertragsänderungen oder -ergänzungen beginnen die Lieferfristen und -termine, auch wenn sie von uns zuvor bereits bestätigt worden waren, neu zu laufen bzw. verschieben sich entsprechend, soweit im jeweiligen Einzelfall mit dem Besteller keine hiervon abweichende Vereinbarung getroffen worden ist.
3.6. Geraten wir aus Gründen, die wir zu vertreten haben, in Lieferverzug, so ist unsere Haftung auf den vorhersehbaren, unmittelbaren Durchschnittsschaden begrenzt.

4. Annahmeverzug

4.1. Kommt der Besteller in Annahmeverzug oder verletzt er sonstige Mitwirkungspflichten, so sind wir unbeschadet unserer Rechte nach Ziffer 3.2 und 3.3. berechtigt, nach unserer Wahl vom Vertrag zurückzutreten und den uns dadurch entstehenden Schaden, einschließlich der Mehraufwendungen, zu verlangen.
4.2. Im Falle des Annahmeverzugs geht auch die Gefahr des zufälligen Untergangs oder einer zufälligen Verschlechterung der gelieferten Sache in dem Zeitpunkt auf den Besteller über, in dem dieser in Annahmeverzug gerät.

5. Preise und Zahlungen

5.1. Unsere Preise verstehen sich grundsätzlich in EURO netto Kasse, ab Werk/Lager München, zzgl. Versand- und Verpackungskosten, sofern nichts anderes schriftlich vereinbart ist. Gesetzliche Abgaben, Zölle und Steuern sind in der jeweils bei Rechnungsstellung geltenden Höhe gesondert zu entrichten.
5.2 Im Falle einer Einzelbestellung im Netto-Warenwert von weniger als € 100,00 sind wir berechtigt, zusätzlich zu unseren Preisen einen Mindermengenzuschlag von € 30,00 zu berechnen.
5.3. Unsere Preise gelten vom Tage des Vertragsabschlusses an für sechs Wochen. Die vereinbarten Preise gelten nur für den jeweils geschlossenen Auftrag.
5.4. Preisänderungen sind zulässig, wenn zwischen Vertragsabschluß und vereinbartem Liefertermin mehr als sechs Wochen liegen. Erhöhen sich danach bis zur Fertigstellung der Lieferung die Löhne, Materialkosten oder die marktmäßigen Einstandspreise (Listenpreise) oder verändern sich die Wechselkurse, so sind wir berechtigt, den Preis angemessen entsprechend den Kostensteigerungen zu erhöhen.
5.5. Die ersten drei Lieferungen erfolgen nur gegen Nachnahme. Darüber hinausgehende Folgelieferungen betreffend sind unsere Rechnungen binnen 30 Tagen netto Kasse nach Rechnungsstellung oder einer gleichwertigen Zahlungsaufstellung zur Zahlung ohne jeden Abzug fällig.
5.6. Zahlungsfristen gelten als eingehalten, wenn wir innerhalb der Frist über den Betrag verfügen können. An unsere Vertreter und/oder Beauftragte kann mit befreiender Wirkung nur bezahlt werden, wenn diese eine schriftliche Inkassovollmacht nachweisen.
5.7. Kommt der Besteller mit seiner Zahlungspflicht ganz oder teilweise in Verzug, so hat er – unbeschadet unserer sonstigen weiteren Rechte – ab diesem Zeitpunkt Verzugszinsen in Höhe von jährlich 5 Prozentpunkten über dem Basiszinssatz der Europäischen Zentralbank zu zahlen, soweit wir nicht einen höheren Schaden nachweisen.
5.8. Für jede schriftliche Mahnung einer Rechnung, die nach Verzugseintritt erfolgt, sind wir berechtigt eine Bearbeitungspauschale von € 5,00 zu verlangen.
5.9. Eine Aufrechnung oder Zurückbehaltung des Bestellers ist ausgeschlossen, es sei denn die Aufrechnung- oder Zurückbehaltungsforderung ist unbestritten oder rechtskräftig festgestellt. Wir sind berechtigt, die Ausübung des Zurückbehaltungsrechts durch Sicherheitsleistung – auch ohne Bürgschaft – abzuwenden.
5.10. Stellt der Besteller seine Zahlungen ein, liegt eine Überschuldung vor oder wird die Eröffnung eines Insolvenzverfahrens beantragt oder kommt der Besteller mit der Einlösung fälliger Wechsel oder Schecks in Verzug, so wird unsere Gesamtforderung sofort fällig. Dasselbe gilt bei einer sonstigen wesentlichen Verschlechterung der wirtschaftlichen Verhältnisse des Bestellers. Wir sind in diesen Fällen berechtigt, ausreichende Sicherheitsleistung zu verlangen und vom Vertrag zurückzutreten.

6. Eigentumsvorbehalt
6.1. Die Waren bleiben unser Eigentum bis zur Erfüllung sämtlicher uns gegen den Besteller zustehenden Ansprüche (Vorbehaltsware), auch wenn einzelne Ware bezahlt worden ist. Eine Verpfändung oder Sicherungsübereignung der Vorbehaltsware ist nicht zulässig.
6.2. Der Besteller tritt für den Fall der – im Rahmen des ordnungsgemäßen Geschäftsbetriebes zulässigen – Weiterveräußerung oder Weitergabe der Vorbehaltsware an uns schon jetzt bis zur Tilgung sämtlicher unserer Forderungen die ihm aus der Weiterveräußerung oder Weitergabe entstehenden künftigen Forderungen gegen seine Kunden sicherheitshalber ab, ohne dass es noch späterer besonderer Erklärungen bedarf; die Abtretung erstreckt sich auch auf Saldoforderungen, die sich im Rahmen bestehender Kontokorrentverhältnisse oder bei Beendigung derartiger Verhältnisse des Bestellers mit seinen Kunden ergeben. Wird die Vorbehaltsware zusammen mit anderen Gegenständen weiterveräußert oder weitergegeben, ohne dass für die Vorbehaltsware ein Einzelpreis vereinbart wurde, so tritt der Besteller an uns mit Vorrang vor den übrigen Forderungen denjenigen Teil der Gesamtpreisforderung bzw. der für die Weitergabe erzielten Gesamtforderung ab, der dem von uns in Rechnung gestellten Wert der Vorbehaltsware entspricht. Bis auf Widerruf ist der Besteller zur Einziehung der abgetretenen Forderungen aus der Weiterveräußerung oder Weitergabe befugt; er ist jedoch nicht berechtigt, über sie in anderer Weise, z.B. durch Abtretung, zu verfügen.

YAMAICHI ELECTRONICS
Deutschland GmbH
Concor Park
Bahnhofstraße 20
85609 Aschheim-Dornach
Germany

Phone +49 (0)89 45109-0
Fax +49 (0)89 45109-110
E-Mail info@yamaichi.de
Web www.yamaichi.eu

YAMAICHI ELECTRONICS
Italia s.r.l.
Centro Direzionale Colleoni
Via Colleoni, 1
Palazzo Taurus Ing. 1
20864 Agrate Brianza (MB)
Italy

Phone +39 039 6881-185
Fax +39 039 6892-150
E-Mail sales@yamaichi.it
Web www.yamaichi.eu

YAMAICHI ELECTRONICS
GB Ltd.
6 The Clockhouse
Stratton Park
Micheldever
Hampshire SO21 3DP
Great Britain

Phone +44 (0)7808 493377
Fax +44 (0)1962 774902
E-Mail sales@yamaichi.co.uk
Web www.yamaichi.eu

Version Feb. 2013